ABBREVIATIONS

A/C	AIR CONDITIONING
ACT	ACOUSTICAL CEILING TILE
ADJ	ADJUSTABLE
AFF	ABOVE FINISHED FLOOR
AMP	AMPERE
ARCH	ARCHITECT
BOH	BACK OF HOUSE
CAB	CABINET
CFMF	COLD-FORMED METAL FRAMING
CL	CENTER LINE
CLG	CEILING
CM	STARBUCKS CONSTRUCTION MANAGER
CTR	CENTER
CX	COMMISSIONING
CXA	COMMISSIONING AGENT
DEG	DEGREE
DET	DETAIL
DIA	DIAMETER
DIM	DIMENSION
DM	STARBUCKS DESIGN MANAGER
DN	DOWN
EA	EACH
EL	ELEVATION
EQ	EQUAL
EXIST	EXISTING
EXT	EXTERIOR
FF&E	FURNITURE, FIXTURE, AND EQUIPMENT
FLR	FLOOR
FOH	FRONT OF HOUSE
FOIC	FURNISHED BY OWNER, INSTALLED BY CONTRACTOR
FOIO	FURNISHED BY OWNER INSTALLED BY OWNER
FT	FOOT/FEET
G	GROUND
GC	GENERAL CONTRACTOR
GWB	GYPSUM WALLBOARD
HC	HOLLOW CORE
HDW	HARDWARE
HM	HOLLOW METAL
HOP	HANDOFF PLANE
HORIZ	HORIZONTAL
HR	HOUR
HT	HEIGHT
HVAC	HEATING, VENTILATING AND AIR CONDITIONING
I.D.	INSIDE DIAMETER
LEED	LEADERSHIP IN ENERGY AND ENVIRONMENTAL DESIGN
LL	LANDLORD
LV	LOW VOLTAGE
MAX	MAXIMUM
MEP	"MECHANICAL, ELECTRICAL AND PLUMBING"
MFR	MANUFACTURER
MIN	MINIMUM
MOP	MOBILE ORDER PICK UP
NIC	NOT IN CONTRACT
NL	NIGHT LIGHT
NTS	NOT TO SCALE
OC	ON CENTER
O.D.	OUTSIDE DIAMETER
PIR	PASSIVE INFRARED SENSOR
PLC	PLACE
R	RADIUS
REF	REFERENCE
REQ'D	REQUIRED
REV	REVISION
RND	ROUND
SB	STARBUCKS
SC	SOLID CORE
SF	SQUARE FEET
SHT	SHEET
SIM	SIMILAR
SS	SOLID SURFACING MATERIAL
SST	STAINLESS STEEL
SPEC	SPECIFICATION
SQ	SQUARE
TEMP	TEMPORARY
TYP	TYPICAL
UC	UNDER COUNTER
UNO	UNLESS NOTED OTHERWISE
VERT	VERTICAL
VIF	VERIFY IN FIELD

RESPONSIBILITY LEGEND

GC	GENERAL CONTRACTOR
LL	LANDLORD
SB	STARBUCKS
CV	CASEWORK VENDOR

ARCHITECTURAL SYMBOL LEGEND

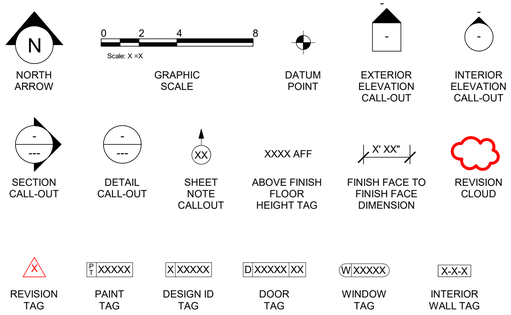

AERIAL MAP

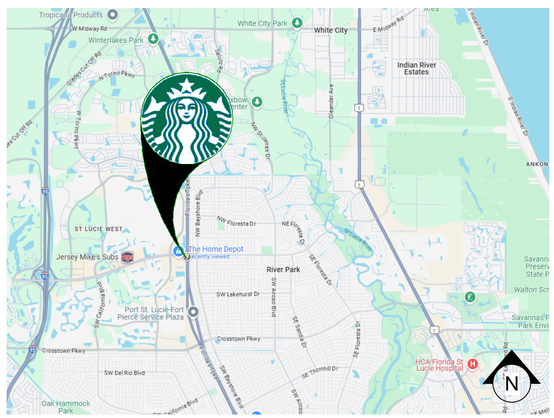

VICINITY PLAN

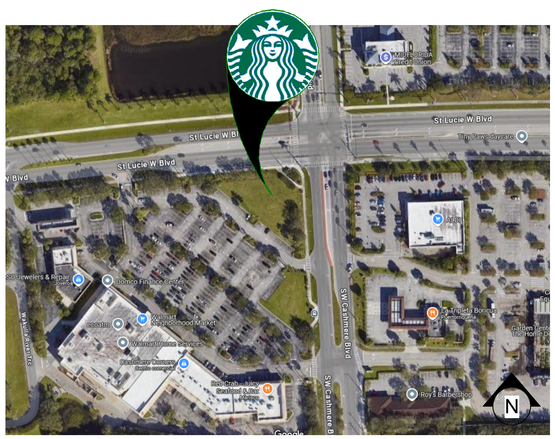

PROJECT CONTACTS

MAILING ADDRESS:	STARBUCKS COFFEE COMPANY 2401 UTAH AVENUE SOUTH MS STOP: S-SD10 SEATTLE, WASHINGTON 98134 (206) 318-1575
DESIGN MANAGER:	ASHLEY SUEIRAS STARBUCKS COFFEE COMPANY 99 MERRICK WAY, SUITE 650 CORRAL GABLES, FL 33134 (305) 529-5359 PHONE ASUEIRAS@STARBUCKS.COM
DESIGN & SUBMITTALS:	CARLOS CAMPOS GENSLER AVENIDA ESCAZU TORRE LEXUS, NIVEL 7 SAN JOSE, COSTA RICA CARLOS_CAMPOS@GENSLER.COM SE_SUBMITTALS@GENSLER.COM
CONSTRUCTION MANAGER:	ROD MURPHY STARBUCKS COFFEE COMPANY RMURPHYJ@STARBUCKS.COM 321.200.2686 PHONE
LANDLORD:	REGENCY CENTERS 2700 N. MILITARY TRAIL, SUITE 380 BOCA RATON, FL 33431 561-630-2314 VALENTINAPEREZ@REGENCYCENTERS.COM
ARCHITECT OF RECORD:	M. ARTHUR GENSLER JR. & ASSOCIATES FL. LIC. N AR96486 545 NW 26TH ST. SUITE 250 MIAMI, FLORIDA 33127 CONTACT: PABLO G. GARCÍA SBUX-SUBMITTALS@GENSLER.COM
MEP CONSULTANT OF RECORD:	ADAM PULSKAMP COLUMBUS REGIONAL MANAGER KLH ENGINEERS, PSC (614) 603-2662 PHONE EMAIL: APULSKAMP@KLHENGRS.COM
STRUCTURAL CONSULTANT:	BLISS & NYITRAY, INC 10440 N. CENTRAL EXPRESSWAY SUITE 1530 DALLAS, TX 75231, USA (214) 432-8232 PHONE CONTACT: ADAM R. PHELPS A-PHELPS@BNIENGINEERS.COM

SCOPE OF WORK

SINGLE-TENANT INFILL OF AN EXISTING SINGLE-TENANT BUILDING TO INCLUDE:

1. INTERIOR PARTITIONS, RESTROOMS, FINISHES, FURNITURE AND SPECIAL EQUIPMENT.
2. EXTERIOR PATIO FURNITURE.

CLASSIFICATION OF WORK: ALTERATION - LEVEL 2, PER FBC 2023 EXIST. BUILDING SECTION 404.

BUILDING INFORMATION

OCCUPANCY TYPE:	A2
TYPE OF USE:	CAFETERIA / SIMILAR DINING FACILITIES
NUMBER OF STORIES:	01
BUILDING AREA:	2,322 SQ.FT.
TENANT AREA:	2,322 SQ.FT. (ENCLOSED) + 539 SQ.FT. (PATIO)
TYPE OF CONSTRUCTION:	II-B, UNSPRINKLERED
INTERIOR FINISHES	WALLS AND CEILING (CLASS C) FLOORS (CLASS C) FURNITURE, CASEWORK, FABRIC (CLASS C)
FIRE SPRINKLER:	NO
FIRE ALARM:	NO
EXTERIOR SEASONAL SEATING:	28 SEATS
INTERIOR SEATING:	36 SEATS

LL PROJECT NUMBER
P24-148

LANDLORD SHELL PERMIT NUMBER -
2525347

GENERAL NOTES

1. THE DRAWINGS AND PROJECT MANUAL TOGETHER CONSTITUTE THE CONTRACT DOCUMENTS FOR CONSTRUCTION. ALL GENERAL REQUIREMENTS ARE TO BE MET AND ALL MATERIALS, FINISHES AND SYSTEMS ARE TO BE INSTALLED AND PERFORM PER SPECIFICATIONS UNLESS OTHERWISE NOTED.
2. GENERAL CONTRACTOR SHALL VISIT THE SITE, REVIEW THE BUILDING SHELL DRAWINGS AS SUBMITTED BY THE LANDLORD OR STARBUCKS AND BECOME THOROUGHLY FAMILIAR WITH THE SITE CONDITIONS PRIOR TO CONSTRUCTION.
3. GENERAL CONTRACTOR SHALL CONSULT WITH STARBUCKS CONSTRUCTION MANAGER TO RESOLVE ANY CHANGES, OMISSIONS OR PLAN DISCREPANCIES PRIOR TO CONSTRUCTION.
4. ALL WORK SHALL BE PERFORMED IN STRICT COMPLIANCE WITH LOCAL, COUNTY, STATE AND FEDERAL CODES AND ORDINANCES.
5. GENERAL CONTRACTOR SHALL VERIFY THE LOCATION OF ALL UTILITIES.
6. GENERAL CONTRACTOR TO VERIFY ALL DIMENSIONS, INCLUDING CLEARANCES REQUIRED BY OTHER TRADES AND NOTIFY STARBUCKS CONSTRUCTION MANAGER OF ANY DISCREPANCIES PRIOR TO PROCEEDING WITH THE WORK. ALL DIMENSIONS ARE TO THE FACE OF THE FINISHED SURFACE UNLESS NOTED OTHERWISE. ALL DIMENSIONS TO BE TAKEN FROM DESIGNATED DATUM POINT. DO NOT SCALE DRAWINGS.
7. GENERAL CONTRACTOR SHALL PATCH AND REPAIR ALL EXISTING WALLS, FLOORS, CEILINGS, OR OTHER SURFACES IDENTIFIED TO REMAIN THAT MAY BECOME DAMAGED DURING THE COURSE OF THE WORK.
8. THE GENERAL CONTRACTOR IS RESPONSIBLE FOR OBTAINING PERMITS FOR FIRE PROTECTION, PLUMBING, MECHANICAL, AND ELECTRICAL SYSTEMS PRIOR TO INSTALLATION OF SUCH SYSTEMS.
9. GENERAL CONTRACTOR SHALL RETAIN ONE SET OF PERMIT PLANS ON-SITE TO DOCUMENT ALL CHANGES MADE DURING CONSTRUCTION. THE RECORD DRAWINGS SHALL BE ISSUED TO THE OWNER AT PROJECT CLOSE-OUT AS DESCRIBED IN THE GENERAL REQUIREMENTS OF THE PROJECT MANUAL.
10. GENERAL CONTRACTOR IS RESPONSIBLE FOR COORDINATING DELIVERY OF MATERIALS FROM STARBUCKS CONTRACTED THIRD PARTY LOGISTICS DISTRIBUTION SERVICES AND VENDOR DIRECT SHIPMENTS. SEE THE PROJECT MANUAL FOR ADDITIONAL INFORMATION.
11. RESPONSIBILITY FOR SUPPLY AND DELIVERY OF MATERIALS AND EQUIPMENT IS IDENTIFIED IN THE DRAWING SCHEDULE SHEETS UNDER THE COLUMN LABELED "RESPONSIBILITY".
12. FOR THE PURPOSE OF THE DOCUMENTS, TO "INSTALL", SHALL MEAN TO PROVIDE ALL FASTENERS, MISCELLANEOUS HARDWARE, BLOCKING, ELECTRICAL CONNECTIONS, PLUMBING CONNECTIONS AND OTHER ITEMS REQUIRED FOR A COMPLETE AND OPERATIONAL INSTALLATION, UNLESS OTHERWISE NOTED.
13. ALL ITEM SUBSTITUTIONS MUST BE APPROVED BY THE STARBUCKS CONSTRUCTION MANAGER.
14. STARBUCKS WILL PROVIDE THE PROJECT MANUAL AND SPECIFICATIONS FOR THIS PROJECT.

APPLICABLE CODES

FLORIDA BUILDING CODES		
FBC	BUILDING, 8TH EDITION	2023
FBCEB	EXISTING BUILDING, 8TH EDITION	2023
FBCEC	ENERGY CONSERVATION, 8TH EDITION	2023
FBCP	PLUMBING, 8TH EDITION	2023
FBCM	MECHANICAL, 8TH EDITION	2023
FFPC	FLORIDA FIRE PREVENTION CODE, 8TH...	2023
NATIONAL FIRE PROTECTION ASSOCIATION		
NPFA 1	FIRE CODE, FLORIDA FIRE PREVENTION CODE, 8TH EDITION	2021
NFPA 101	LIFE SAFETY CODE, FLORIDA FIRE PREVENTION CODE, 8TH EDITION	2021
NFPA-70 (NEC)	NATIONAL ELECTRICAL CODE	2020
ACCESSIBILITY GUIDELINES		
ADA	ADA STANDARDS FOR ACCESSIBLE DESIGN BY THE U.S. DEPARTMENT OF JUSTICE	2010
FBCA	ACCESSIBILITY, 8TH EDITION	2023
ICC/ANSI 117.1	ACCESSIBLE AND USABLE BUILDINGS AND FACILITIES	2017
ADDITIONAL GUIDELINES		
ASHRAE 90.1	ANSI/ASHRAE/IES STANDARD 90.1	2016

ZONING INFORMATION

ZONING:

PARCEL NUMBER:	3430-602-0001-000-5
LEASABLE AREA:	2,322 SQ.FT.
PROPOSED USE:	RESTAURANT (COFFEE SHOP) / RETAIL SALES AND SERVICES
ZONNING TYPE:	GENERAL COMMERCIAL

JURISDICTION:

CITY OF PORT ST. LUCIE PLANNING & ZONING DEPARTMENT
121 SW PORT ST. LUCIE BLVD., BUILDING B
PORT ST. LUCIE, FL 34984
(772) 871-5124

DEFERRED SUBMITTALS:	LOW VOLTAGE SIGNAGE
SEPARATE PERMIT:	SIGNAGE

INDEX OF SHEETS

LEGEND: X - SHEET ISSUED
R - SHEET ISSUED FOR REFERENCE AND COORDINATION ONLY

SHEET	SHEET TITLE	CRS REV	PERMIT	REV 1	REV 2	REV 3	REV 4
GENERAL							
G001	GENERAL INFORMATION	X	X				
G002	LIFE SAFETY PLAN	X	X				
G003	FOOD SERVICE PLAN AND ACCESSIBILITY PLAN	X	X				
G004	ACCESSIBILITY GUIDELINES	X	X				
G004.1	ACCESSIBILITY GUIDELINES	X	X				
G005	PERSPECTIVE VIEWS	X	X				
G005.1	RENDERS	X	X				
G006	SCOPE OF WORK	X	X				
ARCHITECTURAL							
A001	APPROVED SITE PLAN	X	X				
A101	BUILDING FLOOR PLAN	X	X				
A102	BUILDING FLOOR PENETRATION PLAN	X	X				
A301	BUILDING SECTIONS	X	X				
A501	WALL FRAMING DETAILS	X	X				
A502	WALL FRAMING DETAILS	X	X				
A504	MENU DETAILS	X	X				
A602	WINDOW AND DOOR SCHEDULES & DETAILS	X	X				
INTERIORS							
I101	FF & E PLAN	X	X				
I102	CASEWORK PLAN	X	X				
I102.1	ADAPTABLE CASEWORK BASE PLAN	X	X				
I102.2	ADAPTABLE CASEWORK FRAMEWORK PLAN	X	X				
I102.3	ADAPTABLE CASEWORK CABINET PLAN	X	X				
I102.4	ADAPTABLE CASEWORK COUNTERTOP PLAN	X	X				
I103	REFLECTED CEILING PLAN	X	X				
I103.1	DIMENS. REFLECTED CEILING PLAN	X	X				
I104	FLOOR FINISH PLAN	X	X				
I105	WALL FINISH PLAN	X	X				
I201	INTERIOR FINISH ELEVATIONS	X	X				
I202	INTERIOR FINISH ELEVATIONS	X	X				
I203	INTERIOR FINISH ELEVATIONS	X	X				
I204	INTERIOR FINISH ELEVATIONS	X	X				
I401	RESTROOM PLAN & ELEVATIONS	X	X				
I501	ADAPTABLE CASEWORK DETAILS	X	X				
I502	CASEWORK DETAILS	X	X				
I503	CASEWORK DETAILS	X	X				
I504	IMPULSE FIXTURE DETAILS	X	X				
I505	RCP DETAILS	X	X				
I506	RCP DETAILS	X	X				
I507	FLOOR FINISH DETAILS	X	X				
I508	FLOOR FINISH DETAILS	X	X				
I509	WALL FINISH DETAILS	X	X				
I510	WALL FINISH DETAILS	X	X				
I511	ARTWORK	X	X				
I512	ARTWORK	X	X				
I513	ARTWORK	X	X				
I514	CUSTOM CBE SHELVES	X	X				
I515	CUSTOM BANQUETTE	X	X				
I516	CUSTOM COMMUNITY TABLE	X	X				
I517	CUSTOM MERCH	X	X				
I601	CASEWORK AND FF&E SCHEDULES	X	X				
I602	INTERIOR FINISHES SCHEDULES	X	X				
I603	INTERIOR FINISHES SCHEDULES	X	X				
STRUCTURAL							
S1.00	STRUCTURAL NOTES	X	X				
S1.01	STRUCTURAL PLAN SPECIFICATIONS	X	X				
S2.00	SLAB ON GRADE PLAN & DETAILS	X	X				
S3.00	LIGHT GUAGE PLAN & DETAILS	X	X				
S3.01	LIGHT GUAGE DETAILS	X	X				
ELECTRICAL							
E001	ELECTRICAL NOTES	X	X				
E002	ENERGY NOTES	X	X				
E003	ENERGY CODE CALCULATIONS	X	X				
E004	ELECTRICAL SITE PLAN	X	X				
E005	ELECTRICAL OUTLINE SPECIFICATIONS	X	X				
E006	ELECTRICAL OUTLINE SPECIFICATIONS	X	X				
E101	POWER PLAN	X	X				
E102	LIGHTING PLAN	X	X				
E103	ELECTRICAL ROOF PLAN	X	X				
E104	ELECTRICAL UNDERSLAB PLAN	X	X				
E501	ELECTRICAL DETAILS	X	X				
E502	ELECTRICAL DETAILS	X	X				
E503	ELECTRICAL DETAILS	X	X				
E504	ELECTRICAL DETAILS	X	X				
E505	ELECTRICAL SINGLE LINE	X	X				
E506	ELECTRICAL PANEL SCHEDULES	X	X				
MECHANICAL							
M001	MECHANICAL NOTES	X	X				
M002	MECHANICAL NOTES Copy 1	X	X				
M003	MECHANICAL OUTLINE SPECIFICATIONS	X	X				
M004	MECHANICAL OUTLINE SPECIFICATIONS	X	X				
M005	MECHANICAL ENERGY CODE CALCULATIONS	X	X				
M006	MECHANICAL ENERGY CODE CALCULATIONS	X	X				
M101	MECHANICAL DESIGN PLAN	X	X				
M102	MECHANICAL ROOF PLAN	X	X				
M501	MECHANICAL DETAILS	X	X				
M601	MECHANICAL SCHEDULES	X	X				
PLUMBING							
P001	PLUMBING NOTES	X	X				
P002	PLUMBING NOTES	X	X				
P003	PLUMBING OUTLINE SPECIFICATIONS	X	X				
P101	PLUMBING SUPPLY PLAN	X	X				
P102	PLUMBING WASTE & VENT PLAN	X	X				
P501	PLUMBING DETAILS	X	X				
P502	PLUMBING DETAILS	X	X				
P503	PLUMBING DETAILS	X	X				
P505	PLUMBING DETAILS	X	X				
P601	PLUMBING SCHEDULES	X	X				
P901	PLUMBING WASTE AND VENT RISER	X	X				
P902	PLUMBING SUPPLY RISER	X	X				

PERMIT SET - FOR CONSTRUCTION USE

© 2022 STARBUCKS COFFEE COMPANY

STARBUCKS®
2401 UTAH AVENUE SOUTH
SEATTLE, WASHINGTON 98134
(206) 318-1575

THESE DRAWINGS AND THE PROJECT MANUAL ARE CONFIDENTIAL AND SHALL REMAIN THE SOLE PROPERTY OF STARBUCKS CORPORATION, WHICH IS THE OWNER OF THE COPYRIGHT IN THIS WORK. THEY SHALL NOT BE REPRODUCED (IN WHOLE OR IN PART), SHARED WITH THIRD PARTIES OR USED IN ANY MANNER ON OTHER PROJECTS OR EXTENSIONS TO THIS PROJECT WITHOUT THE PRIOR WRITTEN CONSENT OF STARBUCKS CORPORATION. THESE DRAWINGS AND SPECIFICATIONS ARE INTENDED TO EXPRESS DESIGN INTENT FOR A PROTOTYPICAL STARBUCKS STORE (WHICH IS SUBJECT TO CHANGE AT ANYTIME) AND DO NOT REFLECT ACTUAL SITE CONDITIONS. NEITHER PARTY SHALL HAVE ANY OBLIGATION NOR LIABILITY TO THE OTHER (EXCEPT STATED ABOVE) UNTIL A WRITTEN AGREEMENT IS FULLY EXECUTED BY BOTH PARTIES.

STARBUCKS TEMPLATE VERSION: i2023.04.24

PABLO GARCIA, AIA, REG. FL NO. AR99297

Gensler

MAIN OFFICE
M. ARTHUR GENSLER JR. & ASSOCIATES
220 MONTGOMERY STREET, SUITE 200
SAN FRANCISCO, CA 94104 USA
Tel (415) 433.3700
Fax (415) 836.4599

SATELLITE OFFICE
M. ARTHUR GENSLER JR. & ASSOCIATES
FL QUALIFIER'S LIC. NO. AR96486
545 NW 26TH ST
SUITE 250
MIAMI, FL 33127 USA
Tel (305) 350.7070
Fax (305) 350.7071

PROJECT NAME:
ST LUCIE WEST & SW CASHEMERE BLVD

PROJECT ADDRESS:
920 SW SAINT LUCIE BLVD, PORT ST.LUCIE, FL 34986

STORE #:	81616
PROJECT #:	101357-001
ISSUE DATE:	07-08-2025
DESIGN MANAGER:	ASHLEY SUEIRAS
PRODUCTION DESIGNER:	GENSLER
CHECKED BY:	GENSLER

Revision Schedule

Rev	Date	By	Description

SHEET TITLE:
GENERAL INFORMATION

SCALE: AS SHOWN

SHEET NUMBER:
G001

INDOOR SEATING CALCULATIONS

DESCRIPTION	NUMBER OF ITEMS	SEATS	PER ITEM
BANQUETTE	1	9 SEATS	9
TABLE TOPS AT BANQUETTE	3	1 SEATS	3
COMMUNITY TABLE	1	8 SETAS	8
TABLE 3TOP, ROUND	2	3 SEATS	6
TABLE 2TOP, ROUND	2	2 SEATS	4
SOFT SEATING	9	1 SEATS	9
		TOTAL ACCESSIBLE SEATS (≥ 5%)	2
		TOTAL	39

OUTDOOR SEATING CALCULATIONS

DESCRIPTION	NUMBER OF ITEMS	SEATS	PER ITEM
TABLE TOP, SQUARE	6	2 SEATS	12
TABLE TOP, ROUND	4	2 SEATS	8
COMMUNITY TABLE	1	6 SEATS	6
		TOTAL ACCESSIBLE SEATS (≥ 5%)	2
		TOTAL	26

EGRESS CALCULATIONS

EXIT WIDTH REQUIRED - 79 OCC. x 0.2	= 15.8 IN.
EXIT WIDTH PROVIDED	= 142 IN.
EXITS	= 68 IN. PRIMARY ENTRY, 34 IN. SECONDARY ENTRY, 40 IN WORKROOM
NUMBER OF EXITS REQUIRED	= 2
NUMBER OF EXITS PROVIDED	= 3
MAXIMUM. ALLOWABLE TRAVEL DISTANCE	= 200' - 00" (WITHOUT SPRINKLER, PER TABLE 1017.2)
MAXIMUM. TRAVEL DISTANCE PROVIDED	= 88' - 0"
MAXIMUM ALLOWABLE COMMON PATH OF EGRESS	= 75' - 00" (WITHOUT SPRINKLER, PER TABLE 1006.2.1)
MAXIMUM COMMON PATH OF EGRESS PROVIDED	= 46' 00"
MINIMUM. EXIT SEPARATION	= 67' - 10" (MAXIMUM DIAGONAL) / 2 = 33' - 11"
EXIT SEPARATION PROVIDED	= 35' - 3"

PLUMBING FIXTURE CALCULATIONS

2023 FLORIDA BUILDING CODE - PLUMBING, TABLE 403.1.

OCCUPANCY	MALE	FEMALE	TOTAL	79 OCCUPANTS + 26 EXTERIOR SEATS = 105 OCCUPANTS			
	40 OCC.	39 OCC.	79 OCC.***				
FIXTURES	WATER CLOSETS			LAVATORY		WATER FOUNTAIN**	OTHER
	1 PER 75			1 PER 200		1 PER 500	1 SERVICE SINK
	REQUIRED	1 M	1 F	1 M	1 F	1**	1
	PROVIDED	1 M	1 F	1 M	1 F	0	1

*IN EACH BATHROOM OR TOILET ROOM, URINALS SHALL NOT BE SUBSTITUTED FOR MORE THAN 67% OF THE REQUIRED WATER CLOSETS IN ASSEMBLY OCCUPANCIES.

**RETAIL ESTABLISHMENT SERVES WATER UPON REQUEST.

***OCCUPANT TOTAL INCLUDES 26 PATIO OCCUPANTS.

ROOM SCHEDULE

NAME	AREA
INTERIOR	
BAR	561 SF
CAFE SEATING	817 SF
CAFE STANDING	36 SF
FIXED SEATING	29 SF
MEN'S	64 SF
PARTNER'S AREA	139 SF
VESTIBULE	50 SF
WOMEN'S	66 SF
WORKROOM	561 SF
	2322 SF
GRAND TOTAL	2322 SF

OCCUPANCY CALCULATIONS

TYPE	Name	AREA	LINEAR	OCC. FACTOR	OCC. LOAD
INTERIOR					
A-2	BAR	561 SF		200	3
A-2	CAFE SEATING	817 SF		15	55
A-2	CAFE STANDING	36 SF		5	8
A-2	FIXED SEATING	29 SF	145 in	18	9
A-2	MEN'S	64 SF		0	0
A-2	PARTNER'S AREA	139 SF		200	1
A-2	VESTIBULE	50 SF		0	0
A-2	WOMEN'S	66 SF		0	0
A-2	WORKROOM	561 SF		200	3
		2322 SF			79
INTERIOR + EXTERIOR OCC. TOTAL		2322 SF			79

FUNCTION OF SPACE LEGEND

- ASSEMBLY USE - FIXED SEATING
- ASSEMBLY USE - STANDING SPACE
- ASSEMBLY USE - UNCONCENTRATED USE (TABLES AND CHAIRS, WITHOUT FIXED SEATS)
- ASSEMBLY USE - UNOCCUPIED
- KITCHENS, COMMERCIAL

NOTE:

TOTAL OCCUPANT LOAD (**INTERIOR + EXTERIOR**) IS USED FOR PLUMBING FIXTURE CALCULATIONS ONLY.

MEANS OF EGRESS NOTES

A. EVERY ROOM OR SPACE THAT IS ASSEMBLY OCCUPANCY SHALL HAVE THE OCCUPANT LOAD OF THE ROOM OR SPACE POSTED IN A CONSPICUOUS PLACE, NEAR THE MAIN EXIT ACCESS DOORWAY. POSTED SIGNS SHALL BE OF AN APPROVED LEGIBLE PERMANENT DESIGN AND SHALL BE MAINTAINED BY THE OWNER AUTHORIZED AGENT. (1004.3)

B. EGRESS SHALL NOT PASS THROUGH KITCHENS, STORAGE ROOMS, CLOSETS OR SIMILAR SPACES. (1014.2)

C. PANIC AND FIRE EXIT HARDWARE, WHERE INSTALLED ON DOORS IN THIS BUILDING SHALL SATISFY THE FOLLOWING (1008.1.10):

1) THE ACTUATION PORTION OF THE RELEASING DEVICE SHALL EXTEND AT LEAST ONE-HALF OF THE DOOR LEAF WIDTH.

2) THE MAXIMUM UNLATCHING FORCE DOES NOT EXCEED 15 POUNDS (6.8 KG).

3) PIVOTED OR BALANCED DOORS SHALL BE OF THE PUSH-PAD TYPE WHERE PANIC HARDWARE IS REQUIRED AND THE PAD SHALL NOT EXTEND ACROSS MORE THAN ONE-HALF OF THE DOOR WIDTH, MEASURED FROM THE LATCH SIDE.

4) PANIC HARDWARE LISTED IN ACCORDANCE WITH UL 305.

5) FIRE EXIT HARDWARE LISTED IN ACCORDANCE WITH UL 10C AND UL 305.

D. STRUCTURAL ELEMENTS, FIXTURES OR FURNISHINGS SHALL NOT PROJECT HORIZONTALLY FROM EITHER SIDE MORE THAN 4 INCHES (100 MM) OVER ANY WALKING SURFACE BETWEEN 27 INCHES (685 MM) AND 80 INCHES (2030 MM) ABOVE THE WALKING SURFACE. EXCEPTION: HANDRAILS SERVING STAIRS AND RAMPS ARE PERMITTED TO PROTRUDE 4 1/2 INCHES (115 MM) FROM THE WALL. (1003.3.3)

E. THE PATH OF EGRESS TRAVEL EXITS AND WITHIN EXITS IN THIS BUILDING SHALL BE IDENTIFIED BY EXIT SIGNS CONFORMING TO THE REQUIREMENTS OF SECTION 1011 AND AS NOTED BELOW:

1) EXIT SIGNS SHALL BE READILY VISIBLE FROM ANY DIRECTION OF EGRESS TRAVEL.

2) EXIT SIGNS SHALL BE LOCATED AS NECESSARY TO CLEARLY INDICATE THE DIRECTION OF EGRESS TRAVEL.

3) NO POINT IN A CORRIDOR SHALL BE MORE THAN 100 FT (30.5 M) OR THE LISTED VIEWING DISTANCE FOR THE SIGN, WHICHEVER IS LESS, FROM THE NEAREST VISIBLE EXIT SIGN.

F. WHERE KEY OPERATED LOCKING DEVICES ARE USED, POST A SIGN ON OR ADJACENT TO THE REQUIRED MAIN EXIT DOOR WITH 1 INCH (25 MM) LETTERING STATING THAT "THIS DOOR TO REMAIN UNLOCKED WHEN BUILDING IS OCCUPIED". (1008.1.9.3)

G. EGRESS DOORS OR GATES SHALL BE OPENABLE FROM THE EGRESS SIDE WITHOUT THE USE OF A KEY, SPECIAL KNOWLEDGE OR EFFORT. DOOR HANDLES, PULLS, LATCHES, LOCKS AND OTHER OPERATING DEVICES SHALL BE INSTALLED 34 INCHES (860 MM) TO 48 INCHES (1220 MM) ABOVE FINISHED FLOOR. MANUALLY OPERATED FLUSH BOLTS OR SURFACE BOLTS ARE NOT PERMITTED. THE UNLATCHING OF ANY DOOR OR LEAF SHALL NOT REQUIRE MORE THAN ONE OPERATION. (1008.1.9)

H. LANDINGS SHALL BE PROVIDED ON EACH SIDE OF DOORS AND SUCH LANDING SHALL BE AT THE SAME ELEVATION ON EACH SIDE OF THE DOOR LANDINGS SHALL HAVE A WIDTH NOT LESS THAN THE WIDTH OF THE DOOR AND LENGTH MEASURED IN THE DIRECTION OF TRAVEL OF NOT LESS THAN 44 INCHES (11120 MM). (1008.1.5, 1008.1.6)

KEYED NOTES

01 THRESHOLDS TO BE BARRIER FREE COMPLIANT PER ALL APPLICABLE CODES.
02 ACCESSIBLE SEATING SPACE.
03 MOBILE TRASH BINS, PASTRY TRAY AND HAMPER.
04 POS TRANSACTION PLANE, CONDIMENT CART TOP AND HAND-OFF PLANE ARE 34 INCHES (860 MM) ABOVE THE FINISHED FLOOR FOR REACH RANGE.
05 HAND SINK, SOAP AND PAPER TOWEL DISPENSER W/ BACKSPLASH AT SIDES, 8IN MIN.
06 30" (762 MM) X 36" (914 MM) CLEAR FLOOR SPACE IN FRONT OF ELECTRICAL PANELS.
07 MOBILE CUP DISPENSER.
08 BARRIER-FREE SIGNAGE AT ACCESSIBLE RESTROOMS.
09 PROVIDE TACTILE "EXIT" SIGNAGE.
10 PLACE FIRE EXTINGUISHER PER LOCAL FIRE CODE REQUIREMENTS. COORDINATE TYPE AND SIZE WITH THE LOCAL INSPECTOR.
11 EXISTING DOOR AND HARDWARE TO REMAIN.
12 NEW BARRIER FREE-STANDING HARDWARE ACTUATOR. REFER TO 1-A602. GC TO COORDINATE WITH LL.
15 30" (762MM) X 48" (1220MM) CLEAR FOR WHEELCHAIR ACCESS.
16 NON-SIMULTANEOUS USE AREAS.

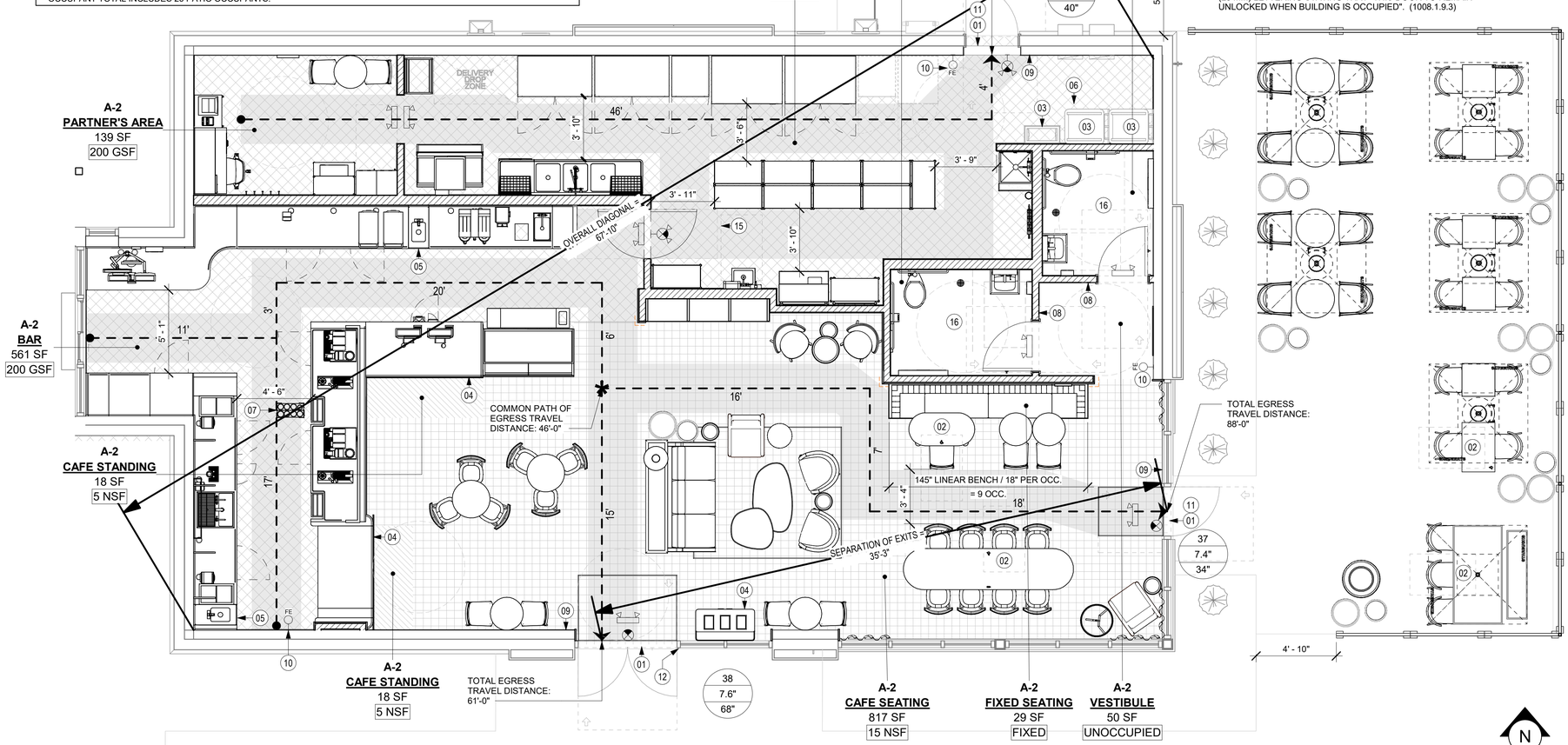

01 LIFE SAFETY PLAN
Scale: 1/4" = 1'-0"

LEGEND

- TRAVEL DISTANCE
- POINT OF CHOICE
- BARRIER FREE PATH OF TRAVEL (MIN 3'-0" - NO PINCH POINT).
- EMERGENCY LIGHT
- EXIT SIGN WITH EMERGENCY LIGHT
- EXIT SIGN

DOOR OCCUPANCY TAG
- 43 — NUMBER OF OCCUPANTS
- 8.6" — CALCULATED EXIT WIDTH REQUIRED (IN.)
- 36" — EXIT WIDTH PROVIDED (IN.)

ROOM TAG
- A-2 — USE GROUP OF SPACE
- WORKROOM — ROOM NAME
- 150 SF — AREA OF SPACE
- 15 NSF — OCCUPANCY MODIFIER PER LIFE SAFETY CODE

- FIRE EXTINGUISHER
- ADA ACCESSIBLE SEATING 36" (915MM) X 48" (1220MM) CLEAR AREA
- ADA ACCESSIBLE CLEAR T-TURNING SPACE
- ADA ACCESSIBLE CLEAR RADIAL TURNING FOR NEW STORE PROJECTS

PERMIT SET - FOR CONSTRUCTION USE

© 2022 STARBUCKS COFFEE COMPANY

STARBUCKS®
2401 UTAH AVENUE SOUTH
SEATTLE, WASHINGTON 98134
(206) 318-1575

THESE DRAWINGS AND THE PROJECT MANUAL ARE CONFIDENTIAL AND SHALL REMAIN THE SOLE PROPERTY OF STARBUCKS CORPORATION, WHICH IS THE OWNER OF THE COPYRIGHT IN THIS WORK. THEY SHALL NOT BE REPRODUCED (IN WHOLE OR IN PART), SHARED WITH THIRD PARTIES OR USED IN ANY MANNER ON OTHER PROJECTS OR EXTENSIONS TO THIS PROJECT WITHOUT THE PRIOR WRITTEN CONSENT OF STARBUCKS CORPORATION. THESE DRAWINGS AND SPECIFICATIONS ARE INTENDED TO EXPRESS DESIGN INTENT FOR A PROTOTYPICAL STARBUCKS STORE (WHICH IS SUBJECT TO CHANGE AT ANYTIME) AND DO NOT REFLECT ACTUAL SITE CONDITIONS. NEITHER PARTY SHALL HAVE ANY OBLIGATION NOR LIABILITY TO THE OTHER (EXCEPT STATED ABOVE) UNTIL A WRITTEN AGREEMENT IS FULLY EXECUTED BY BOTH PARTIES.

STARBUCKS TEMPLATE VERSION: i2023.04.24

PABLO GARCIA, AIA, REG. FL NO. AR99297

Gensler
MAIN OFFICE
M. ARTHUR GENSLER JR. & ASSOCIATES
220 MONTGOMERY STREET, SUITE 200
SAN FRANCISCO, CA 94104 USA
Tel (415) 433.3700
Fax (415) 836.4599

SATELLITE OFFICE
M. ARTHUR GENSLER JR. & ASSOCIATES
FL QUALIFIER'S LIC. NO. AR96486
545 NW 26TH ST
SUITE 250
MIAMI, FL 33127 USA
Tel (305) 350.7070
Fax (305) 350.7071

PROJECT NAME:
ST LUCIE WEST & SW CASHEMERE BLVD

PROJECT ADDRESS:
920 SW SAINT LUCIE BLVD, PORT ST.LUCIE, FL 34986

STORE #:	81616
PROJECT #:	101357-001
ISSUE DATE:	07-08-2025
DESIGN MANAGER:	ASHLEY SUEIRAS
PRODUCTION DESIGNER:	GENSLER
CHECKED BY:	GENSLER

Revision Schedule

Rev	Date	By	Description

SHEET TITLE:
LIFE SAFETY PLAN

SCALE: AS SHOWN

SHEET NUMBER:
G002

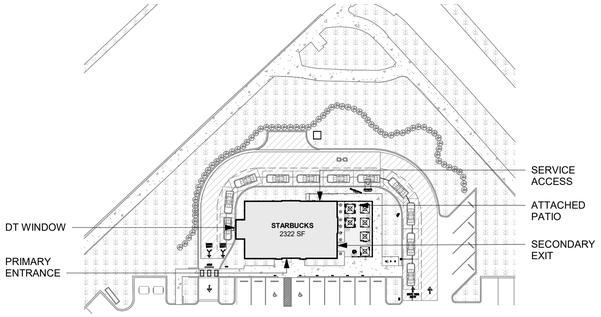

02 KEY PLAN
Scale: 1" = 50'-0"

LEGEND

- ITEM/EQUIPMENT FOR FUTURE
- NEW ITEM/EQUIPMENT
- EXISTING ITEM/EQUIPMENT
- PATH OF TRAVEL

NOTE: LEGEND IS DEPENDENT ON COLORS USED FOR COMPLETE SCOPE INFORMATION.

ADA ACCESSIBLE CLEAR SPACE AT FIXTURES 30" (762MM) X 48" (1220MM) CLEAR AREA

ø 67" 1702MM — ADA ACCESSIBLE CLEAR RADIAL TURNING FOR NEW STORE PROJECTS

KEYED NOTES

02 POS, HAND-OFF PLANE AND CONDIMENT CART COUNTERTOP ARE 2'-10" (MAX.) AFF FOR WHEELCHAIR ACCESSIBILITY.

03 ALL THRESHOLDS TO BE ADA COMPLIANT PER ALL APPLICABLE CODES.

04 ADA TABLE TOPS SHALL BE 28" MINIMUM AND 34" MAXIMUM IN HEIGHT ABOVE THE FLOOR. KNEE CLEARANCE SHALL BE A MINIMUM OF 27" IN HEIGHT ABOVE THE FLOOR AND 30" MINIMUM IN WIDTH.

05 ADA MANEUVERING CLEARANCE AT DOORS; FRONT APPROACH , PUSH SIDE, DOOR PROVIDED WITH CLOSER: 48" MIN PERPENDICULAR, 12" MIN PARALLEL.

06 ADA MANEUVERING CLEARANCE AT DOORS; FRONT APPROACH , PULL SIDE, DOOR PROVIDED WITH CLOSER: 60" MIN PERPENDICULAR, 18" MIN PARALLEL.

08 HAND SINKS AND LAVATORIES TO BE 2'-10" AFF AND 30" X 48" CLEAR FOR WHEELCHAIR ACCESSIBILITY W/ BACKPLASH BY CODE.

DEPT. OF AGRICULTURE AND CONSUMER SERV. FINISH SCHEDULE

BAR
FLOOR: POLYVINYL FLOORING
WALL: POLYWALL BELOW COUNTER, CERAMIC BACKBAR TILE, CORIAN BACKSPLASH, POLYVINYL BASE
CEILING: GYPSUM CEILING

CAFE
FLOOR: CERAMIC TILE
WALL: WOOD CLADDING, WALL COVERING, PAINT W/ TILE BASE
CEILING: GYPSUM CEILING, EXPOSED W/ ACCOUSTICAL BAFFLES

WORKROOM
FLOOR: POLYVINYL FLOORING
WALL: POLYWALL WITH POLYVINYL BASE
CEILING: ACOUSTICAL CEILING TILE

RESTROOM
FLOOR: CERAMIC TILE
WALL: CERAMIC TILE W/ COVED METAL BASE
CEILING: GYPSUM CEILING

DEPT. OF AGRICULTURE AND CONSUMER SERV. FINISH SCHEDULE

A. GENERAL CONTRACTOR TO SCHEDULE WITH REFRIGERATION CONTRACTOR TO CONDUCT INITIAL FOOD CASE START-UP AND TESTING. FOR APPROVED CONTRACTOR, CONTACT THE VENDOR.

B. THE SPACE IS SERVED BY THE MUNICIPAL WATER AND SEWER SYSTEM UNLESS OTHERWISE NOTED.

C. ALL EQUIPMENT AND INSTALLATION WILL MEET NATIONAL SANITATION FOUNDATION STANDARDS OR EQUIVALENT.

D. EQUIPMENT UNITS SHALL CONTAIN NO EXPOSED THREADS, EMBELLISHMENTS OR OVERHANGING EDGES THAT SERVE AS PLACES FOR ACCUMULATION OF DUST, DIRT AND DEBRIS

E. WARMING OVEN(S) SHOWN FOR PERMITTING PURPOSES. INSTALLATION AT STORE OPENING TO BE VERIFIED BY STARBUCKS CONSTRUCTION REPRESENTATIVE.

F. EACH HAND WASHING WILL HAVE A SINGLE SERVICE TOWEL AND SOAP DISPENSER AND ALL HAND SINKS TO HAVE A COMBINATION FAUCET OR PREMIXING FAUCET.

G. REFERENCE INTERIOR SCHEDULE SHEETS (I600 SERIES) FOR ADDITIONAL INFORMATION.

H. PROVIDE SNEEZE GUARDS WHERE REQUIRED BY JURISDICTION.

I. ALL FOOD STORAGE AND DISPLAY SHELVING SHALL BE A MINIMUM 6" (150MM) ABOVE FINISH FLOOR.

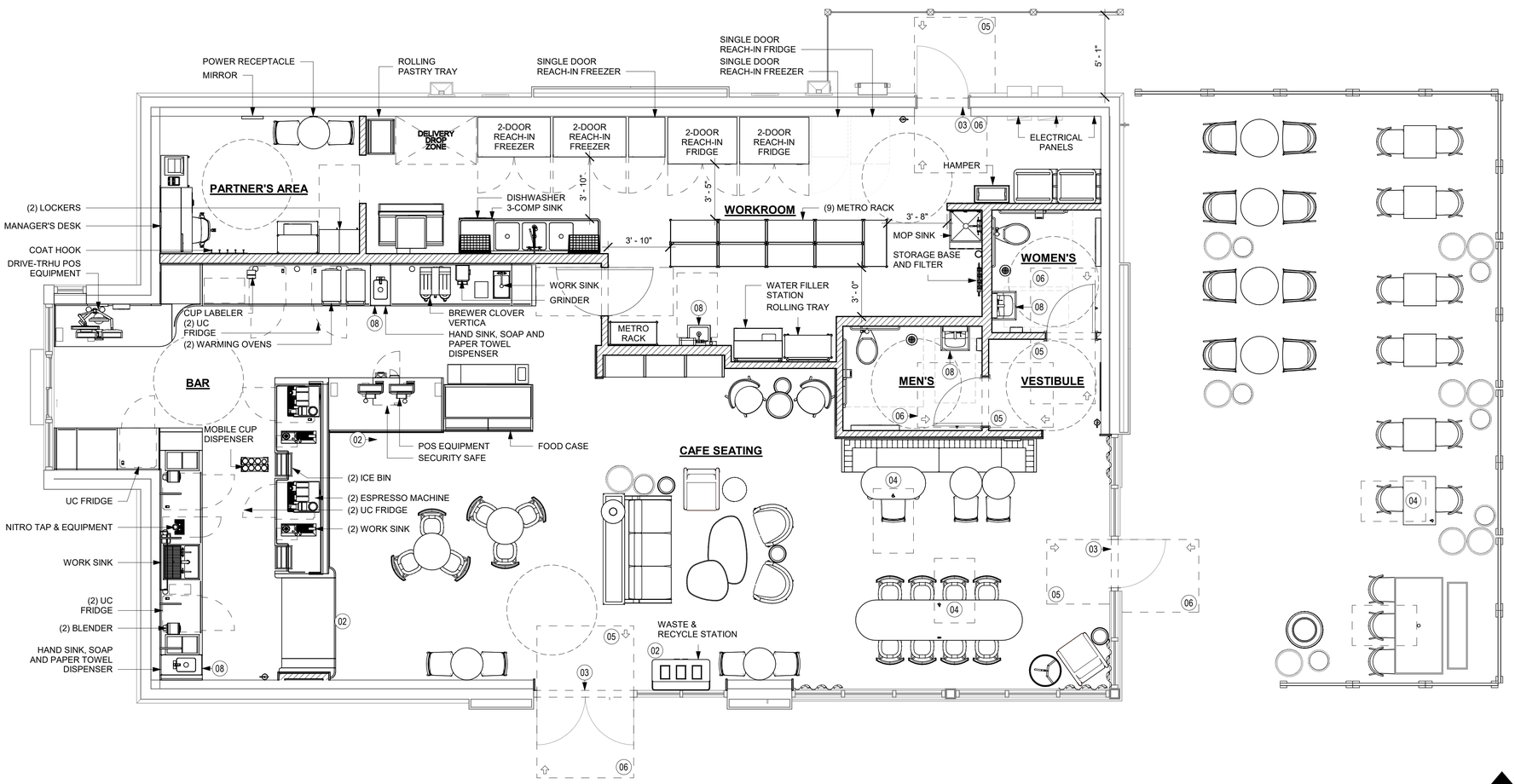

01 FOOD SERVICE AND ACCESSIBILITY PLAN
Scale: 1/4" = 1'-0"

PERMIT SET - FOR CONSTRUCTION USE

© 2022 STARBUCKS COFFEE COMPANY

STARBUCKS®
2401 UTAH AVENUE SOUTH
SEATTLE, WASHINGTON 98134
(206) 318-1575

THESE DRAWINGS AND THE PROJECT MANUAL ARE CONFIDENTIAL AND SHALL REMAIN THE SOLE PROPERTY OF STARBUCKS CORPORATION, WHICH IS THE OWNER OF THE COPYRIGHT IN THIS WORK. THEY SHALL NOT BE REPRODUCED (IN WHOLE OR IN PART), SHARED WITH THIRD PARTIES OR USED IN ANY MANNER ON OTHER PROJECTS OR EXTENSIONS TO THIS PROJECT WITHOUT THE PRIOR WRITTEN CONSENT OF STARBUCKS CORPORATION. THESE DRAWINGS AND SPECIFICATIONS ARE INTENDED TO EXPRESS DESIGN INTENT FOR A PROTOTYPICAL STARBUCKS STORE (WHICH IS SUBJECT TO CHANGE AT ANYTIME) AND DO NOT REFLECT ACTUAL SITE CONDITIONS. NEITHER PARTY SHALL HAVE ANY OBLIGATION NOR LIABILITY TO THE OTHER (EXCEPT STATED ABOVE) UNTIL A WRITTEN AGREEMENT IS FULLY EXECUTED BY BOTH PARTIES.

STARBUCKS TEMPLATE VERSION: i2023.04.24

PABLO GARCIA, AIA, REG. FL NO. AR99297

Gensler
MAIN OFFICE
M. ARTHUR GENSLER JR. & ASSOCIATES
220 MONTGOMERY STREET, SUITE 200
SAN FRANCISCO, CA 94104 USA
Tel (415) 433.3700
Fax (415) 836.4599

SATELLITE OFFICE
M. ARTHUR GENSLER JR. & ASSOCIATES
FL QUALIFIER'S LIC. NO. AR96486
545 NW 26TH ST
SUITE 250
MIAMI, FL 33127 USA
Tel (305) 350.7070
Fax (305) 350.7071

PROJECT NAME:
ST LUCIE WEST & SW CASHEMERE BLVD

PROJECT ADDRESS:
920 SW SAINT LUCIE BLVD, PORT ST.LUCIE, FL 34986

STORE #:	81616
PROJECT #:	101357-001
ISSUE DATE:	07-08-2025
DESIGN MANAGER:	ASHLEY SUEIRAS
PRODUCTION DESIGNER:	GENSLER
CHECKED BY:	GENSLER

Revision Schedule

Rev	Date	By	Description

SHEET TITLE:
FOOD SERVICE PLAN AND ACCESSIBILITY PLAN SHOWN

SHEET NUMBER:
G003

GENERAL NOTES

A. SECTION REFERENCES INDICATED ON THIS SHEET ARE FOR 2023 FLORIDA BUILDING CODE, ACCESSIBILITY, 8TH EDITION.

B. THE RUNNING SLOPE OF WALKING SURFACES SHALL NOT BE STEEPER THAN 1:20. THE CROSS SLOPE OF A WALKING SURFACE SHALL NOT BE STEEPER THAN 1:48 (REF: 403.3).

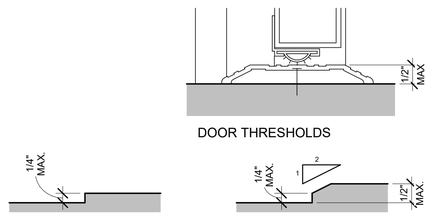

(NOTE: CHANGES IN LEVEL GREATER THAN 1/2" IN HEIGHT SHALL BE RAMPED)

2023 FLORIDA BUILDING CODE, ACCESSIBILITY, 8TH EDITION. ART. 303 CHANGES IN LEVEL.

01 CHANGES IN LEVEL
Scale: 6" = 1'-0"

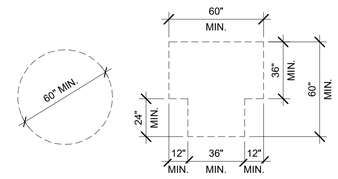

(a) CIRCULAR (b) T-SHAPED

2023 FLORIDA BUILDING CODE, ACCESSIBILITY, 8TH EDITION. ART. 304.3.

02 TURNING SPACE
Scale: 1/4" = 1'-0"

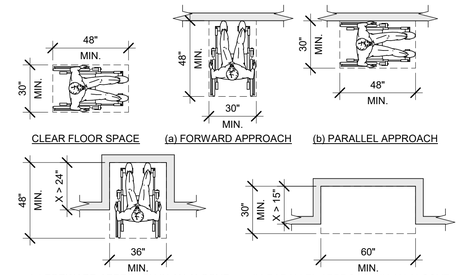

2023 FLORIDA BUILDING CODE, ACCESSIBILITY, 8TH EDITION. ART. 305.3.

03 CLEAR FLOOR SPACE
Scale: 1/4" = 1'-0"

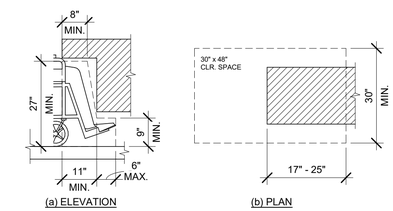

2023 FLORIDA BUILDING CODE, ACCESSIBILITY, 8TH EDITION. FIG. 306.2. TOE CLEARANCE AND FIG. 306.3 KNEE CLEARANCE.

04 KNEE AND TOE CLEARANCE
Scale: 1/2" = 1'-0"

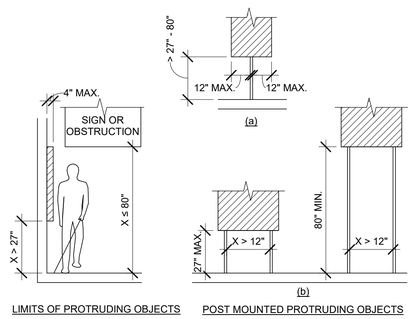

2023 FLORIDA BUILDING CODE, ACCESSIBILITY, 8TH EDITION. ART. 307 PROTRUDING OBJECTS.

05 PROTRUDING OBJECTS
Scale: 1/4" = 1'-0"

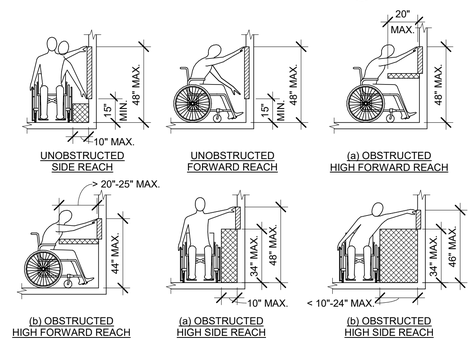

2023 FLORIDA BUILDING CODE, ACCESSIBILITY, 8TH EDITION. ART. 308 REACH RANGES.

06 REACH RANGES
Scale: 1/4" = 1'-0"

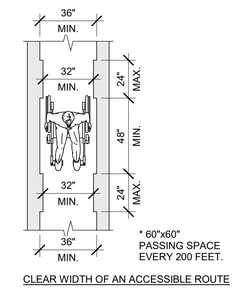

2023 FLORIDA BUILDING CODE, ACCESSIBILITY, 8TH EDITION. FIG. 403.5.1 CLEAR WIDTH OF AN ACCESSIBLE ROUTE.

07 CLEAR WIDTH
Scale: 1/4" = 1'-0"

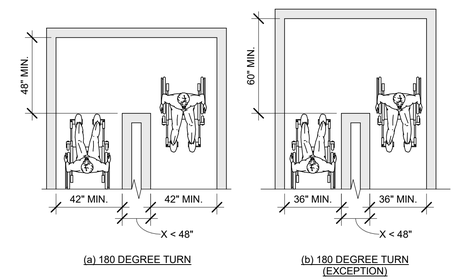

2023 FLORIDA BUILDING CODE, ACCESSIBILITY, 8TH EDITION. FIG. 403.5.2 CLEAR WIDTH AT TURN.

08 CLEAR WIDTH AT 180 DEGREE TURN
Scale: 1/4" = 1'-0"

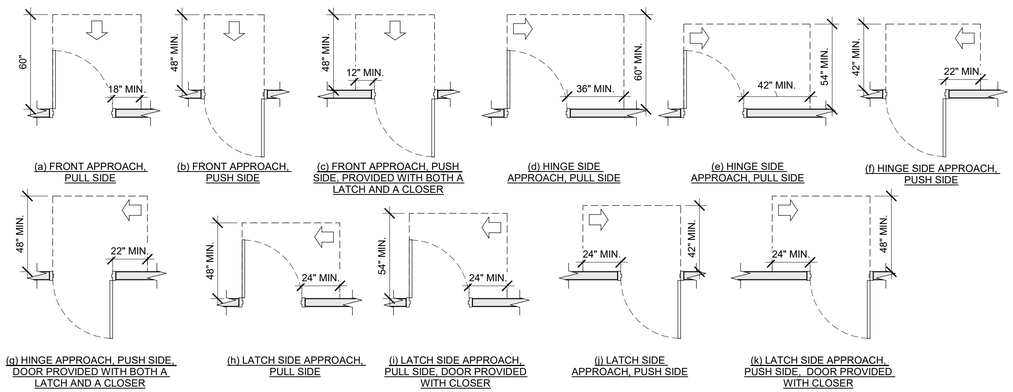

2023 FLORIDA BUILDING CODE, ACCESSIBILITY, 8TH EDITION. FIG. 404.2.4 MANEUVERING CLEARANCES.

09 MANEUVERING CLEARANCES AT SWINGING DOORS
Scale: 1/4" = 1'-0"

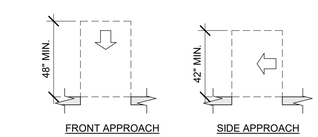

2023 FLORIDA BUILDING CODE, ACCESSIBILITY, 8TH EDITION. FIG. 404.2.4.2.

10 MANEUVERING CLEARANCES AT DOORWAYS WITHOUT DOORS
Scale: 1/4" = 1'-0"

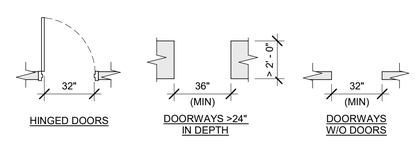

2023 FLORIDA BUILDING CODE, ACCESSIBILITY, 8TH EDITION. 404.2.3.

11 CLEAR WIDTH AT DOORS & DOORWAYS
Scale: 1/4" = 1'-0"

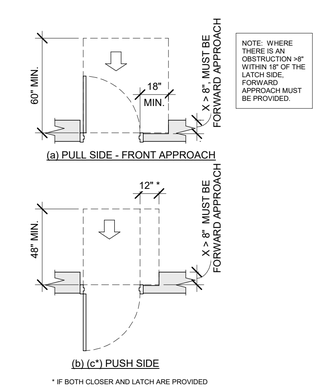

2023 FLORIDA BUILDING CODE, ACCESSIBILITY, 8TH EDITION. FIG. 404.2.4.3 MANEUVERING CLEARANCES AT RECESSED DOORS AND GATES.

12 RECESSED DOORS
Scale: 1/4" = 1'-0"

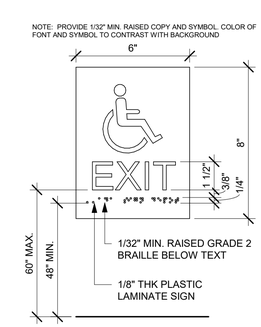

13 ACCESSIBLE EXIT SIGN / SYMBOL
Scale: 3" = 1'-0"

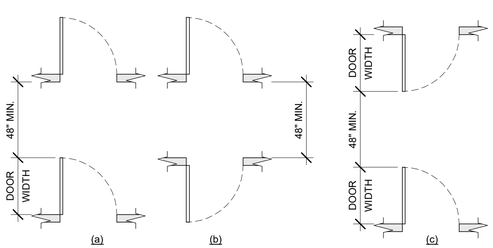

2023 FLORIDA BUILDING CODE, ACCESSIBILITY, 8TH EDITION. FIG. 404.2.6 DOORS IN SERIES AND GATES IN SERIES.

14 DOORS IN SERIES
Scale: 1/4" = 1'-0"

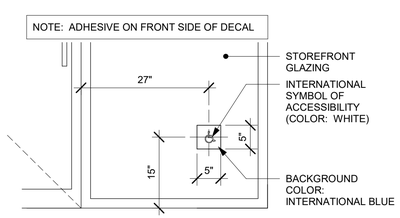

2023 FLORIDA BUILDING CODE, ACCESSIBILITY, 8TH EDITION. FIG. 703.7.2.1 INTERNATIONAL SYMBOL OF ACCESSIBILITY.

15 ACCESSIBLE STOREFRONT ENTRANCE GRAPHIC
Scale: 3/4" = 1'-0"

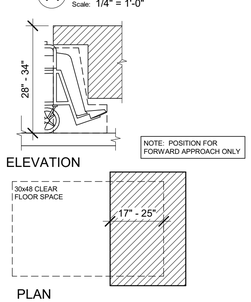

2023 FLORIDA BUILDING CODE, ACCESSIBILITY, 8TH EDITION. ART. 902 DINING SURFACES AND WORK SURFACES.

16 DINING AND WORK SURFACES
Scale: 1/2" = 1'-0"

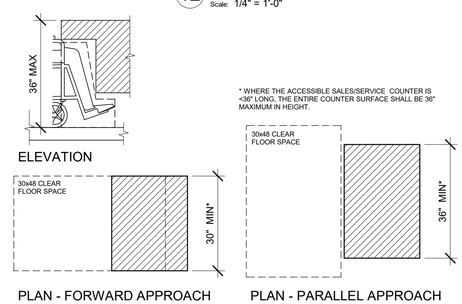

2023 FLORIDA BUILDING CODE, ACCESSIBILITY, 8TH EDITION. ART. 904 CHECK-OUT AISLES AND SALES AND SERVICE COUNTERS.

17 SALES AND SERVICE COUNTERS
Scale: 1/2" = 1'-0"

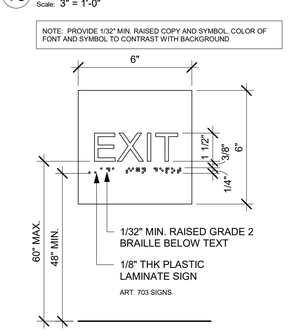

18 EXIT SIGN - STANDARD
Scale: 3" = 1'-0"

PERMIT SET - FOR CONSTRUCTION USE

© 2022 STARBUCKS COFFEE COMPANY

STARBUCKS®
2401 UTAH AVENUE SOUTH
SEATTLE, WASHINGTON 98134
(206) 318-1575

THESE DRAWINGS AND THE PROJECT MANUAL ARE CONFIDENTIAL AND SHALL REMAIN THE SOLE PROPERTY OF STARBUCKS CORPORATION, WHICH IS THE OWNER OF THE COPYRIGHT IN THIS WORK. THEY SHALL NOT BE REPRODUCED (IN WHOLE OR IN PART), SHARED WITH THIRD PARTIES OR USED IN ANY MANNER ON OTHER PROJECTS OR EXTENSIONS TO THIS PROJECT WITHOUT THE PRIOR WRITTEN CONSENT OF STARBUCKS CORPORATION. THESE DRAWINGS AND SPECIFICATIONS ARE INTENDED TO EXPRESS DESIGN INTENT FOR A PROTOTYPICAL STARBUCKS STORE (WHICH IS SUBJECT TO CHANGE AT ANYTIME) AND DO NOT REFLECT ACTUAL SITE CONDITIONS. NEITHER PARTY SHALL HAVE ANY OBLIGATION NOR LIABILITY TO THE OTHER (EXCEPT STATED ABOVE) UNTIL A WRITTEN AGREEMENT IS FULLY EXECUTED BY BOTH PARTIES.

STARBUCKS TEMPLATE VERSION: i2023.04.24

PABLO GARCIA, AIA, REG. FL NO. AR99297

Gensler

MAIN OFFICE
M. ARTHUR GENSLER JR. & ASSOCIATES
220 MONTGOMERY STREET, SUITE 200
SAN FRANCISCO, CA 94104 USA
Tel (415) 433.3700
Fax (415) 836.4599

SATELLITE OFFICE
M. ARTHUR GENSLER JR. & ASSOCIATES
FL QUALIFIER'S LIC. NO. AR96486
545 NW 26TH ST
SUITE 250
MIAMI, FL 33127 USA
Tel (305) 350.7070
Fax (305) 350.7071

PROJECT NAME:
ST LUCIE WEST & SW CASHEMERE BLVD

PROJECT ADDRESS:
920 SW SAINT LUCIE BLVD, PORT ST.LUCIE, FL 34986

STORE #:	81616
PROJECT #:	101357-001
ISSUE DATE:	07-08-2025
DESIGN MANAGER:	ASHLEY SUEIRAS
PRODUCTION DESIGNER:	GENSLER
CHECKED BY:	GENSLER

Revision Schedule

Rev	Date	By	Description

SHEET TITLE:
ACCESSIBILITY GUIDELINES
SCALE: AS SHOWN

SHEET NUMBER:
G004

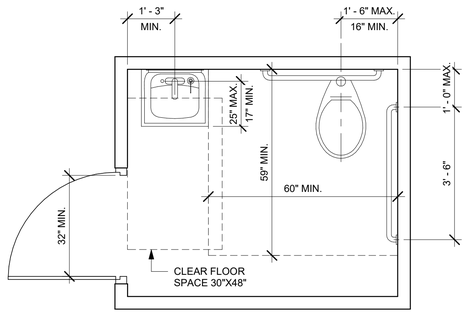

PLAN VIEW

2023 FLORIDA BUILDING CODE, ACCESSIBILITY, 8TH EDITION.
604 WATER CLOSETS AND TOILET COMPARTMENTS

01 ACCESSIBLE UNISEX TOILET ROOM

Scale: 1/2" = 1'-0"

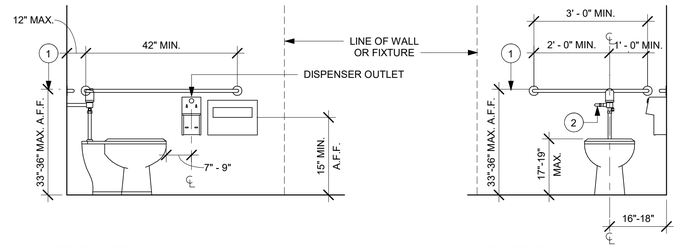

SIDE ELEVATION **FRONT ELEVATION**

NOTE:
1. GRAB BARS SHALL BE INSTALLED IN A HORIZONTAL POSITION, 33 INCHES (840 MM) MINIMUM AND 36 INCHES (915 MM) MAXIMUM ABOVE THE FINISH FLOOR MEASURED TO THE TOP OF THE GRIPPING SURFACE. (FBCA 609.4)
2. FLUSH CONTROLS SHALL BE HAND OPERATED OR AUTOMATIC. HAND OPERATED FLUSH CONTROLS SHALL COMPLY WITH 309. FLUSH CONTROLS SHALL BE LOCATED ON THE OPEN SIDE OF THE WATER CLOSET EXCEPT IN AMBULATORY ACCESSIBLE COMPARTMENTS COMPLYING WITH 604.8.2. (FBCA 604.6)

02 ACCESSIBLE TOILET STALL ELEVATIONS

Scale: 1/2" = 1'-0"

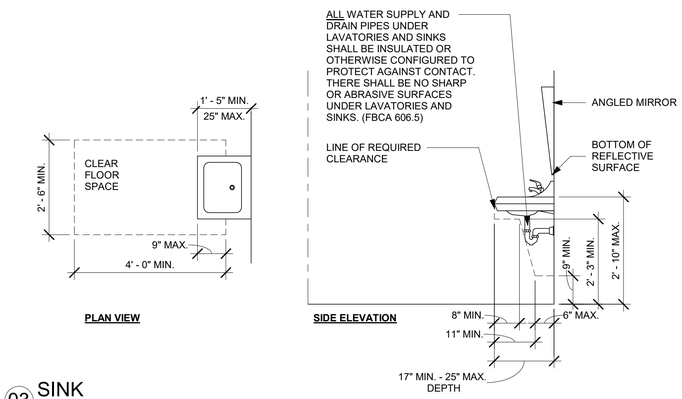

PLAN VIEW **SIDE ELEVATION**

03 SINK

Scale: 1/2" = 1'-0"

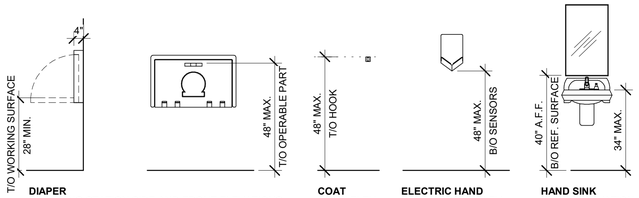

DIAPER CHANGING STATION SIDE AND FRONT ELEVATIONS
COAT HOOK ELEV.
ELECTRIC HAND DRYER FRONT ELEV.
HAND SINK FRONT ELEVATION

04 MOUNTING HEIGHTS FOR RESTROOM ACCESSORIES

Scale: 3/8" = 1'-0"

PERMIT SET - FOR CONSTRUCTION USE

© 2022 STARBUCKS COFFEE COMPANY

STARBUCKS®
2401 UTAH AVENUE SOUTH
SEATTLE, WASHINGTON 98134
(206) 318-1575

THESE DRAWINGS AND THE PROJECT MANUAL ARE CONFIDENTIAL AND SHALL REMAIN THE SOLE PROPERTY OF STARBUCKS CORPORATION, WHICH IS THE OWNER OF THE COPYRIGHT IN THIS WORK. THEY SHALL NOT BE REPRODUCED (IN WHOLE OR IN PART), SHARED WITH THIRD PARTIES OR USED IN ANY MANNER ON OTHER PROJECTS OR EXTENSIONS TO THIS PROJECT WITHOUT THE PRIOR WRITTEN CONSENT OF STARBUCKS CORPORATION. THESE DRAWINGS AND SPECIFICATIONS ARE INTENDED TO EXPRESS DESIGN INTENT FOR A PROTOTYPICAL STARBUCKS STORE (WHICH IS SUBJECT TO CHANGE AT ANYTIME) AND DO NOT REFLECT ACTUAL SITE CONDITIONS. NEITHER PARTY SHALL HAVE ANY OBLIGATION NOR LIABILITY TO THE OTHER (EXCEPT STATED ABOVE) UNTIL A WRITTEN AGREEMENT IS FULLY EXECUTED BY BOTH PARTIES.

STARBUCKS TEMPLATE VERSION: i2023.04.24

PABLO GARCIA, AIA, REG. FL NO. AR99297

Gensler

MAIN OFFICE
M. ARTHUR GENSLER JR. & ASSOCIATES
220 MONTGOMERY STREET, SUITE 200
SAN FRANCISCO, CA 94104 USA
Tel (415) 433.3700
Fax (415) 836.4599

SATELLITE OFFICE
M. ARTHUR GENSLER JR. & ASSOCIATES
FL QUALIFIER'S LIC. NO: AR96486
545 NW 26TH ST
SUITE 250
MIAMI, FL 33127 USA
Tel (305) 350.7070
Fax (305) 350.7071

PROJECT NAME:
ST LUCIE WEST & SW
CASHEMERE BLVD

PROJECT ADDRESS:
920 SW SAINT LUCIE BLVD, PORT
ST.LUCIE, FL 34986

STORE #:	81616
PROJECT #:	101357-001
ISSUE DATE:	07-08-2025
DESIGN MANAGER:	ASHLEY SUEIRAS
PRODUCTION DESIGNER:	GENSLER
CHECKED BY:	GENSLER

Revision Schedule

Rev	Date	By	Description

SHEET TITLE:
ACCESSIBILITY
GUIDELINES
SCALE: AS SHOWN

SHEET NUMBER:
G004.1

VIEW AT ENGINE

Scale:

VIEW AT MERCH

Scale:

VIEW AT BANQUETTE

Scale:

VIEW AT SOFT SEATING

Scale:

PERMIT SET - FOR CONSTRUCTION USE

© 2022 STARBUCKS COFFEE COMPANY

STARBUCKS®
2401 UTAH AVENUE SOUTH
SEATTLE, WASHINGTON 98134
(206) 318-1575

THESE DRAWINGS AND THE PROJECT MANUAL ARE CONFIDENTIAL AND SHALL REMAIN THE SOLE PROPERTY OF STARBUCKS CORPORATION, WHICH IS THE OWNER OF THE COPYRIGHT IN THIS WORK. THEY SHALL NOT BE REPRODUCED (IN WHOLE OR IN PART), SHARED WITH THIRD PARTIES OR USED IN ANY MANNER ON OTHER PROJECTS OR EXTENSIONS TO THIS PROJECT WITHOUT THE PRIOR WRITTEN CONSENT OF STARBUCKS CORPORATION. THESE DRAWINGS AND SPECIFICATIONS ARE INTENDED TO EXPRESS DESIGN INTENT FOR A PROTOTYPICAL STARBUCKS STORE (WHICH IS SUBJECT TO CHANGE AT ANYTIME) AND DO NOT REFLECT ACTUAL SITE CONDITIONS. NEITHER PARTY SHALL HAVE ANY OBLIGATION NOR LIABILITY TO THE OTHER (EXCEPT STATED ABOVE) UNTIL A WRITTEN AGREEMENT IS FULLY EXECUTED BY BOTH PARTIES.

STARBUCKS TEMPLATE VERSION: i2023.04.24

PABLO GARCIA, AIA, REG. FL NO. AR99297

Gensler

MAIN OFFICE
M. ARTHUR GENSLER JR. & ASSOCIATES
220 MONTGOMERY STREET, SUITE 200
SAN FRANCISCO, CA 94104 USA
Tel (415) 433.3700
Fax (415) 836.4599

SATELLITE OFFICE
M. ARTHUR GENSLER JR. & ASSOCIATES
FL QUALIFIER'S LIC. NO. AR96486
545 NW 26TH ST
SUITE 250
MIAMI, FL 33127 USA
Tel (305) 350.7070
Fax (305) 350.7071

PROJECT NAME:
ST LUCIE WEST & SW CASHEMERE BLVD

PROJECT ADDRESS:
920 SW SAINT LUCIE BLVD, PORT ST.LUCIE, FL 34986

STORE #:	81616
PROJECT #:	101357-001
ISSUE DATE:	07-08-2025
DESIGN MANAGER:	ASHLEY SUEIRAS
PRODUCTION DESIGNER:	GENSLER
CHECKED BY:	GENSLER

Revision Schedule

Rev	Date	By	Description

SHEET TITLE:
PERSPECTIVE VIEWS

SCALE: AS SHOWN

SHEET NUMBER:
G005

PERMIT SET - FOR CONSTRUCTION USE

© 2022 STARBUCKS COFFEE COMPANY

STARBUCKS®
2401 UTAH AVENUE SOUTH
SEATTLE, WASHINGTON 98134
(206) 318-1575

THESE DRAWINGS AND THE PROJECT MANUAL ARE CONFIDENTIAL AND SHALL REMAIN THE SOLE PROPERTY OF STARBUCKS CORPORATION, WHICH IS THE OWNER OF THE COPYRIGHT IN THIS WORK. THEY SHALL NOT BE REPRODUCED (IN WHOLE OR IN PART), SHARED WITH THIRD PARTIES OR USED IN ANY MANNER ON OTHER PROJECTS OR EXTENSIONS TO THIS PROJECT WITHOUT THE PRIOR WRITTEN CONSENT OF STARBUCKS CORPORATION. THESE DRAWINGS AND SPECIFICATIONS ARE INTENDED TO EXPRESS DESIGN INTENT FOR A PROTOTYPICAL STARBUCKS STORE (WHICH IS SUBJECT TO CHANGE AT ANYTIME) AND DO NOT REFLECT ACTUAL SITE CONDITIONS. NEITHER PARTY SHALL HAVE ANY OBLIGATION NOR LIABILITY TO THE OTHER (EXCEPT STATED ABOVE) UNTIL A WRITTEN AGREEMENT IS FULLY EXECUTED BY BOTH PARTIES.

STARBUCKS TEMPLATE VERSION: i2023.04.24

PABLO GARCIA, AIA, REG. FL NO. AR99297

Gensler

MAIN OFFICE
M. ARTHUR GENSLER JR. & ASSOCIATES
220 MONTGOMERY STREET, SUITE 200
SAN FRANCISCO, CA 94104 USA
Tel (415) 433.3700
Fax (415) 836.4599

SATELLITE OFFICE
M. ARTHUR GENSLER JR. & ASSOCIATES
FL QUALIFIER'S LIC. NO. AR96486
545 NW 26TH ST
SUITE 250
MIAMI, FL 33127 USA
Tel (305) 350.7070
Fax (305) 350.7071

PROJECT NAME:
ST LUCIE WEST & SW
CASHEMERE BLVD

PROJECT ADDRESS:
920 SW SAINT LUCIE BLVD, PORT
ST.LUCIE, FL 34986

STORE #:	81616
PROJECT #:	101357-001
ISSUE DATE:	07-08-2025
DESIGN MANAGER:	ASHLEY SUEIRAS
PRODUCTION DESIGNER:	GENSLER
CHECKED BY:	GENSLER

Revision Schedule

Rev	Date	By	Description

SHEET TITLE:
RENDERS

SCALE: AS SHOWN

SHEET NUMBER:
G005.1

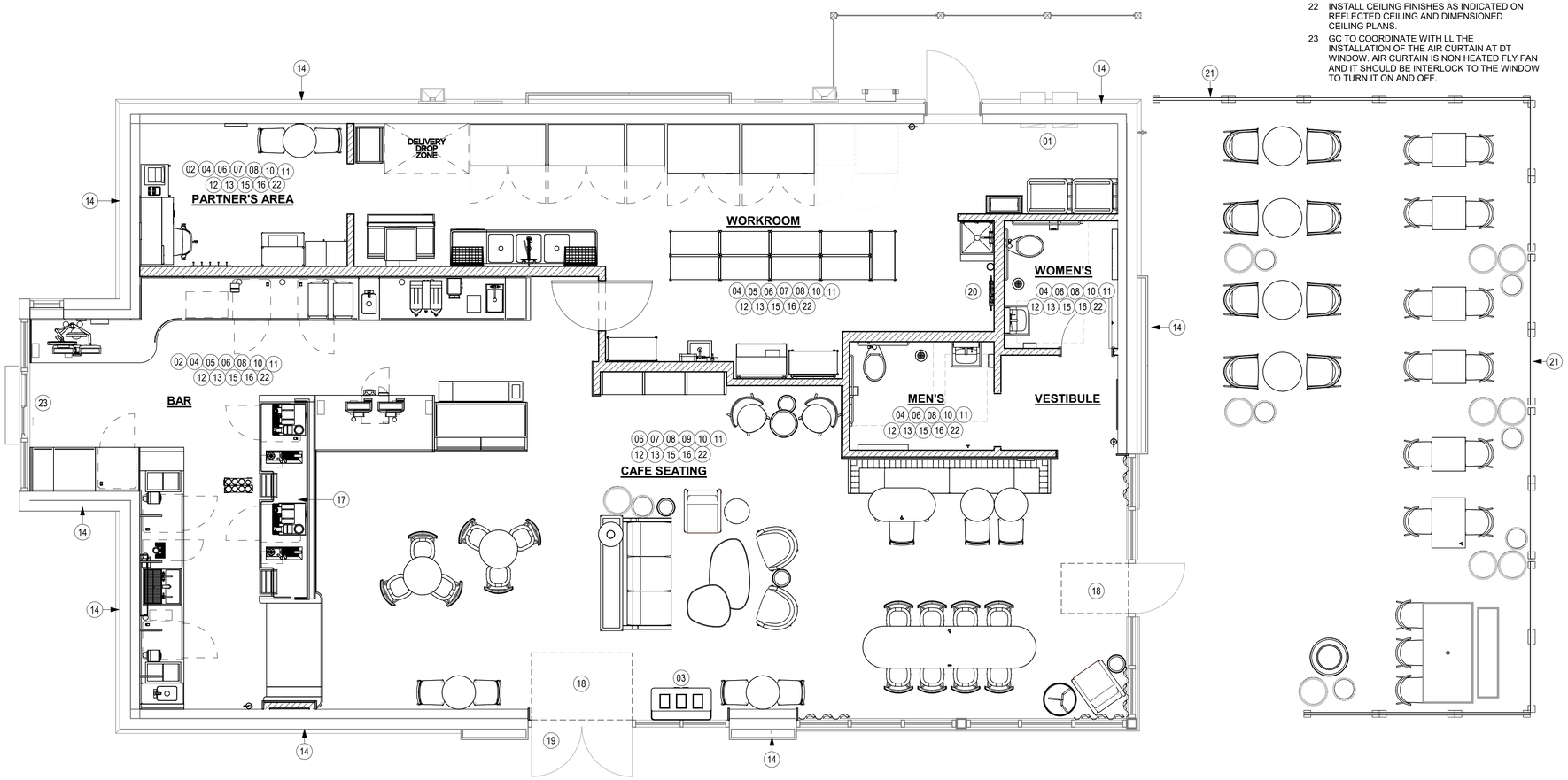

01 SCOPE OF WORK PLAN
Scale: 1/4" = 1'-0"

KEYED NOTES

01 EXISTING RECESSED ELECTRICAL PANEL AS INDICATED ON ELECTRICAL DRAWINGS.
02 INSTALL CASEWORK ITEMS AS INDICATED ON CASEWORK PLAN.
03 INSTALL WASTE AND RECYCLE STATION AS INDICATED ON CASEWORK PLAN.
04 INSTALL PLUMBING ITEMS AS INDICATED ON FF&E PLAN.
05 INSTALL EQUIPMENT AS INDICATED ON FF& E PLAN.
06 INTERIOR CONCRETE SLAB BY GC.
07 INSTALL FURNITURE AS INDICATED ON FF&E PLAN.
08 PATCH, PRIME AND PAINT WALL, CEILING AND/ OR SOFFITAS INDICATED ON REFLECTED CEILING PLAN AND INTERIOR ELEVATIONS.
09 INSTALL GRAPHICS AS INDICATED ON INTERIOR ELEVATIONS.
10 INSTALL WALL FINISHES THROUGHOUT AS INDICATED ONINTERIOR ELEVATIONS AND WALL FINISH PLAN.
11 INSTALL FLOOR FINISHES AS INDICATED ON FLOOR FINISH PLAN.
12 INSTALL LIGHT FIXTURES AS INDICATED ON REFLECTED CEILING AND DIMENSIONED LIGHTING PLANS.
13 PRIME AND PAINT WALLS AS INDICATED ON WALL FINISH PLAN AND INTERIOR ELEVATIONS.
14 EXISTING BUILDING SHELL.
15 INSTALL ELECTRICAL OUTLETS AS INDICATED ON PENETRATION PLAN AND ELECTRICAL DRAWINGS.
16 CONSTRUCT INTERIOR PARTITION WALLS AS INDICATED ON FLOOR PLAN.
17 INSTALL ESPRESSO BAR AS INDICATED ON CASEWORK PLAN.
18 INSTALL WALK-OFF MAT AS INDICATED ON FLOOR FINISH PLAN.
19 INSTALL NEW ACUTOMATIC DOOR ACTUATOR, MULLION ACTUATOR PUSH PLATE, AND KEY SWITCH AS SPECIFIED IN THE FLOOR PLAN.
20 INSTALL NEW HOT WATER RECIRCULATION PUMP AND BOOSTER PUMP.
21 EXISTING PATIO RAILING.
22 INSTALL CEILING FINISHES AS INDICATED ON REFLECTED CEILING AND DIMENSIONED CEILING PLANS.
23 GC TO COORDINATE WITH LL THE INSTALLATION OF THE AIR CURTAIN AT DT WINDOW. AIR CURTAIN IS NON HEATED FLY FAN AND IT SHOULD BE INTERLOCK TO THE WINDOW TO TURN IT ON AND OFF.

GENERAL NOTES

A. THE DRAWINGS AND PROJECT MANUAL TOGETHER CONSTITUTE THE CONTRACT DOCUMENTS FOR CONSTRUCTION. ALL GENERAL REQUIREMENTS ARE TO BE MET AND ALL MATERIALS, FINISHES AND SYSTEMS ARE TO BE INSTALLED AND PERFORM PER SPECIFICATIONS UNLESS OTHERWISE NOTED.

B. GENERAL CONTRACTOR SHALL VISIT THE SITE, REVIEW THE BUILDING SHELL DRAWINGS AS SUBMITTED BY THE LANDLORD OR STARBUCKS AND BECOME THOROUGHLY FAMILIAR WITH THE SITE CONDITIONS PRIOR TO CONSTRUCTION.

C. GENERAL CONTRACTOR SHALL CONSULT WITH STARBUCKS CONSTRUCTION MANAGER TO RESOLVE ANY CHANGES, OMISSIONS OR PLAN DISCREPANCIES PRIOR TO CONSTRUCTION.

D. ALL WORK SHALL BE PERFORMED IN STRICT COMPLIANCE WITH LOCAL, COUNTY, STATE AND FEDERAL CODES AND ORDINANCES.

E. GENERAL CONTRACTOR SHALL VERIFY THE LOCATION OF ALL UTILITIES.

F. GENERAL CONTRACTOR TO VERIFY ALL DIMENSIONS, INCLUDING CLEARANCES REQUIRED BY OTHER TRADES AND NOTIFY STARBUCKS CONSTRUCTION MANAGER OF ANY DISCREPANCIES PRIOR TO PROCEEDING WITH THE WORK. ALL DIMENSIONS ARE TO THE FACE OF THE FINISHED SURFACE UNLESS OTHERWISE NOTED. ALL DIMENSIONS TO BE TAKEN FROM DESIGNATED DATUM POINT. DO NOT SCALE DRAWINGS.

G. GENERAL CONTRACTOR SHALL PATCH AND REPAIR ALL EXISTING WALLS, FLOORS, CEILINGS OR OTHER SURFACES IDENTIFIED TO REMAIN THAT MAY BECOME DAMAGED DURING THE COURSE OF THE WORK.

H. THE GENERAL CONTRACTOR IS RESPONSIBLE FOR OBTAINING PERMITS FOR FIRE PROTECTION, PLUMBING, MECHANICAL AND ELECTRICAL SYSTEMS PRIOR TO INSTALLATION OF SUCH SYSTEMS.

I. GENERAL CONTRACTOR SHALL RETAIN ONE SET OF PERMIT PLANS ON-SITE TO DOCUMENT ALL CHANGES MADE DURING CONSTRUCTION. THE RECORD DRAWINGS SHALL BE ISSUED TO THE OWNER AT PROJECT CLOSE-OUT AS DESCRIBED IN THE GENERAL REQUIREMENTS OF THE PROJECT MANUAL.

J. GENERAL CONTRACTOR IS RESPONSIBLE FOR COORDINATING DELIVERY OF MATERIALS FROM STARBUCKS CONTRACTED THIRD PARTY LOGISTICS DISTRIBUTION SERVICES AND VENDOR DIRECT SHIPMENTS. SEE THE PROJECT MANUAL FOR ADDITIONAL INFORMATION.

K. RESPONSIBILITY FOR SUPPLY AND DELIVERY OF MATERIALS AND EQUIPMENT IS IDENTIFIED IN THE DRAWING SCHEDULE SHEETS UNDER THE COLUMN LABELED "RESPONSIBILITY".

L. FOR THE PURPOSE OF THE DOCUMENTS, TO "INSTALL", SHALL MEAN TO PROVIDE ALL FASTENERS, MISCELLANEOUS HARDWARE, BLOCKING, ELECTRICAL CONNECTIONS, PLUMBING CONNECTIONS AND OTHER ITEMS REQUIRED FOR A COMPLETE AND OPERATIONAL INSTALLATION, UNLESS OTHERWISE NOTED.

M. ALL ITEM SUBSTITUTIONS MUST BE APPROVED BY THE STARBUCKS CONSTRUCTION MANAGER.

N. CONTRACTOR MUST FOLLOW REQUIREMENTS OF FBC CHAPTER 1, SECTION 195.8 NOTICE OF COMMENCEMENT.

O. THE FOLLOWING SHALL BE SUBMITTED FOR REVIEW BY THE GENERAL CONTRACTOR TO THE BUILDING OFFICIALS WITH CONTRACT DOCUMENTS. DEFERRED SUBMITTALS / SEPARED PERMIT PER FBC CHAPTER 1 SECTION 107.3.4., NOT LIMITED TO:

a. FIRE ALARM
b. FIRE SPRINKLERS
c. LOW VOLTAGE
d. METAL FABRICATIONS
e. MISCELLANEOUS METALS
f. COLD FORM FRAMING DESIGN

P. CONTRACTOR SEPARATED PERMIT FOR FIRE SPRINKLER SYSTEM MUST FOLLOW THE FLORIDA STATE ADMINISTRATIVE CODE SECTION 61G15-32.004 "DESIGN OF WATER BASED FIRE PROTECTION SYSTEMS", SUBSECTIONS (1) – (6).

Q. CONTRACTOR MUST FOLLOW REQUIREMEND OF FBC CHAPTER 1 SETION 105.9 TREATMENT OF TERMITES AND SECTION 110.3.11.

R. ARCHITECT IS TO PROVIDE A LETTER OF ACCEPTANCE TO THE BUILDING DEPARTMENT OFFICIAL AS PART OD CLOSEOUT PERMIT PROCCESS FBC CHAPTER 1 SECTION 110.8.4.4.

S. CONTRACTOR TO PROVIDE ACCESS PANELS TO ALL MECHANICAL VALVES AND ANY OTHER EQUIPMENT THAT REQUIRES ACCESS OBSERVED PRIOR AND DURIING CONSTRUCTION.

T. ALL DEVICES, OUTLET TRIM AND COVER PLATES TO BE BLACK AT FOH AND WHITE AT BOH.

PERMIT SET - FOR CONSTRUCTION USE

© 2022 STARBUCKS COFFEE COMPANY

STARBUCKS®
2401 UTAH AVENUE SOUTH
SEATTLE, WASHINGTON 98134
(206) 318-1575

THESE DRAWINGS AND THE PROJECT MANUAL ARE CONFIDENTIAL AND SHALL REMAIN THE SOLE PROPERTY OF STARBUCKS CORPORATION, WHICH IS THE OWNER OF THE COPYRIGHT IN THIS WORK. THEY SHALL NOT BE REPRODUCED (IN WHOLE OR IN PART), SHARED WITH THIRD PARTIES OR USED IN ANY MANNER ON OTHER PROJECTS OR EXTENSIONS TO THIS PROJECT WITHOUT THE PRIOR WRITTEN CONSENT OF STARBUCKS CORPORATION. THESE DRAWINGS AND SPECIFICATIONS ARE INTENDED TO EXPRESS DESIGN INTENT FOR A PROTOTYPICAL STARBUCKS STORE (WHICH IS SUBJECT TO CHANGE AT ANYTIME) AND DO NOT REFLECT ACTUAL SITE CONDITIONS. NEITHER PARTY SHALL HAVE ANY OBLIGATION NOR LIABILITY TO THE OTHER (EXCEPT STATED ABOVE) UNTIL A WRITTEN AGREEMENT IS FULLY EXECUTED BY BOTH PARTIES.

STARBUCKS TEMPLATE VERSION: i2023.04.24

PABLO GARCIA, AIA, REG. FL NO. AR99297

Gensler
MAIN OFFICE
M. ARTHUR GENSLER JR. & ASSOCIATES
220 MONTGOMERY STREET, SUITE 200
SAN FRANCISCO, CA 94104 USA
Tel (415) 433.3700
Fax (415) 836.4599

SATELLITE OFFICE
M. ARTHUR GENSLER JR. & ASSOCIATES
FL QUALIFIER'S LIC. NO. AR96486
545 NW 26TH ST
SUITE 250
MIAMI, FL 33127 USA
Tel (305) 350.7070
Fax (305) 350.7071

PROJECT NAME:
ST LUCIE WEST & SW CASHEMERE BLVD

PROJECT ADDRESS:
920 SW SAINT LUCIE BLVD, PORT ST.LUCIE, FL 34986

STORE #:	81616
PROJECT #:	101357-001
ISSUE DATE:	07-08-2025
DESIGN MANAGER:	ASHLEY SUEIRAS
PRODUCTION DESIGNER:	GENSLER
CHECKED BY:	GENSLER

Revision Schedule

Rev	Date	By	Description

SHEET TITLE:
SCOPE OF WORK

SCALE: AS SHOWN

SHEET NUMBER:
G006

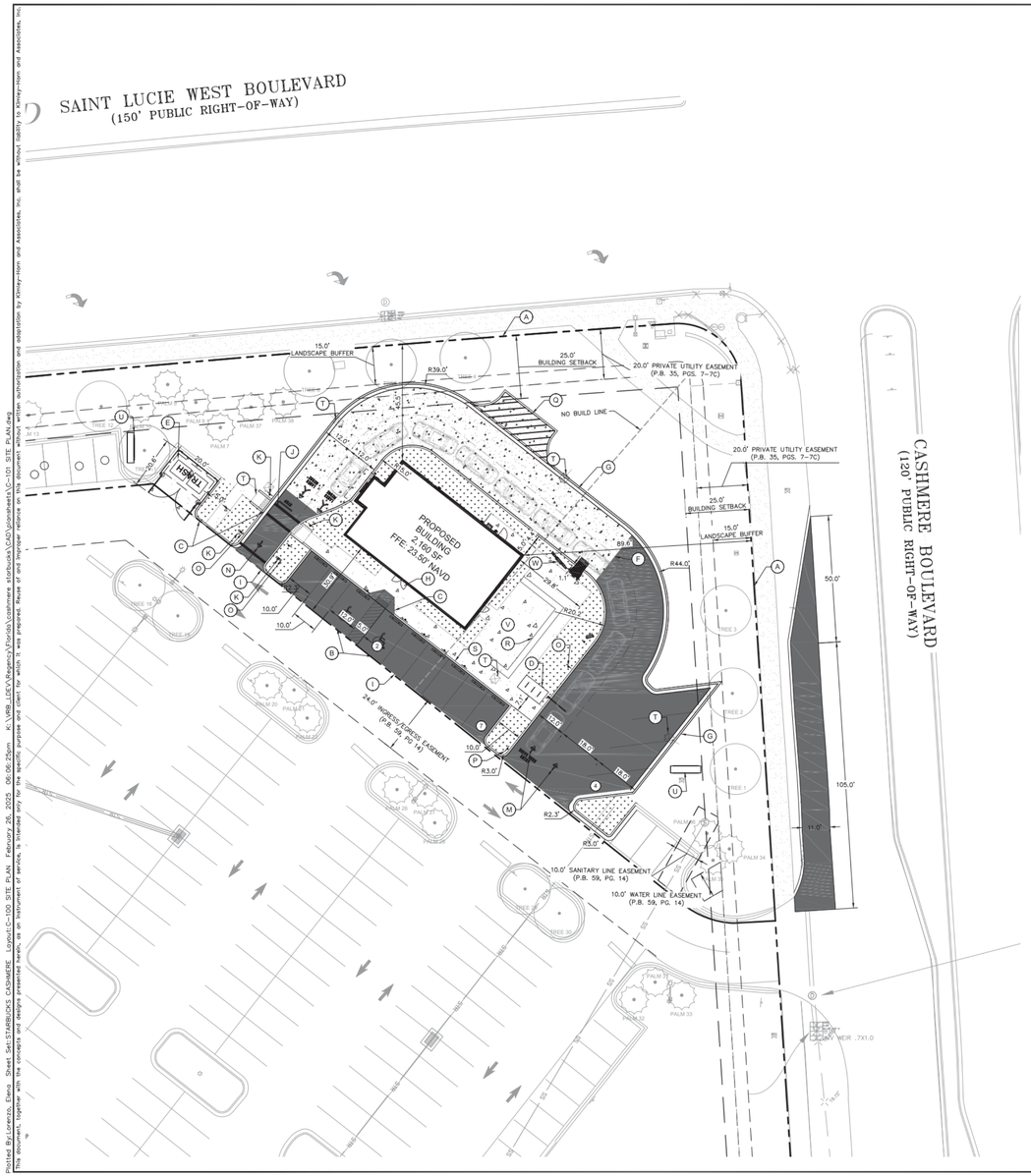

SURVEY NOTE: TREE LOCATION INFORMATION IS BASED UPON SURVEY INFO DATED 4/10/23 ALONG WITH SITE OBSERVATIONS CONDUCTED 8/23/23.

GRAPHIC SCALE IN FEET
0 10 20 40

NORTH

SITE DATA:

LOCATION:	SECTION 25 TOWNSHIP 36S RANGE 39E
PARCEL ID:	3430-602-0001-000-5
ADDRESS:	SW CORNER OF ST LUCIE WEST BOULEVARD & SW CASHMERE BOULEVARD
LEGAL DESCRIPTION:	BANKUNITED AT CASHMERE CORNERS ST LUCIE WEST PLAT NO. 188 (PB 59-14) LOT 3A PARCEL 20
ZONING:	GENERAL COMMERCIAL
FUTURE ZONING:	GENERAL COMMERCIAL
LAND USE:	VACANT LAND
TYPE OF PROJECT:	RETAIL
FLOOD ZONE:	"X" (F.I.R.M. PANEL #12111C0260J)
PROJECT AREA:	45,137 SF 1.04 AC

BUILDING ELEVATIONS:
TOP OF ROOF SCREEN: 20.83'
TOP OF PARAPET: 18.00'

BUILDING SETBACKS:

	REQUIRED	PROVIDED
NORTH	25.0'	45.9'
EAST	25.0'	89.6'
SOUTH-WEST	25.0'	30.9'

LOT COVERAGE:	ACRES	SF	PERCENTAGE &
SITE AREA:	1.04	45,137	100.00
IMPERVIOUS AREA	0.35	15,055	33.35
BUILDING COVERAGE	0.05	2,160	14.35
PAVEMENT & SIDEWALK	0.28	12,396	82.07
OUTDOOR SEATING	0.01	539	3.58
PERVIOUS AREA:	0.69	30,082	66.65

STARBUCKS PARCEL PARKING SUMMARY:

REQUIRED PARKING RATIO: 1 SPOT PER 75 SF (BUILDING)
1 SPOT PER 75 SF (OUTDOOR SEATING)

	REQUIRED	PROVIDED
STANDARD	34	28
ACCESSIBLE PER ADA	2	2
TOTAL PARKING	36	30 *

*REQUIRED PARKING NOT MET ON STARBUCKS PARCEL.
AN OVERALL SHARED PARKING AGREEMENT IS REQUIRED

SITE LEGEND

- PROPERTY LINE
- PROPOSED LANDSCAPE BUFFER
- PROPOSED BUILDING SETBACK
- PROPOSED D CURB
- STANDARD DUTY ASPHALT PAVEMENT
- HEAVY DUTY CONCRETE
- CONCRETE SIDEWALK

KEYNOTES:

(A) PROPERTY LINE
(B) ACCESSIBLE PARKING SPACE (TYP.) (REFER TO DETAIL SHEET C-150)
(C) ACCESSIBLE RAMP (REFER TO DETAIL SHEET C-150)
(D) PROPOSED BIKE RACK
(E) PROPOSED DUMPSTER
(F) 6" WHITE SKIP STRIPING
(G) PROPOSED F CURB
(H) PROPOSED BUILDING ENTRANCE
(I) PROPOSED ASPHALT TO MATCH EXISTING PAVEMENT
(J) PROPOSED CROSSWALK
(K) STOP SIGN (REFER TO FDOT R1-1)
(L) 6' HIGH CONTINUOUS VEGETATION BUFFER
(M) TRAFFIC ENTRY FLOW ARROW (REFER TO DETAIL SHEET C-150)
(N) TRAFFIC EXIT FLOW ARROW (REFER TO DETAIL SHEET C-150)
(O) ONE WAY TRAFFIC SIGN
(P) DRIVE THROUGH TRAFFIC SIGN
(Q) LOADING SPACE
(R) PROPOSED PLANTER
(S) PROPOSED D CURB
(T) PROPOSED ONSITE LIGHTING
(U) PROPOSED MONUMENT SIGN
(V) OUTDOOR SEATING AREA
(W) MENU BOARD

APPROVED BY CITY OF PORT ST. LUCIE CITY COUNCIL
CONDITIONS: YES ☑ NO ☐
DATE: 3-10-25

SITE NOTES:

1. ALL WORK AND MATERIALS SHALL COMPLY WITH ALL CITY REGULATIONS AND CODES AND O.S.H.A. STANDARDS.
2. CONTRACTOR SHALL REFER TO THE ARCHITECTURAL PLANS FOR EXACT LOCATIONS AND DIMENSIONS OF VESTIBULES, SLOPE PAVING, SIDEWALKS, EXIT PORCHES, TRUCK DOCKS, PRECISE BUILDING DIMENSIONS, EXACT BUILDING UTILITY ENTRANCE LOCATIONS AND FOR THE SITE LIGHTING ELECTRICAL PLAN.
3. ALL DISTURBED AREAS ARE TO RECEIVE FOUR INCHES OF TOPSOIL, SEED, MULCH AND WATER UNTIL A HEALTHY STAND OF GRASS IS ESTABLISHED.
4. ALL DIMENSIONS AND RADII ARE TO THE FACE OF CURB UNLESS OTHERWISE NOTED.
5. CONTRACTOR SHALL BE RESPONSIBLE FOR ALL RELOCATIONS, (UNLESS OTHERWISE NOTED ON PLANS) INCLUDING BUT NOT LIMITED TO, ALL UTILITIES, STORM DRAINAGE, SIGNS, TRAFFIC SIGNALS & POLES, ETC. AS REQUIRED. ALL WORK SHALL BE IN ACCORDANCE WITH GOVERNING AUTHORITIES REQUIREMENTS AND PROJECT SITE WORK SPECIFICATIONS AND SHALL BE APPROVED BY SUCH. ALL COST SHALL BE INCLUDED IN BASE BID.
6. SITE BOUNDARY, TOPOGRAPHY, UTILITY AND ROAD INFORMATION TAKEN FROM A SURVEY BY A LAND SURVEYOR.
7. NO WETLANDS ARE PRESENT.
8. MONUMENT SIGN FACES SHALL BE CONSTRUCTED BY OTHERS.
9. REFER TO ARCH. PLANS FOR SITE LIGHTING ELECTRICAL PLAN.
10. TYPICAL 90 °PARKING STALL DEPTH IS 18' AND TYPICAL PARKING STALL WIDTH IS 9.5' UNLESS OTHERWISE NOTED. EXISTING CONDITIONS MAY ALTER EXACT SIZE OF PARKING STALL DEPTH AND WIDTH.
11. THE DEVELOPMENT AND USE OF THIS SITE WILL COMPLY WITH CITY OF PORT ST. LUCIE ACCESS STANDARDS DEFINED BY SECTION 158.222
12. (FFPC 1-18.3.2.4.1.1) FIRE DEPARTMENT ACCESS ROADS SHALL HAVE AN UNOBSTRUCTED WIDTH OF NOT LESS THAN 20 FT. THE DRIVING SURFACE SHALL BE MAINTAINED DURING ALL PHASES OF CONSTRUCTION AND MUST BE AN ALL-WEATHER DRIVING SURFACE CAPABLE OF SUPPORTING A 32-TON EMERGENCY VEHICLE.
13. CONTRACTOR IS RESPONSIBLE TO PROTECT AND/OR REPLACE POST CONSTRUCTION ALL SURVEY MONUMENTATION WITHIN THE PROJECT LIMITS BY A FLORIDA LICENSED LAND SURVEYOR.

CALL 48 HOURS BEFORE YOU DIG
IT'S THE LAW!
DIAL 811
811 Know what's below. Call before you dig.
SUNSHINE STATE ONE CALL OF FLORIDA, INC.

No.	REVISIONS	DATE	BY

Kimley»Horn
© 2024 KIMLEY-HORN AND ASSOCIATES, INC.
445 24TH STREET, SUITE 200, VERO BEACH, FL 32960
PHONE: 772-794-4100
WWW.KIMLEY-HORN.COM REGISTRY NO. 35106

SAM CHARLES GREEN BATTLES LICENSE No. 72884 STATE OF FLORIDA PROFESSIONAL ENGINEER

KHA PROJECT 047427053
DATE 02/26/2025
SCALE AS SHOWN
DESIGNED BY JC
DRAWN BY JC
CHECKED BY SRB

SITE PLAN

STARBUCKS CASHMERE
PREPARED FOR REGENCY
CITY OF PORT ST. LUCIE FLORIDA

P24-148

SHEET NUMBER
C-100

FOR REFERENCE ONLY

PERMIT SET - FOR CONSTRUCTION USE

© 2022 STARBUCKS COFFEE COMPANY

STARBUCKS®
2401 UTAH AVENUE SOUTH
SEATTLE, WASHINGTON 98134
(206) 318-1575

THESE DRAWINGS AND THE PROJECT MANUAL ARE CONFIDENTIAL AND SHALL REMAIN THE SOLE PROPERTY OF STARBUCKS CORPORATION, WHICH IS THE OWNER OF THE COPYRIGHT IN THIS WORK. THEY SHALL NOT BE REPRODUCED (IN WHOLE OR IN PART), SHARED WITH THIRD PARTIES OR USED IN ANY MANNER ON OTHER PROJECTS OR EXTENSIONS TO THIS PROJECT WITHOUT THE PRIOR WRITTEN CONSENT OF STARBUCKS CORPORATION. THESE DRAWINGS AND SPECIFICATIONS ARE INTENDED TO EXPRESS DESIGN INTENT FOR A PROTOTYPICAL STARBUCKS STORE (WHICH IS SUBJECT TO CHANGE AT ANYTIME) AND DO NOT REFLECT ACTUAL SITE CONDITIONS. NEITHER PARTY SHALL HAVE ANY OBLIGATION NOR LIABILITY TO THE OTHER (EXCEPT STATED ABOVE) UNTIL A WRITTEN AGREEMENT IS FULLY EXECUTED BY BOTH PARTIES.

STARBUCKS TEMPLATE VERSION: i2023.04.24

PABLO GARCIA, AIA, REG. FL NO. AR99297

Gensler
MAIN OFFICE
M. ARTHUR GENSLER JR. & ASSOCIATES
220 MONTGOMERY STREET, SUITE 200
SAN FRANCISCO, CA 94104 USA
Tel (415) 433.3700
Fax (415) 836.4599

SATELLITE OFFICE
M. ARTHUR GENSLER JR. & ASSOCIATES
FL QUALIFIER'S LIC. NO. AR96486
545 NW 26TH ST
SUITE 250
MIAMI, FL 33127 USA
Tel (305) 350.7070
Fax (305) 350.7071

PROJECT NAME:
ST LUCIE WEST & SW CASHEMERE BLVD

PROJECT ADDRESS:
920 SW SAINT LUCIE BLVD, PORT ST.LUCIE, FL 34986

STORE #:	81616
PROJECT #:	101357-001
ISSUE DATE:	07-08-2025
DESIGN MANAGER:	ASHLEY SUEIRAS
PRODUCTION DESIGNER:	GENSLER
CHECKED BY:	GENSLER

Revision Schedule

Rev	Date	By	Description

SHEET TITLE:
APPROVED SITE PLAN

SCALE: AS SHOWN

SHEET NUMBER:
A001

Plotted By:Lorenzo, Elena Sheet Set:STARBUCKS CASHMERE Layout:C-100 SITE PLAN February 26, 2025, 06:06:25pm K:\VRB_LDEV\Regency\Florida\cashmere starbucks\CAD\plansheets\C-101 SITE PLAN.dwg
This document, together with the concepts and designs presented herein, as an instrument of service, is intended only for the specific purpose and client for which it was prepared. Reuse of and improper reliance on this document without written authorization and adaptation by Kimley-Horn and Associates, Inc. shall be without liability to Kimley-Horn and Associates, Inc.

WALL BLOCKING KEY

SYMBOL	ITEM	WEIGHT	HEIGHT A.F.F.	APPROX. WIDTH
A	WORKROOM HAND SINK	128 LBS (58 KG)	36" TO 40" (915MM TO 1015MM)	30" (760MM) BEHIND SINK
B	SHELVES ABOVE COMPARTMENT SINK	200 LBS (91 KG)	48" TO 76" (1220MM TO 1930MM)	96" (2440MM) CENTERED ABOVE COMPARTMENT SINK
C	UPPER WIRE SHELVES	BLOCKING SPECIFICATION TO BE PROVIDED BY VENDOR		
D	SHELVES AT MANAGER'S DESK	300 LBS (136 KG)	32" TO 96" (810MM TO 2440MM)	48" (1220MM) 3/4 (19MM) ACX PLYWOOD, CENTERED ON SHELVES
E	EQUIPMENT RACK AT MANAGER'S DESK	300 LBS (136 KG)	44" TO 96" (1120MM TO 2440MM)	28" (710MM) 3/4 (19MM) ACX PLYWOOD, CENTERED ON RACK
F	RESTROOM GRAB BARS	200 LBS (91 KG)	30" TO 36" (760MM TO 915MM)	60" (1525MM) AROUND WATER CLOSET
G	RESTROOM HAND SINK	200 LBS (91 KG)	COMMERCIAL INSTALLATION REQUIRES CONCEALED ARM CARRIER. REFER TO MFR'S SPECIFICATION.	
H	MILLWORK BOXES	BLOCKING SPECIFICATION FOR FRENCH CLEATING SYSTEM. REFER TO DETAILS.		
I	DIAPER CHANGING STATION	250 LBS (113 KG)	40 1/2" TO 46 1/2" (1030MM TO 1180MM)	32" (810MM) BEHIND STATION
J	UPPER SHELVING & ADAPTABLE CASEWORK	BLOCKING SPECIFICATION FULL HEIGHT. REFER TO VENDOR'S SPECIFICATION AND DETAILS.		
K	WATER FILTRATION SYSTEM	TBD BY VENDOR	COORDINATE LOCATION AND EXTENT WITH PENTAIR	
L	RESTROOM HAND DRYER	200 LBS (91 KG)	36" TO 48" (915MM TO 1219MM)	24" STARTING 18" FROM WALL CORNER / SEE PLAN
M	ADAPTABLE CASEWORK	BLOCKING SPECIFICATION FOR ADAPTABLE CASEWORK. REFER TO VENDOR'S SPECIFICATION AND DETAILS.		
N	ALL ARTWORK, FIXTURES, ACCESSORIES AND CASEWORK FABRICATIONS NOT OTHERWISE NOTED	TBD BY VENDOR (VARIES)	GC TO PROVIDE WALL BLOCKING AS REQUIRED FOR ALL ITEMS FOR A COMPLETE AND SECURE INSTALLATION. EXTEND BLOCKING 8" (205MM) BEYOND ON EACH SIDE OF EACH ITEM.	
O	MENU BOARDS	300 LBS	72" TO 112" (1829MM TO 2845MM)	UPPER SOFFIT. EXTEND BLOCKING 6" (152MM) BEYOND ON EACH SIDE OF EACH ITEM.
P	5-COMP LOCKERS	200 LBS	0" TO 66" (0MM TO 1679MM)	SEE PLAN

WALL SHEATHING KEY

SYMBOL	DESCRIPTION
▲	INDICATES SHEATHING TRANSITION.
A	5/8" GYP. WALL BOARD (FULL WALL HEIGHT).
B	5/8" GYP. WALL BOARD (TERMINATE AT 6" (150MM) ABOVE CEILING).
C	5/8" CEMENTITIOUS BACKER BOARD (TERMINATE AT 6" (150MM) ABOVE CEILING).
D	5/8" FIRE RATED PLYWOOD (TERMINATE AT FINISH TRANSITION AS SHOWN ON INTERIOR ELEVATION W/ 5/8" MOISTURE RESISTANT BOARD ABOVE (TERMINATE AT 6" (150MM) ABOVE CEILING).
E	5/8" FIRE RATED PLYWOOD (TERMINATE AT 6" (150MM) ABOVE CEILING).
F	5/8" MOISTURE RESISTANT BOARD (TERMINATE AT 6" (150MM) ABOVE CEILING).

INTERIOR WALL SCHEDULE

TAG	DESCRIPTION	INSULATION	NOTES
2-T-N	3 5/8" 20 GA STUDS @ 16" O.C. FURRING WALL	NONE	TERMINATE 6" ABOVE CEILING. SEE PLAN FOR WALL SHEATHING.
3-F-N	3 5/8" 20 GA STUDS @ 16" O.C.	NONE	FULL HT. WALL. SEE PLAN FOR WALL SHEATHING.
3-P-N	3 5/8" 16 GA STUDS @ 16" O.C.	NONE	PARTIAL HT. WALL W/ RCKW RIGID CONNECTORS AT FLOOR. SEE ELEVATIONS FOR WALL HT. SEE PLAN FOR WALL SHEATHING.
3-T-A	3 5/8" 20 GA STUDS @ 16" O.C.	ACOUSTIC	TERMINATE 6" ABOVE CEILING. PROVIDE 45 DEGREE METAL STUD BRACING AT 48" O.C. FROM STUD WALL TO STRUCTURE ABOVE. SEE PLAN FOR WALL SHEATHING.
3-T-N	3 5/8" 20 GA STUDS @ 16" O.C.	NONE	TERMINATE 6" ABOVE CEILING. PROVIDE 45 DEGREE METAL STUD BRACING AT 48" O.C. FROM STUD WALL TO STRUCTURE ABOVE. SEE PLAN FOR WALL SHEATHING.
4-F-A	6" 20 GA STUDS @ 16" O.C.	ACOUSTIC	FULL HT. WALL. SEE PLAN FOR WALL SHEATHING.
4-T-A	6" 20 GA STUDS @ 16" O.C.	ACOUSTIC	TERMINATE 6" ABOVE CEILING. PROVIDE 45 DEGREE METAL STUD BRACING AT 48" O.C. FROM STUD WALL TO STRUCTURE ABOVE. SEE PLAN FOR WALL SHEATHING.
4-T-N	6" 20 GA STUDS @ 16" O.C.	NONE	TERMINATE 6" ABOVE CEILING. PROVIDE 45 DEGREE METAL STUD BRACING AT 48" O.C. FROM STUD WALL TO STRUCTURE ABOVE. SEE PLAN FOR WALL SHEATHING.
6-T-N	3 5/8" 20 GA STUDS @ 16" O.C.	NONE	TERMINATE 6" ABOVE CEILING. PROVIDE 45 DEGREE METAL STUD BRACING AT 48" O.C. FROM STUD WALL TO STRUCTURE ABOVE. SEE PLAN FOR WALL SHEATHING.

GENERAL LEGEND

- NEW FULL HEIGHT WALL
- NEW LIGHT GAUGE WALL
- NEW PARTIAL HEIGHT WALL
- EXISTING WALL
- NEW CONCRETE FILL SLAB
- XX — WALL BLOCKING CALL-OUT
- XX — WALL SHEATHING CALL-OUT
- D ##### XX — DOOR TAG
- X-X-X — INTERIOR WALL TAG

KEYED NOTES

01 EXISTING STOREFRONT DOOR. GC TO ENSURE PROPER WORKING ORDER AND REPAIR AS NECESSARY. REPLACE HARDWARE AS SHOWN IN MAIN ENTRANCE.
02 EXISTING STOREFRONT WINDOW SYSTEM. GC TO PROTECT DURING CONSTRUCTION, CLEAN TO "LIKE NEW" CONDITION AND REPAIR AS NECESSARY.
03 EXISTING SERVICE DOOR. GC TO ENSURE PROPER WORKING ORDER.
04 SHELF FOR WATER HEATER ABOVE.
05 ELECTRICAL PANEL LOCATIONS. MAINTAIN MINIMUM CLEARANCE AS REQUIRED BY CODE.
06 FIRE EXTINGUISHER LOCATION.
07 OUTLINE OF HEADER ABOVE.
08 OUTLINE OF BAR PER CASEWORK MANUFACTURER. FOR THE BACK BAR, PROVIDE 3/4" BLOCKING TO 34" AFF FOR ALL WALL BRACKETS TO SUPPORT CASEWORK LEGS.
09 BANQUETTES WITH POWER. REFER TO DETAIL.
11 OUTLINE OF SOFFIT ABOVE.
12 EXISTING LL FUR OUT (6"). LL TO COORDINATE INTERIOR FACE OF WALL WITH SHEATHING AS INDICATED.
13 RECECESSED WALK OFF MATT, CAST-IN RECESSES AS REQUIRED. REFER TO FLOOR FINISH PLAN.
14 CONSTRUCT NEW 2' - 0" HIGH PARTIAL- HEIGHT WALL AS INDICATED. PROVIDE KNEE BRACE KIT #SKB AS MANUFACTURED BY PITTCON INDUSTRIES @ 4' - 0" O.C. MAXIMUM FINISH ALL EXPOSED EDGES.
15 DOOR ACTUATOR MOUNTED TO EXISTING WALL. ADD BLOCKING BY MFR'S SPECS. REFER TO A601.
16 OUTLINE OF AWNING ABOVE.
17 LIGHT GAUGE METAL FRAMING REFER TO STRUCTURAL DRAWING'S FOR ADDITIONAL INFORMATION.
22 OUTLINE OF COMMUNITY TABLE.
24 PROVIDED BY LL.

GENERAL NOTES

A. GENERAL CONTRACTOR TO VERIFY ALL DIMENSIONS AND NOTIFY STARBUCKS CONSTRUCTION MANAGER OF ANY DISCREPANCIES PRIOR TO CONSTRUCTION. ALL DIMENSIONS TO BE TAKEN FROM DESIGNATED DATUM POINT.

B. GENERAL CONTRACTOR TO PROVIDE FIRE TREATED 2X WOOD BLOCKING OR EQUIVALENT FOR COMPLETE AND SECURE SUPPORT OF ANY WALL MOUNTED EQUIPMENT, CABINETRY, FURNISHINGS, ARTWORK AND/OR SIGNAGE.

C. IF EXISTING EXTERIOR ENTRANCE THRESHOLD EXCEEDS MINIMUM BARRIER FREE PROVISION OF THE CODE, REMOVE AND REPLACE WITH ACCESSIBLE THRESHOLD. RAISED THRESHOLDS AND FLOOR LEVEL CHANGES AT ACCESSIBLE DOORWAYS TO BE BEVELED WITH A SLOPE NO GREATER THAN 1:12.

D. ALL DIMENSIONS ARE TO FINISHED FACE UNLESS SHOWN OR NOTED OTHERWISE.

E. INSTALL MOISTURE RESISTANT GREEN BOARD ON BACKBAR WALL PER PROJECT MANUAL.

F. ALL DOORS SHALL BE 32" (815MM) MINIMUM CLEAR OPENING WHEN OPENED TO 90 DEGREE POSITION UNLESS OTHERWISE NOTED.

G. SEE SHEET A601 FOR EXTERIOR DOOR AND WINDOW SCHEDULES.

H. STARBUCKS VENDOR TO PROVIDE DOOR HARDWARE COMPONENTS AND GC TO INSTALL.

I. VERIFY ALL EXISTING DOORS, HARDWARE AND FRAMES MEET STARBUCKS AND/OR CODE REQUIREMENTS.

J. PROVIDE FIRE EXTINGUISHERS AS NOTED ON THE APPROVED PLANS FROM THE CITY.

K. SEE STRUCTURAL FOR KNEE WALL BRACING.

L. SEE SHEET A501 FOR BUILDING DETAILS.

M. REFER TO SHEET I104 FOR FLOOR FINISHES.

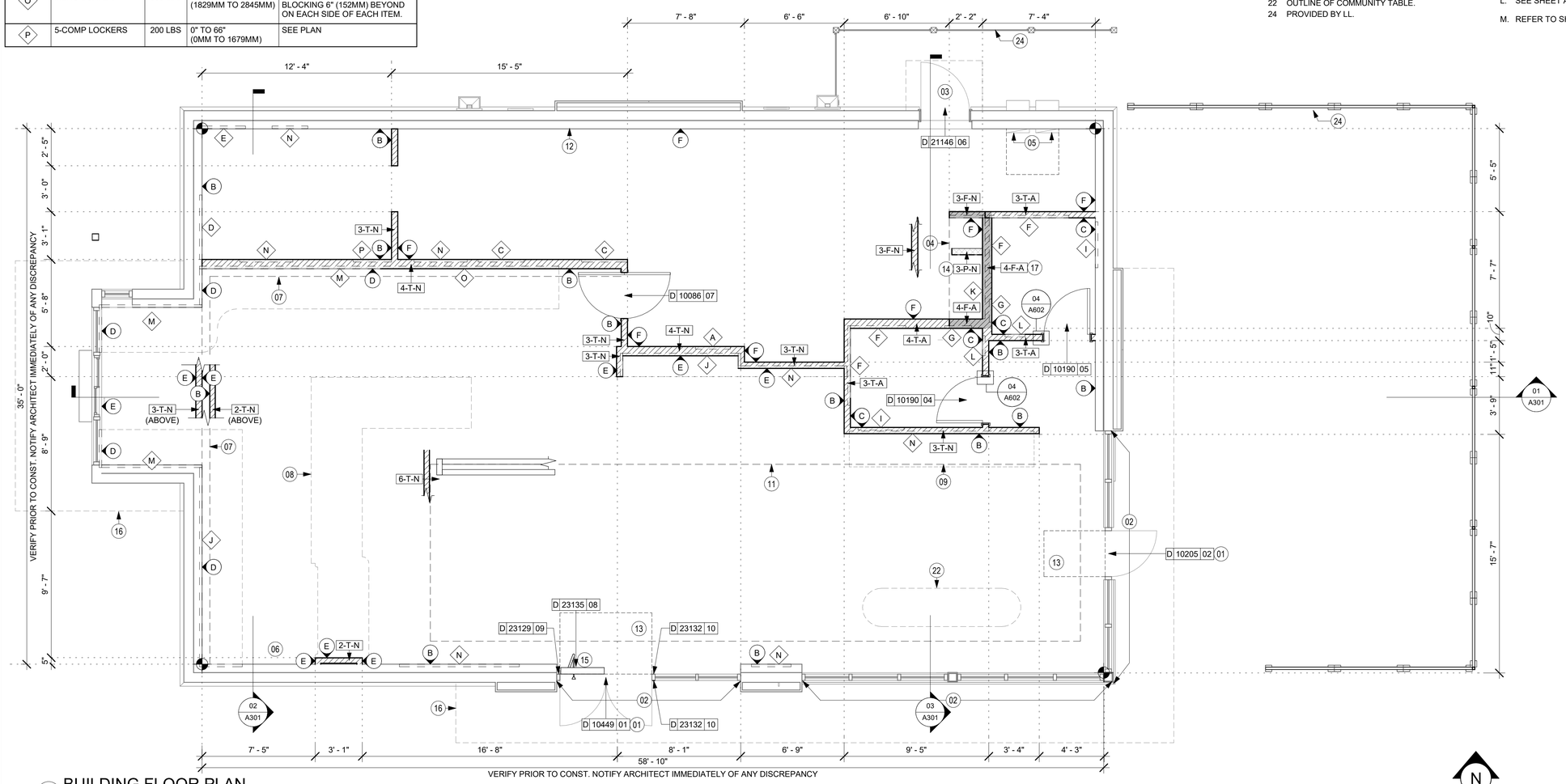

01 BUILDING FLOOR PLAN
Scale: 1/4" = 1'-0"

PERMIT SET - FOR CONSTRUCTION USE

© 2022 STARBUCKS COFFEE COMPANY

STARBUCKS®
2401 UTAH AVENUE SOUTH
SEATTLE, WASHINGTON 98134
(206) 318-1575

THESE DRAWINGS AND THE PROJECT MANUAL ARE CONFIDENTIAL AND SHALL REMAIN THE SOLE PROPERTY OF STARBUCKS CORPORATION, WHICH IS THE OWNER OF THE COPYRIGHT IN THIS WORK. THEY SHALL NOT BE REPRODUCED (IN WHOLE OR IN PART), SHARED WITH THIRD PARTIES OR USED IN ANY MANNER ON OTHER PROJECTS OR EXTENSIONS TO THIS PROJECT WITHOUT THE PRIOR WRITTEN CONSENT OF STARBUCKS CORPORATION. THESE DRAWINGS AND SPECIFICATIONS ARE INTENDED TO EXPRESS DESIGN INTENT FOR A PROTOTYPICAL STARBUCKS STORE (WHICH IS SUBJECT TO CHANGE AT ANYTIME) AND DO NOT REFLECT ACTUAL SITE CONDITIONS. NEITHER PARTY SHALL HAVE ANY OBLIGATION NOR LIABILITY TO THE OTHER (EXCEPT STATED ABOVE) UNTIL A WRITTEN AGREEMENT IS FULLY EXECUTED BY BOTH PARTIES.

STARBUCKS TEMPLATE VERSION: i2023.04.24

PABLO GARCIA, AIA, REG. FL NO. AR99297

Gensler
MAIN OFFICE
M. ARTHUR GENSLER JR. & ASSOCIATES
220 MONTGOMERY STREET, SUITE 200
SAN FRANCISCO, CA 94104 USA
Tel (415) 433.3700
Fax (415) 836.4599

SATELLITE OFFICE
M. ARTHUR GENSLER JR. & ASSOCIATES
FL QUALIFIER'S LIC. NO. AR96486
543 NW 26TH ST
SUITE 250
MIAMI, FL 33127 USA
Tel (305) 350.7070
Fax (305) 350.7071

PROJECT NAME:
ST LUCIE WEST & SW CASHEMERE BLVD

PROJECT ADDRESS:
920 SW SAINT LUCIE BLVD, PORT ST.LUCIE, FL 34986

STORE #:	81616
PROJECT #:	101357-001
ISSUE DATE:	07-08-2025
DESIGN MANAGER:	ASHLEY SUEIRAS
PRODUCTION DESIGNER:	GENSLER
CHECKED BY:	GENSLER

Revision Schedule

Rev	Date	By	Description

SHEET TITLE:
BUILDING FLOOR PLAN

SCALE: AS SHOWN

SHEET NUMBER:
A101

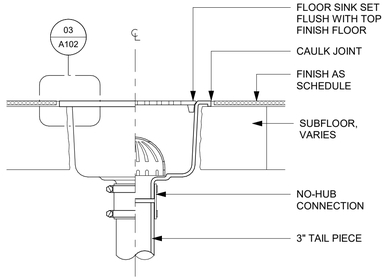

02 FLOOR SINK SECTION
Scale: 3" = 1'-0"

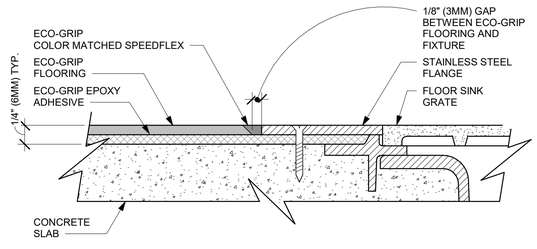

03 ECO-GRIP TO FLOOR SINK TRANSITION
Scale: 12" = 1'-0"

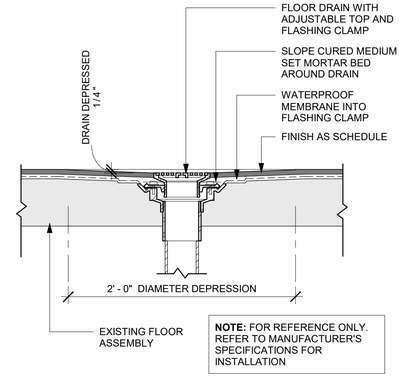

04 FLOOR DRAIN SECTION
Scale: 1 1/2" = 1'-0"

KEYED NOTES

01 OUTLINE OF ENGINE FOR REFERENCE.
02 PROPOSED LOCATION OF CASEWORK DIEWALL. GC TO COORDINATE WITH CASEWORK VENDOR FOR LOCATION ON SITE.
03 DEPRESSED SLAB FOR RECESSED WALK-OFF MAT.
04 BANQUETTES WITH POWER. FLOOR ELECTRICAL OUTLET. SEE ELECTRICAL SHEETS. REFER TO DETAIL.
05 LOCATION OF POWER AND DATA OUTLETS BEHIND MENU BOARDS. CENTER OUTLETS BEHIND MENU BOARDS. REFER TO DETAIL 2/I-509 FOR MORE INFORMATION.
06 HAND SINK LOCATION.
08 COMMUNITY TABLE WITH POWER. REFER TO DETAIL AT A501.
09 FLOOR ELECTRICAL OUTLET. SEE ELECTRICAL SHEETS.

GENERAL NOTES

A. ALL STUB-UP DIMENSIONS ARE RELATIVE TO FINISHED WALL LOCATIONS (SHOWN AS OUTLINES ON THIS PLAN). REFER TO FLOOR PLAN FOR WALL PLACEMENT.

B. FLOOR SINK: REFER TO CUT SHEETS FOR COMPONENT SPECIFICATIONS AND CUTOUT REQUIREMENTS.

C. WASTE LINE PENETRATIONS: REFER TO PLUMBING PLANS FOR INDIVIDUAL LINE LOCATIONS.

D. STUB-UP PENETRATIONS: REFER TO ELECTRICAL AND PLUMBING PLANS FOR INDIVIDUAL STUB-UP LOCATIONS.

E. TOILET FLOOR PENETRATION: REFER TO CUT SHEETS FOR STUB-UP LOCATION RELATIVE TO FINISHED WALL.

F. PENETRATION TO BE LOCATED ON CENTERLINE OF WALL OR AS REQUIRED PER CONDITIONS.

G. TRENCHING OUTLINE FOR GUIDELINE USE ONLY. GENERAL CONTRACTOR TO COORDINATE WITH SPECIFIC TRADES AND SITE CONDITIONS TO DETERMINE ACTUAL LAYOUT.

H. REFER TO SHEET I101 FOR FLOOR FINISHES.

LEGEND

- EXISTING WALL
- EXISTING CONCRETE LEAVE-OUT, GC TO ADD CONCRETE SLAB ON GRADE AFTER INSTALLATIONS, AS PER STRUCTURAL DRAWINGS.
- DATUM POINT
- FLOOR DRAIN
- FLOOR CLEAN-OUT
- FLOOR SINK
- WASTE LINE PENETRATION
- PLUMBING STUB-UP PENETRATION
- ELECTRICAL STUB-UP PENETRATION

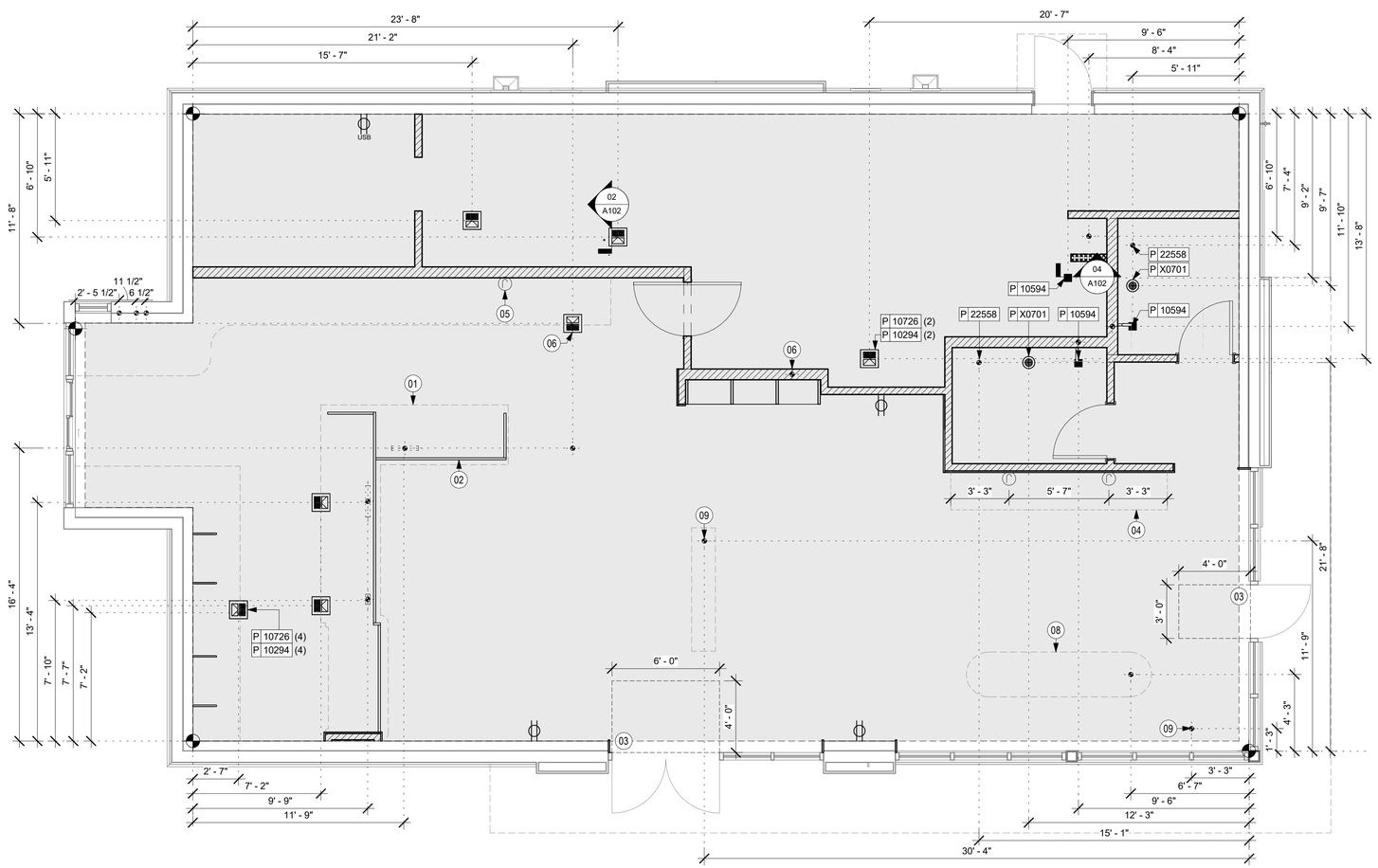

01 FLOOR PENETRATION PLAN
Scale: 1/4" = 1'-0"

PERMIT SET - FOR CONSTRUCTION USE

© 2022 STARBUCKS COFFEE COMPANY

STARBUCKS®
2401 UTAH AVENUE SOUTH
SEATTLE, WASHINGTON 98134
(206) 318-1575

THESE DRAWINGS AND THE PROJECT MANUAL ARE CONFIDENTIAL AND SHALL REMAIN THE SOLE PROPERTY OF STARBUCKS CORPORATION, WHICH IS THE OWNER OF THE COPYRIGHT IN THIS WORK. THEY SHALL NOT BE REPRODUCED (IN WHOLE OR IN PART), SHARED WITH THIRD PARTIES OR USED IN ANY MANNER ON OTHER PROJECTS OR EXTENSIONS TO THIS PROJECT WITHOUT THE PRIOR WRITTEN CONSENT OF STARBUCKS CORPORATION. THESE DRAWINGS AND SPECIFICATIONS ARE INTENDED TO EXPRESS DESIGN INTENT FOR A PROTOTYPICAL STARBUCKS STORE (WHICH IS SUBJECT TO CHANGE AT ANYTIME) AND DO NOT REFLECT ACTUAL SITE CONDITIONS. NEITHER PARTY SHALL HAVE ANY OBLIGATION NOR LIABILITY TO THE OTHER (EXCEPT STATED ABOVE) UNTIL A WRITTEN AGREEMENT IS FULLY EXECUTED BY BOTH PARTIES.

STARBUCKS TEMPLATE VERSION: i2023.04.24

PABLO GARCIA, AIA, REG. FL NO. AR99297

Gensler

MAIN OFFICE
M. ARTHUR GENSLER JR. & ASSOCIATES
220 MONTGOMERY STREET, SUITE 200
SAN FRANCISCO, CA 94104 USA
Tel (415) 433.3700
Fax (415) 836.4599

SATELLITE OFFICE
M. ARTHUR GENSLER JR. & ASSOCIATES
FL QUALIFIER'S LIC. NO. AR96486
545 NW 26TH ST
SUITE 250
MIAMI, FL 33127 USA
Tel (305) 350.7070
Fax (305) 350.7071

PROJECT NAME:
ST LUCIE WEST & SW CASHEMERE BLVD

PROJECT ADDRESS:
920 SW SAINT LUCIE BLVD, PORT ST.LUCIE, FL 34986

STORE #:	81616
PROJECT #:	101357-001
ISSUE DATE:	07-08-2025
DESIGN MANAGER:	ASHLEY SUEIRAS
PRODUCTION DESIGNER:	GENSLER
CHECKED BY:	GENSLER

Revision Schedule

Rev	Date	By	Description

SHEET TITLE:
BUILDING FLOOR PENETRATION PLAN
SCALE: AS SHOWN

SHEET NUMBER:
A102

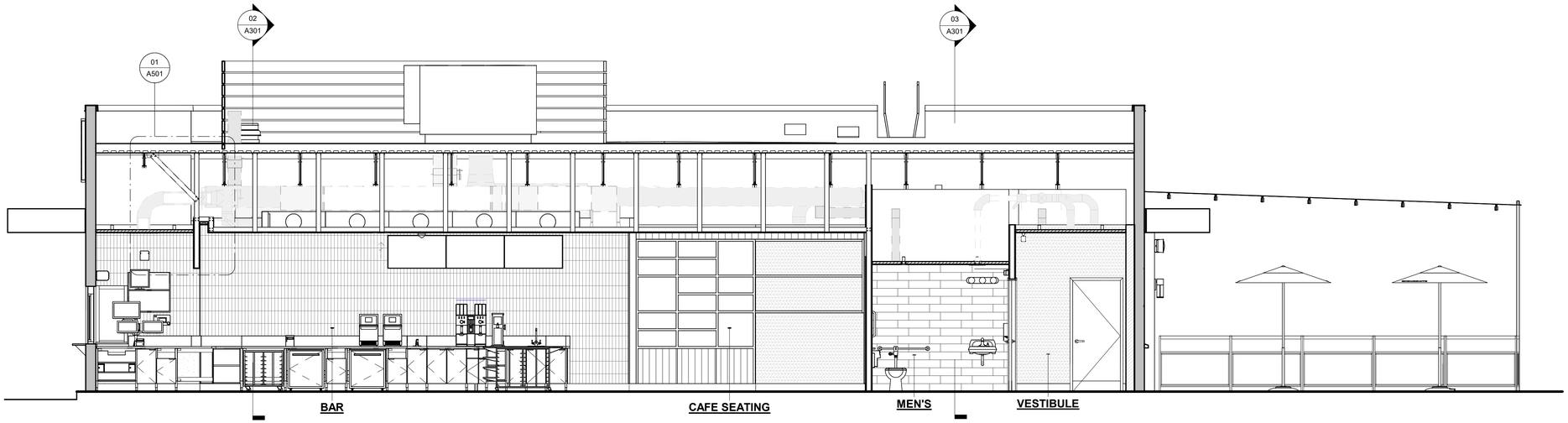

01 SECTION A-A
Scale: 1/4" = 1'-0"

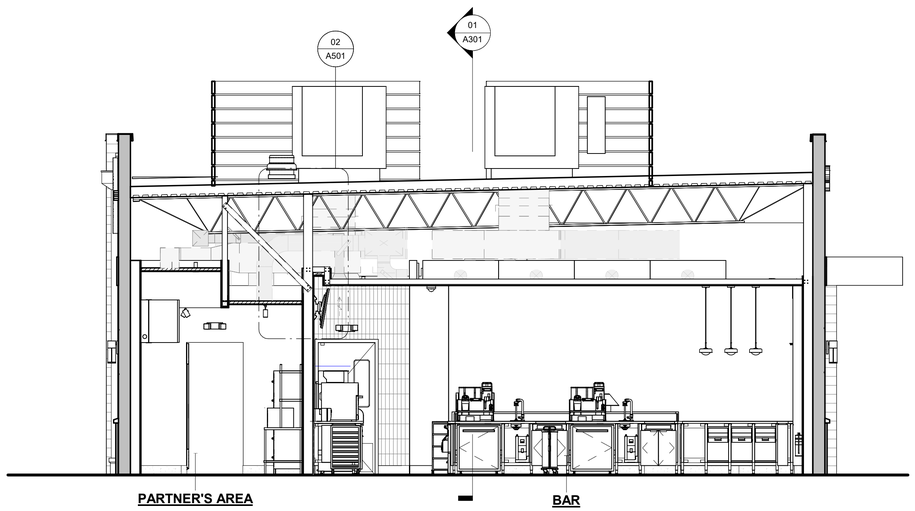

02 SECTION B-B
Scale: 1/4" = 1'-0"

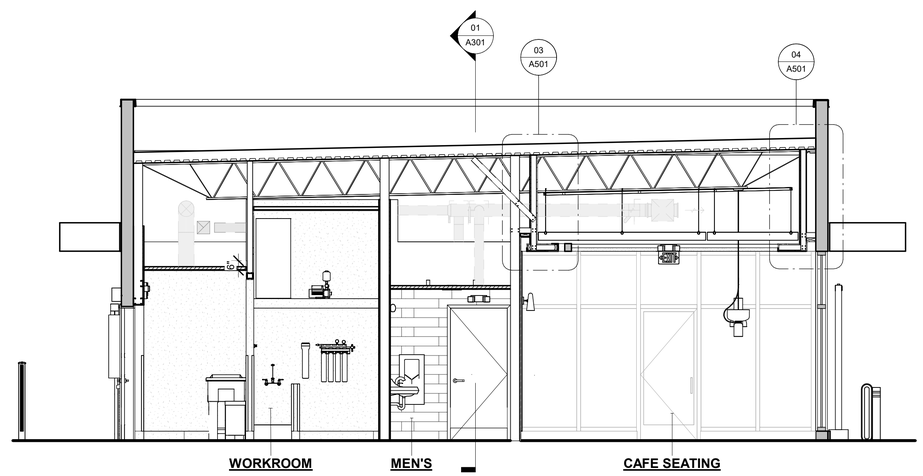

03 SECTION C-C
Scale: 1/4" = 1'-0"

PERMIT SET - FOR CONSTRUCTION USE

© 2022 STARBUCKS COFFEE COMPANY

STARBUCKS®
2401 UTAH AVENUE SOUTH
SEATTLE, WASHINGTON 98134
(206) 318-1575

THESE DRAWINGS AND THE PROJECT MANUAL ARE CONFIDENTIAL AND SHALL REMAIN THE SOLE PROPERTY OF STARBUCKS CORPORATION, WHICH IS THE OWNER OF THE COPYRIGHT IN THIS WORK. THEY SHALL NOT BE REPRODUCED (IN WHOLE OR IN PART), SHARED WITH THIRD PARTIES OR USED IN ANY MANNER ON OTHER PROJECTS OR EXTENSIONS TO THIS PROJECT WITHOUT THE PRIOR WRITTEN CONSENT OF STARBUCKS CORPORATION. THESE DRAWINGS AND SPECIFICATIONS ARE INTENDED TO EXPRESS DESIGN INTENT FOR A PROTOTYPICAL STARBUCKS STORE (WHICH IS SUBJECT TO CHANGE AT ANYTIME) AND DO NOT REFLECT ACTUAL SITE CONDITIONS. NEITHER PARTY SHALL HAVE ANY OBLIGATION NOR LIABILITY TO THE OTHER (EXCEPT STATED ABOVE) UNTIL A WRITTEN AGREEMENT IS FULLY EXECUTED BY BOTH PARTIES.

STARBUCKS TEMPLATE VERSION: i2023.04.24

PABLO GARCIA, AIA, REG. FL NO. AR99297

Gensler

MAIN OFFICE
M. ARTHUR GENSLER JR. & ASSOCIATES
220 MONTGOMERY STREET, SUITE 200
SAN FRANCISCO, CA 94104 USA
Tel (415) 433.3700
Fax (415) 836.4599

SATELLITE OFFICE
M. ARTHUR GENSLER JR. & ASSOCIATES
FL QUALIFIER'S LIC. NO. AR96486
545 NW 26TH ST
SUITE 250
MIAMI, FL 33127 USA
Tel (305) 350.7070
Fax (305) 350.7071

PROJECT NAME:
ST LUCIE WEST & SW CASHEMERE BLVD

PROJECT ADDRESS:
920 SW SAINT LUCIE BLVD, PORT ST.LUCIE, FL 34986

STORE #:	81616
PROJECT #:	101357-001
ISSUE DATE:	07-08-2025
DESIGN MANAGER:	ASHLEY SUEIRAS
PRODUCTION DESIGNER:	GENSLER
CHECKED BY:	GENSLER

Revision Schedule

Rev	Date	By	Description

SHEET TITLE:
BUILDING SECTIONS

SCALE: AS SHOWN

SHEET NUMBER:
A301

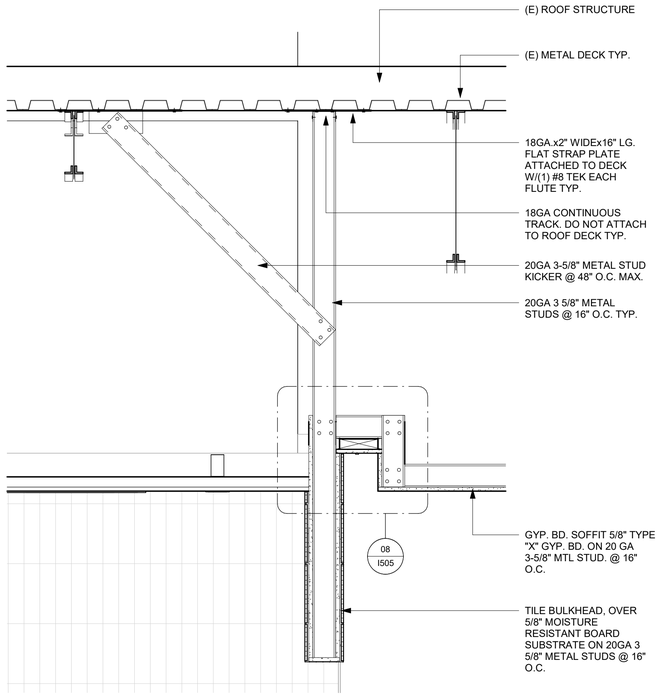

01 SOFFIT CONSTRUCTION AT DT BUMP

Scale: 1" = 1'-0"

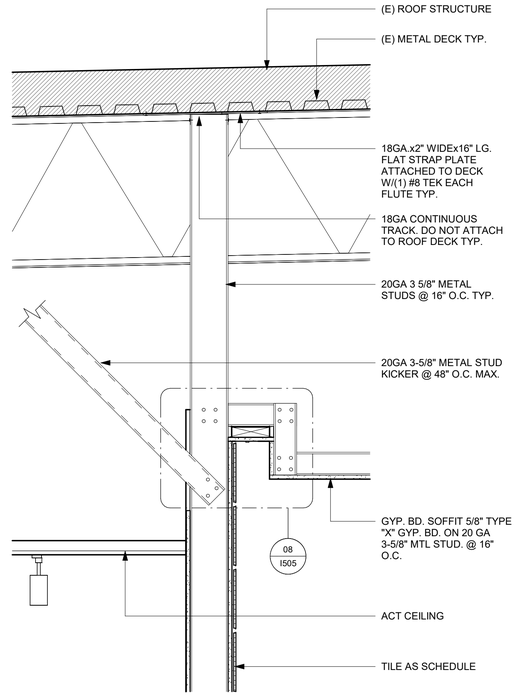

02 SOFFIT CONSTRUCTION AT ENGINE

Scale: 1" = 1'-0"

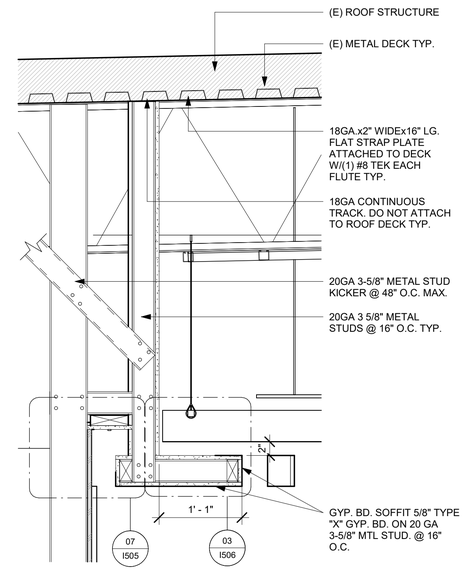

03 SOFFIT CONSTRUCTION AT BANQUETTE

Scale: 1" = 1'-0"

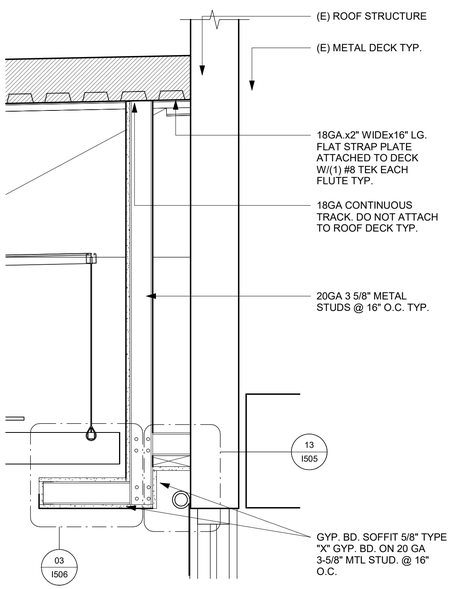

04 SOFFIT CONSTRUCTION AT STOREFRONT

Scale: 1" = 1'-0"

PERMIT SET - FOR CONSTRUCTION USE

© 2022 STARBUCKS COFFEE COMPANY

STARBUCKS®
2401 UTAH AVENUE SOUTH
SEATTLE, WASHINGTON 98134
(206) 318-1575

THESE DRAWINGS AND THE PROJECT MANUAL ARE CONFIDENTIAL AND SHALL REMAIN THE SOLE PROPERTY OF STARBUCKS CORPORATION, WHICH IS THE OWNER OF THE COPYRIGHT IN THIS WORK. THEY SHALL NOT BE REPRODUCED (IN WHOLE OR IN PART), SHARED WITH THIRD PARTIES OR USED IN ANY MANNER ON OTHER PROJECTS OR EXTENSIONS TO THIS PROJECT WITHOUT THE PRIOR WRITTEN CONSENT OF STARBUCKS CORPORATION. THESE DRAWINGS AND SPECIFICATIONS ARE INTENDED TO EXPRESS DESIGN INTENT FOR A PROTOTYPICAL STARBUCKS STORE (WHICH IS SUBJECT TO CHANGE AT ANYTIME) AND DO NOT REFLECT ACTUAL SITE CONDITIONS. NEITHER PARTY SHALL HAVE ANY OBLIGATION NOR LIABILITY TO THE OTHER (EXCEPT STATED ABOVE) UNTIL A WRITTEN AGREEMENT IS FULLY EXECUTED BY BOTH PARTIES.

STARBUCKS TEMPLATE VERSION: i2023.04.24

PABLO GARCIA, AIA, REG. FL NO. AR99297

Gensler

MAIN OFFICE
M. ARTHUR GENSLER JR. & ASSOCIATES
220 MONTGOMERY STREET, SUITE 200
SAN FRANCISCO, CA 94104 USA
Tel (415) 433.3700
Fax (415) 836.4599

SATELLITE OFFICE
M. ARTHUR GENSLER JR. & ASSOCIATES
FL QUALIFIER'S LIC. NO: AR96486
545 NW 26TH ST
SUITE 250
MIAMI, FL 33127 USA
Tel (305) 350.7070
Fax (305) 350.7071

PROJECT NAME:
ST LUCIE WEST & SW CASHEMERE BLVD

PROJECT ADDRESS:
920 SW SAINT LUCIE BLVD, PORT ST.LUCIE, FL 34986

STORE #:	81616
PROJECT #:	101357-001
ISSUE DATE:	07-08-2025
DESIGN MANAGER:	ASHLEY SUEIRAS
PRODUCTION DESIGNER:	GENSLER
CHECKED BY:	GENSLER

Revision Schedule

Rev	Date	By	Description

SHEET TITLE:
WALL FRAMING DETAILS

SCALE: AS SHOWN

SHEET NUMBER:
A501

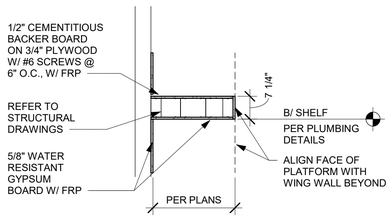

01 WATER HEATER SHELF - SECTION

Scale: 1/2" = 1'-0"

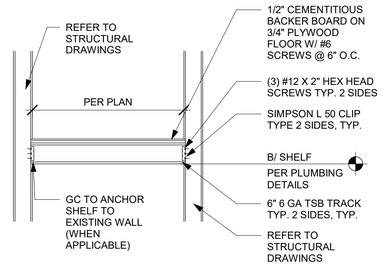

02 WATER HEATER SHELF

Scale: 1/2" = 1'-0"

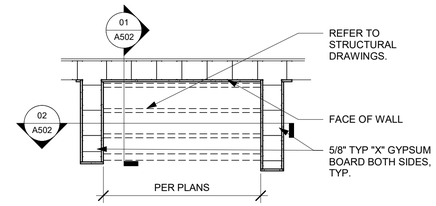

03 WATER HEATER SHELF - PLAN

Scale: 1/2" = 1'-0"

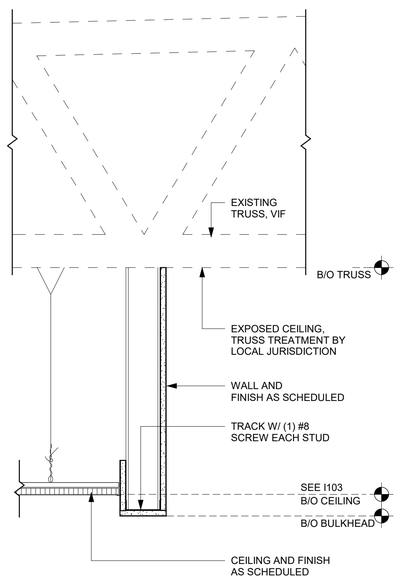

04 HEADER AT WATER HEATER

Scale: 1 1/2" = 1'-0"

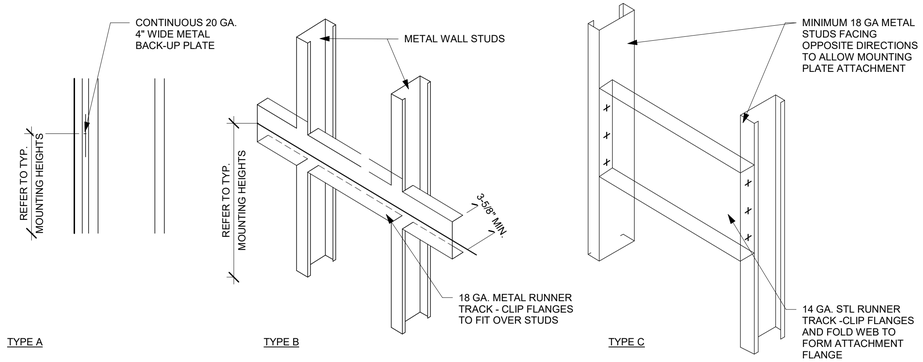

05 BLOCKING DETAIL

Scale: 1/2" = 1'-0"

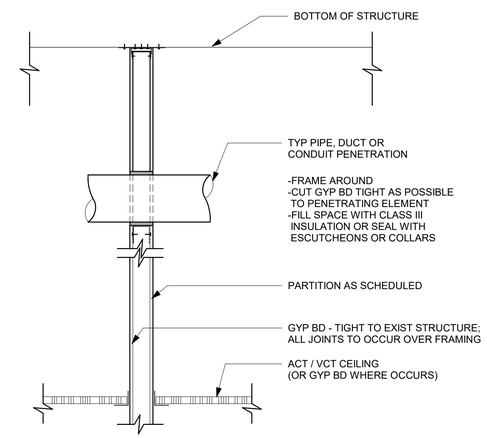

06 PIPE PENETRATION DETAIL

Scale: 3/4" = 1'-0"

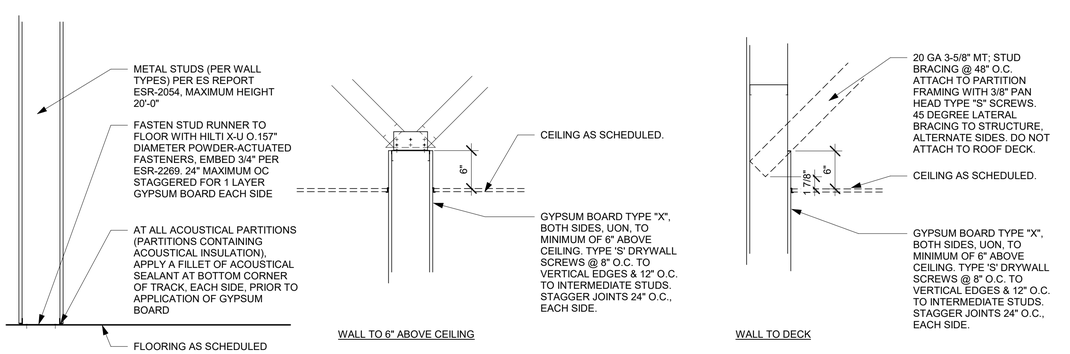

07 NEW PARTITION WALL SECTION

Scale: 1" = 1'-0"

PERMIT SET - FOR CONSTRUCTION USE

© 2022 STARBUCKS COFFEE COMPANY

STARBUCKS®
2401 UTAH AVENUE SOUTH
SEATTLE, WASHINGTON 98134
(206) 318-1575

THESE DRAWINGS AND THE PROJECT MANUAL ARE CONFIDENTIAL AND SHALL REMAIN THE SOLE PROPERTY OF STARBUCKS CORPORATION, WHICH IS THE OWNER OF THE COPYRIGHT IN THIS WORK. THEY SHALL NOT BE REPRODUCED (IN WHOLE OR IN PART), SHARED WITH THIRD PARTIES OR USED IN ANY MANNER ON OTHER PROJECTS OR EXTENSIONS TO THIS PROJECT WITHOUT THE PRIOR WRITTEN CONSENT OF STARBUCKS CORPORATION. THESE DRAWINGS AND SPECIFICATIONS ARE INTENDED TO EXPRESS DESIGN INTENT FOR A PROTOTYPICAL STARBUCKS STORE (WHICH IS SUBJECT TO CHANGE AT ANYTIME) AND DO NOT REFLECT ACTUAL SITE CONDITIONS. NEITHER PARTY SHALL HAVE ANY OBLIGATION NOR LIABILITY TO THE OTHER (EXCEPT STATED ABOVE) UNTIL A WRITTEN AGREEMENT IS FULLY EXECUTED BY BOTH PARTIES.

STARBUCKS TEMPLATE VERSION: i2023.04.24

PABLO GARCIA, AIA, REG. FL NO. AR99297

Gensler

MAIN OFFICE
M. ARTHUR GENSLER JR. & ASSOCIATES
220 MONTGOMERY STREET, SUITE 200
SAN FRANCISCO, CA 94104 USA
Tel (415) 433.3700
Fax (415) 836.4599

SATELLITE OFFICE
M. ARTHUR GENSLER JR. & ASSOCIATES
FL QUALIFIER'S LIC. NO. AR96486
545 NW 26TH ST
SUITE 250
MIAMI, FL 33127 USA
Tel (305) 350.7070
Fax (305) 350.7071

PROJECT NAME:
ST LUCIE WEST & SW CASHEMERE BLVD

PROJECT ADDRESS:
920 SW SAINT LUCIE BLVD, PORT ST.LUCIE, FL 34986

STORE #:	81616
PROJECT #:	101357-001
ISSUE DATE:	07-08-2025
DESIGN MANAGER:	ASHLEY SUEIRAS
PRODUCTION DESIGNER:	GENSLER
CHECKED BY:	GENSLER

Revision Schedule

Rev	Date	By	Description

SHEET TITLE:
WALL FRAMING DETAILS

SCALE: AS SHOWN

SHEET NUMBER:
A502

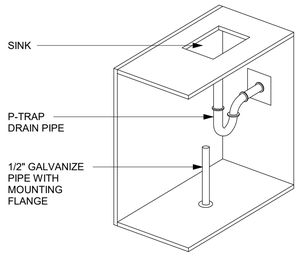

01 P-TRAP GUARD
Scale: NTS

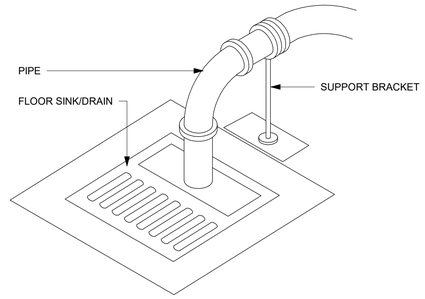

02 PIPE SUPPORT
Scale: NTS

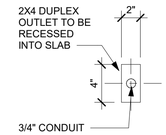

03 STUB UP AT COMMUNITY TABLE
Scale: 1 1/2" = 1'-0"

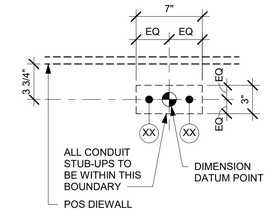

ESPRESSO BAR PLUMBING STUB-UP KEY	
1	CWF STUB-UP
2	CW STUB-UP

NOTE: SEE SHEET A102 - BUILDING FLOOR PENETRATION PLAN FOR FINAL DIMENSIONED LOCATION.

04 PLUMBING STUB-UPS AT ESPRESSO BAR
Scale: 1 1/2" = 1'-0"

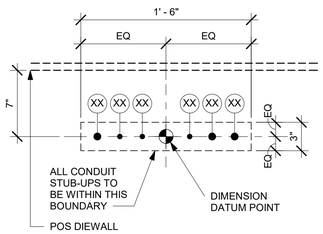

POS ELECTRICAL STUB-UP KEY	
1	3/4" POWER CONDUIT TO ELECTRICAL PANEL
2	1/2" PHONE TO MANAGER'S DESK
3	1/2" DATA CONDUIT TO MANAGER'S DESK
4	1/2" SECURITY TO MANAGER'S DESK
5	3/4" LAN CONDUIT TO POS/SAFE
6	3/4" POWER CONDUIT FOR PASTRY CASE

NOTE: SEE SHEET A102 - BUILDING FLOOR PENETRATION PLAN FOR FINAL DIMENSIONED LOCATION.

05 ELECTRICAL STUB-UPS AT POS
Scale: 1 1/2" = 1'-0"

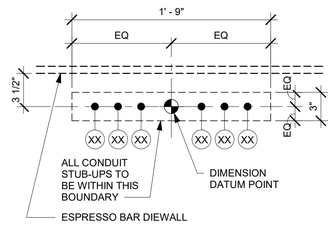

ESPRESSO BAR ELECTRICAL STUB-UP KEY	
1	3/4" LAN CONDUIT
2	3/4" LAN CONDUIT TO MANAGER'S WORKSTATION
3	3/4" ISOLATED GROUND POWER CONDUIT

NOTE: SEE SHEET A102 - BUILDING FLOOR PENETRATION PLAN FOR FINAL DIMENSIONED LOCATION.

06 ELECTRICAL STUB-UPS AT ESPRESSO BAR
Scale: 1 1/2" = 1'-0"

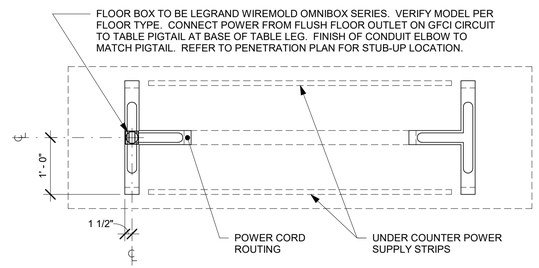

07 TABLE - ANGLED BASE COMMUNITY
Scale: 3/4" = 1'-0"

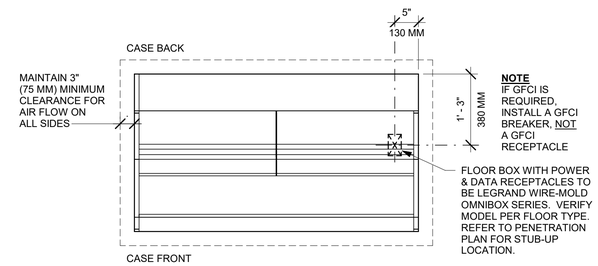

PLAN VIEW

08 SHORT CHILLED FOOD CASE ISLAND - ELECTRICAL
Scale: 3/4" = 1'-0"

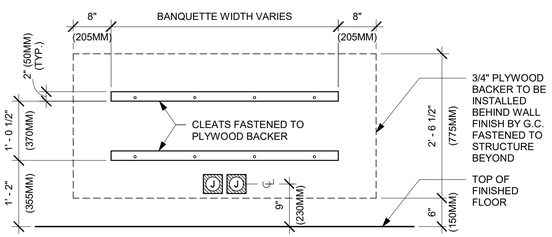

ELEVATION VIEW - BACKING

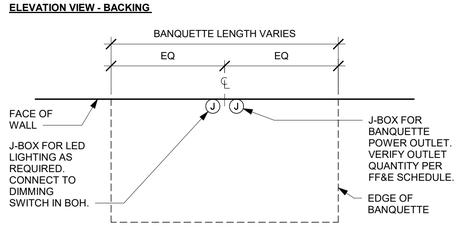

PLAN VIEW - ELECTRICAL COMPONENTS

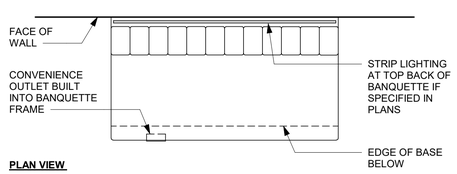

PLAN VIEW

09 BANQUETTE - CLOSTER - ELECTRICAL
Scale: 3/4" = 1'-0"

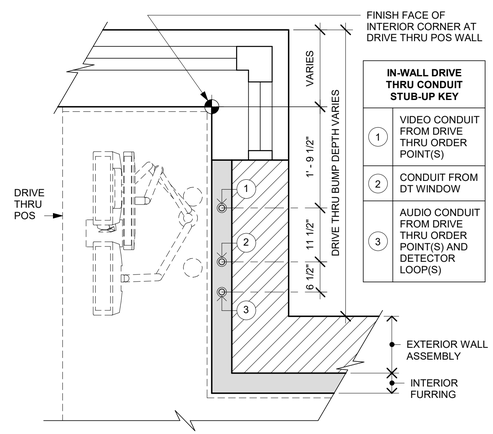

IN-WALL DRIVE THRU CONDUIT STUB-UP KEY	
1	VIDEO CONDUIT FROM DRIVE THRU ORDER POINT(S)
2	CONDUIT FROM DT WINDOW
3	AUDIO CONDUIT FROM DRIVE THRU ORDER POINT(S) AND DETECTOR LOOP(S)

10 DRIVE THRU POS IN-WALL CONDUIT STUB-UPS
Scale: 3/4" = 1'-0"

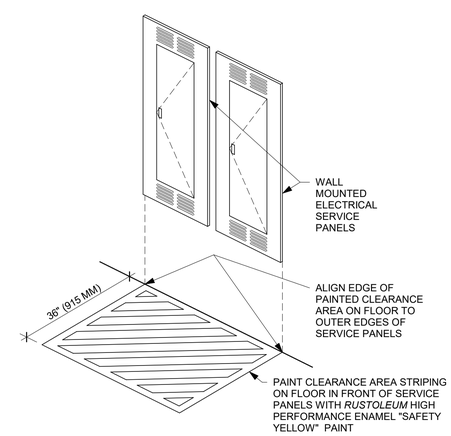

11 ELECTRICAL SERVICE PANEL FLOOR CLEARANCE
Scale: 6" = 1'-0"

PERMIT SET - FOR CONSTRUCTION USE

© 2022 STARBUCKS COFFEE COMPANY

STARBUCKS®
2401 UTAH AVENUE SOUTH
SEATTLE, WASHINGTON 98134
(206) 318-1575

THESE DRAWINGS AND THE PROJECT MANUAL ARE CONFIDENTIAL AND SHALL REMAIN THE SOLE PROPERTY OF STARBUCKS CORPORATION, WHICH IS THE OWNER OF THE COPYRIGHT IN THIS WORK. THEY SHALL NOT BE REPRODUCED (IN WHOLE OR IN PART), SHARED WITH THIRD PARTIES OR USED IN ANY MANNER ON OTHER PROJECTS OR EXTENSIONS TO THIS PROJECT WITHOUT THE PRIOR WRITTEN CONSENT OF STARBUCKS CORPORATION. THESE DRAWINGS AND SPECIFICATIONS ARE INTENDED TO EXPRESS DESIGN INTENT FOR A PROTOTYPICAL STARBUCKS STORE (WHICH IS SUBJECT TO CHANGE AT ANYTIME) AND DO NOT REFLECT ACTUAL SITE CONDITIONS. NEITHER PARTY SHALL HAVE ANY OBLIGATION NOR LIABILITY TO THE OTHER (EXCEPT STATED ABOVE) UNTIL A WRITTEN AGREEMENT IS FULLY EXECUTED BY BOTH PARTIES.

STARBUCKS TEMPLATE VERSION: i2023.04.24

PABLO GARCIA, AIA, REG. FL NO. AR99297

Gensler

MAIN OFFICE
M. ARTHUR GENSLER JR. & ASSOCIATES
220 MONTGOMERY STREET, SUITE 200
SAN FRANCISCO, CA 94104 USA
Tel (415) 433.3700
Fax (415) 836.4599

SATELLITE OFFICE
M. ARTHUR GENSLER JR. & ASSOCIATES
FL QUALIFIER'S LIC. NO. AR96486
545 NW 26TH ST
SUITE 250
MIAMI, FL 33127 USA
Tel (305) 350.7070
Fax (305) 350.7071

PROJECT NAME:
ST LUCIE WEST & SW
CASHEMERE BLVD

PROJECT ADDRESS:
920 SW SAINT LUCIE BLVD, PORT
ST.LUCIE, FL 34986

STORE #:	81616
PROJECT #:	101357-001
ISSUE DATE:	07-08-2025
DESIGN MANAGER:	ASHLEY SUEIRAS
PRODUCTION DESIGNER:	GENSLER
CHECKED BY:	GENSLER

Revision Schedule

Rev	Date	By	Description

SHEET TITLE:
BUILDING DETAILS

SCALE: AS SHOWN

SHEET NUMBER:
A503

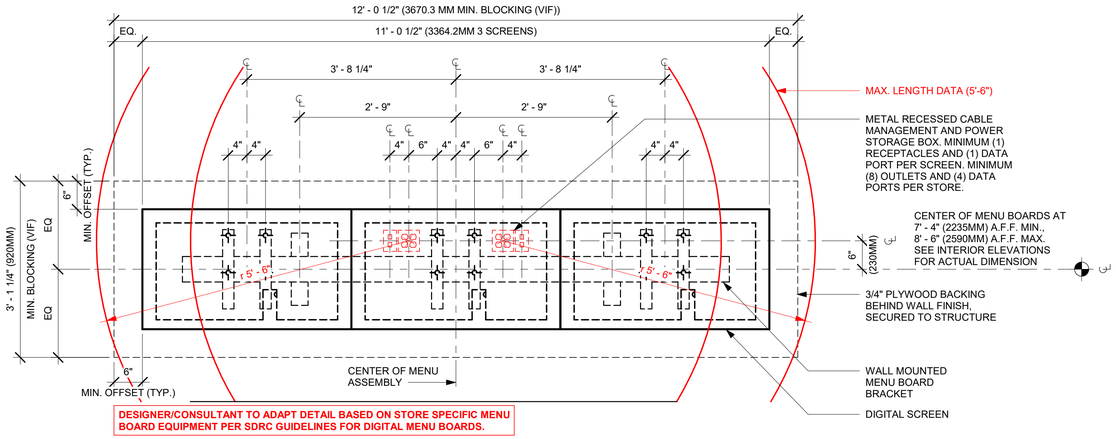

01 DIGITAL MENU BOARDS - STANDARD MOUNT

Scale: 3/4" = 1'-0"

PERMIT SET - FOR CONSTRUCTION USE

© 2022 STARBUCKS COFFEE COMPANY

STARBUCKS®
2401 UTAH AVENUE SOUTH
SEATTLE, WASHINGTON 98134
(206) 318-1575

THESE DRAWINGS AND THE PROJECT MANUAL ARE CONFIDENTIAL AND SHALL REMAIN THE SOLE PROPERTY OF STARBUCKS CORPORATION, WHICH IS THE OWNER OF THE COPYRIGHT IN THIS WORK. THEY SHALL NOT BE REPRODUCED (IN WHOLE OR IN PART), SHARED WITH THIRD PARTIES OR USED IN ANY MANNER ON OTHER PROJECTS OR EXTENSIONS TO THIS PROJECT WITHOUT THE PRIOR WRITTEN CONSENT OF STARBUCKS CORPORATION. THESE DRAWINGS AND SPECIFICATIONS ARE INTENDED TO EXPRESS DESIGN INTENT FOR A PROTOTYPICAL STARBUCKS STORE (WHICH IS SUBJECT TO CHANGE AT ANYTIME) AND DO NOT REFLECT ACTUAL SITE CONDITIONS. NEITHER PARTY SHALL HAVE ANY OBLIGATION NOR LIABILITY TO THE OTHER (EXCEPT STATED ABOVE) UNTIL A WRITTEN AGREEMENT IS FULLY EXECUTED BY BOTH PARTIES.

STARBUCKS TEMPLATE VERSION: i2023.04.24

PABLO GARCIA, AIA, REG. FL NO. AR99297

Gensler

MAIN OFFICE
M. ARTHUR GENSLER JR. & ASSOCIATES
220 MONTGOMERY STREET, SUITE 200
SAN FRANCISCO, CA 94104 USA
Tel (415) 433.3700
Fax (415) 836.4599

SATELLITE OFFICE
M. ARTHUR GENSLER JR. & ASSOCIATES
FL QUALIFIER'S LIC. NO: AR96486
545 NW 26TH ST
SUITE 250
MIAMI, FL 33127 USA
Tel (305) 350.7070
Fax (305) 350.7071

PROJECT NAME:
ST LUCIE WEST & SW
CASHEMERE BLVD

PROJECT ADDRESS:
920 SW SAINT LUCIE BLVD, PORT
ST.LUCIE, FL 34986

STORE #:	81616
PROJECT #:	101357-001
ISSUE DATE:	07-08-2025
DESIGN MANAGER:	ASHLEY SUEIRAS
PRODUCTION DESIGNER:	GENSLER
CHECKED BY:	GENSLER

Revision Schedule

Rev	Date	By	Description

SHEET TITLE:
MENU DETAILS

SCALE: AS SHOWN

SHEET NUMBER:
A504

DOOR SCHEDULE - "D"								
DESIGN ID	MARK	DESCRIPTION	WIDTH	HEIGHT	HARDWARE SET	FURN BY	INST BY	COMMENTS
Exterior								
21146	06	DOOR - SINGLE SERVICE- 36IN	3' - 2"	7' - 0"	EXIST	EXIST	EXIST	EXISTING DOOR AND HARDWARE TO REMAIN. GC TO VERIFY THEIR CONDITION AND PROPER FUNCTION.
10449	01	DOOR - STOREFRONT METAL FRAME DOUBLE - TYPE A	6' - 0"	7' - 0"	3-A-BRFR	EXIST	EXIST	EXISTING DOOR AND HARDWARE TO REMAIN. GC TO VERIFY THEIR CONDITION AND PROPER FUNCTION.
10205	02	DOOR - STOREFRONT METAL FRAME SINGLE - TYPE B	3' - 0"	6' - 11 3/4"	EXIST	EXIST	EXIST	EXISTING DOOR AND HARDWARE TO REMAIN. GC TO VERIFY THEIR CONDITION AND PROPER FUNCTION.
Interior								
10190	04	DOOR - SINGLE FLUSH - 36IN	3' - 0"	7' - 0"	7	SB	GC	FINISHES: DOOR PANEL: TO MATCH WOOD BLACK (DID: WD0035, REF. MINWAX WOOD FINISH – TRUE BLACK – 274 -SEMI-TRANSPARENT). DOOR FRAME: POWDERCOATED TO MATCH BLACK MAGIC (SW6991). KICK PLATE: MT0028
10190	05	DOOR - SINGLE FLUSH - 36IN	3' - 0"	7' - 0"	7	SB	GC	FINISHES: DOOR PANEL: TO MATCH WOOD BLACK (DID: WD0035, REF. MINWAX WOOD FINISH – TRUE BLACK – 274 -SEMI-TRANSPARENT). DOOR FRAME: POWDERCOATED TO MATCH BLACK MAGIC (SW6991). KICK PLATE: MT0028
10086	07	DOOR - SINGLE IMPACT DOUBLE ACTING - 36IN 915MM	3' - 0"	7' - 0"	11	SB	GC	HM, U, NR HM4, DOOR TYPE B. FINISHES: DOOR PANEL:MOTTLED BLACK (DID PL0019). FRAME: POWDERCOAT FLAT BLACK (DID: MT0028).

BARRIER FREE DOOR HARDWARE SCHEDULE - "D"						
DESIGN ID	COUNT	MARK	DESCRIPTION	FURN BY	INST BY	COMMENTS
23132	2	10	DOOR - BARRIER FREE HARDWARE ACTUATOR MULLION MOUNT	SB	GC	
23129	1	09	DOOR - BARRIER FREE HARDWARE KEY SWITCH	SB	GC	
23135	1	08	DOOR - BARRIER FREE HARDWARE OPERATOR - BLACK	SB	GC	

DOOR HARDWARE SET NO. 3-A-BRFR - For pair aluminum main entry/exit doors (300 or less occupancy)

No.	Item	Description	Manufacturer	Finish
2	Hanging Devices	CFM 83 HD (83 = specified door height)	Pemko	630
1	Securing Devices (active leaf)	MS1850S Deadbolt	Adams RIte	626
1	Securing Devices (inactive leaf)	MS1880 Two-Point Flushbolt	Adams Rite	626
2	Securing Devices (active leaf)	C607 7-Pin Core Combinated "A" Keyway	Falcon Lock	626
1	Securing Devices (active leaf)	KB609-2 Cut Control Key "A" Keyway	Falcon Lock	---
9	Securing Devices (active leaf)	KB632-2 Cut User Key "A" Keyway	Falcon Lock	---
2	Securing Devices (active leaf)	C987 7-Pin Mortise Cylinder Housing w/AR Cam	Falcon Lock	626
2	Securing Devices (active leaf)	A08794-003 Adjustable Ring, Mortise Cyl. 5/16-13/32	Falcon Lock	626
2	Operating Trim	Push/Pull Set BF15747	Rockwood	630
1	Closing Devices	8916 Door Closer 8916 AF89P AL	Dorma	689
2	Stops and Holders	473 Door Stop w/Hook	Rockwood	626
2	Accessories	Door Sweep 18062CNB36	Pemko	A
1	Threshold	325 Half Saddle Threshold	National Guard	---
1	Accessories	137NA Weather Strip 20' 72" x 84"	National Guard	A
1	Sign	Vinyl Sign: "THIS DOOR MUST REMAIN UNLOCKED WHEN BUILDING IS OCCUPIED"	Seton	---
REFER TO THE BARRIER-FREE EXTERIOR DOOR SCHEDULE ON THIS SHEET THAT WILL INCLUDE ADDITIONAL DOOR CONTENT FOR THIS SET				

DOOR HARDWARE SET NO. 7 - For restroom door with lever and keyed lock

No.	Item	Description	Manufacturer	Finish
3	Hanging Devices	TA2714/MPB79 Hinge MacPro Bearing 5 x 4.5	McKinney	626
1	Securing Devices	B-PB5405LNIC Lever Storeroom LC B-PB5405LN-693-497 1-3/4	Yale Lock	626
1	Securing Devices	C607 7-Pin Core Combinated "A" Keyway	Falcon Lock	626
1	Closing Devices	8916 Door Closer 8916 AF89P	Dorma	689
2	Protective Trim Units	K1050 B4E Kickplate 8" x 34" each site 32D	Rockwood	630
3	Accessories	GJ64 Rubber Silencer	Glynn Johnson	Gray
1	Stops and Holders	473 Door Stop w/ Hook 26D	Rockwood	626

DOOR HARDWARE SET NO. 11 - For workroom door at backbar

No.	Item	Description	Manufacturer	Finish
1	Traffic Door Package	SCP8 36" x 84"	Eliason	As Selected

DOOR LEGEND

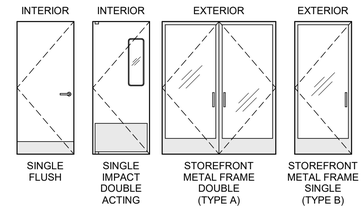

GENERAL NOTES

A. STARBUCKS VENDOR TO PROVIDE DOOR HARDWARE COMPONENTS. GC TO INSTALL.

B. SEE SHEET A101 FOR TAGGED LOCATION OF EXTERIOR DOORS AND WINDOWS.

C. EGRESS SHALL NOT PASS THROUGH KITCHENS, STORAGE ROOMS, CLOSETS OR SIMILAR SPACES. (FBCB 1016.2)

D. PANIC AND FIRE EXIT HARDWARE, WHERE INSTALLED ON DOORS IN THIS BUILDING SHALL SATISFY THE FOLLOWING (FBCB 1010.2.9):

a. THE ACTUATION PORTION OF THE RELEASING DEVICE SHALL EXTEND AT LEAST ONE-HALF OF THE DOOR LEAF WIDTH.

b. THE MAXIMUM UNLATCHING FORCE DOES NOT EXCEED 15 POUNDS (6.8 KG).

c. PIVOTED OR BALANCED DOORS SHALL BE OF THE PUSH-PAD TYPE WHERE PANIC HARDWARE IS REQUIRED AND THE PAD SHALL NOT EXTEND ACROSS MORE THAN ONE-HALF OF THE DOOR WIDTH, MEASURED FROM THE LATCH SIDE.

d. PANIC HARDWARE LISTED IN ACCORDANCE WITH UL 305.

e. FIRE EXIT HARDWARE LISTED IN ACCORDANCE WITH UL 10C AND UL 305.

E. SPY SCOPE HARDWARE, WHERE INSTALLED SHALL BE CENTERED IN DOOR AT 54" (1370MM) A.F.F.

F. FOR BARRIER FREE DOOR HARDWARE INSTALLATION AND TECHNICAL SUPPORT, CONTACT THE STARBUCKS SUPPLIER, LOCKNET, AT SBUXTEAM@LOCKNET.COM.

G. PROVIDE SAFETY GLASS IN LOCATIONS AS REQUIRED BY FBCB SECTION 2406.

H. ALL DOORS TO HAVE BOTTOM CLEARENCE OF 1/4" BETWEEN THRESHOLD AND DOOR BOTTON. UNO.

I. INSTALL OCCUPANCY INDICATOR HARDWARE ON RESTROOM DOORS. REVIEW REQUIREMENTS FOR INDICATOR W/ STARBUCKS PROJECT MANAGER PRIOR TO CONSTRUCTION.

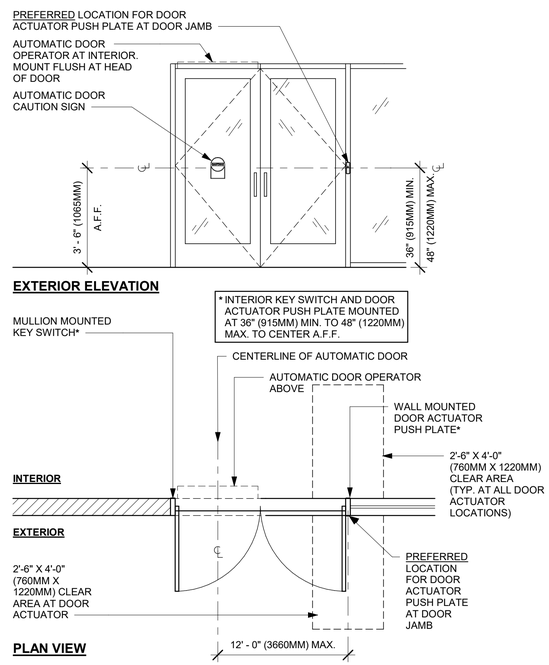

01 ENTRY/EXIT DOOR ACTUATION - BOLLARD
Scale: 3/8" = 1'-0"

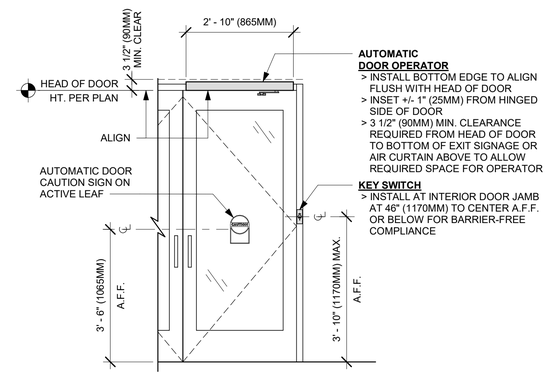

02 ENTRY/EXIT DOOR ACTUATION - KEY SWITCH AND OPERATOR
Scale: 1/2" = 1'-0"

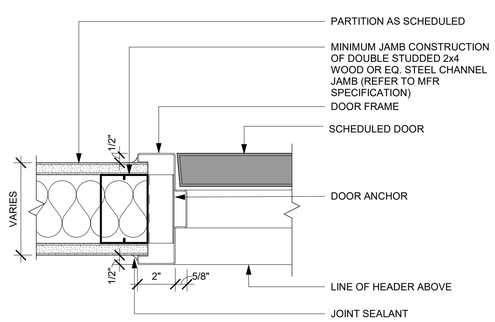

04 SINGLE FLUSH DOOR - FRAME JAMB
Scale: 3" = 1'-0"

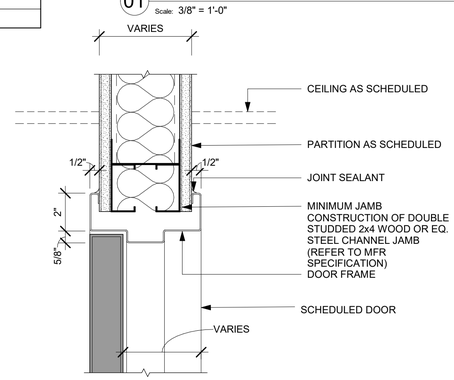

05 SINGLE FLUSH DOOR - FRAME HEAD
Scale: 3" = 1'-0"

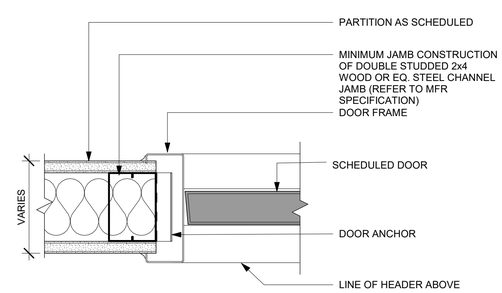

06 DOUBLE ACTION DOOR - FRAME JAMB
Scale: 3" = 1'-0"

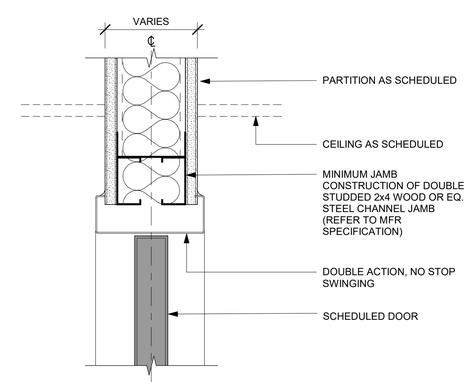

07 DOUBLE ACTION DOOR - FRAME HEAD
Scale: 3" = 1'-0"

PERMIT SET - FOR CONSTRUCTION USE

© 2022 STARBUCKS COFFEE COMPANY

STARBUCKS®
2401 UTAH AVENUE SOUTH
SEATTLE, WASHINGTON 98134
(206) 318-1575

THESE DRAWINGS AND THE PROJECT MANUAL ARE CONFIDENTIAL AND SHALL REMAIN THE SOLE PROPERTY OF STARBUCKS CORPORATION, WHICH IS THE OWNER OF THE COPYRIGHT IN THIS WORK. THEY SHALL NOT BE REPRODUCED (IN WHOLE OR IN PART), SHARED WITH THIRD PARTIES OR USED IN ANY MANNER ON OTHER PROJECTS OR EXTENSIONS TO THIS PROJECT WITHOUT THE PRIOR WRITTEN CONSENT OF STARBUCKS CORPORATION. THESE DRAWINGS AND SPECIFICATIONS ARE INTENDED TO EXPRESS DESIGN INTENT FOR A PROTOTYPICAL STARBUCKS STORE (WHICH IS SUBJECT TO CHANGE AT ANYTIME) AND DO NOT REFLECT ACTUAL SITE CONDITIONS. NEITHER PARTY SHALL HAVE ANY OBLIGATION NOR LIABILITY TO THE OTHER (EXCEPT STATED ABOVE) UNTIL A WRITTEN AGREEMENT IS FULLY EXECUTED BY BOTH PARTIES.

STARBUCKS TEMPLATE VERSION: i2023.04.24

PABLO GARCIA, AIA, REG. FL NO. AR99297

Gensler
MAIN OFFICE
M. ARTHUR GENSLER JR. & ASSOCIATES
220 MONTGOMERY STREET, SUITE 200
SAN FRANCISCO, CA 94104 USA
Tel (415) 433.3700
Fax (415) 836.4599

SATELLITE OFFICE
M. ARTHUR GENSLER JR. & ASSOCIATES
FL QUALIFIER'S LIC. NO. AR96486
545 NW 26TH ST
SUITE 250
MIAMI, FL 33127 USA
Tel (305) 350.7070
Fax (305) 350.7071

PROJECT NAME:
ST LUCIE WEST & SW CASHEMERE BLVD

PROJECT ADDRESS:
920 SW SAINT LUCIE BLVD, PORT ST.LUCIE, FL 34986

STORE #:	81616
PROJECT #:	101357-001
ISSUE DATE:	07-08-2025
DESIGN MANAGER:	ASHLEY SUEIRAS
PRODUCTION DESIGNER:	GENSLER
CHECKED BY:	GENSLER

Revision Schedule

Rev	Date	By	Description

SHEET TITLE:
WINDOW AND DOOR SCHEDULES & DETAILS
SCALE: AS SHOWN

SHEET NUMBER:
A602

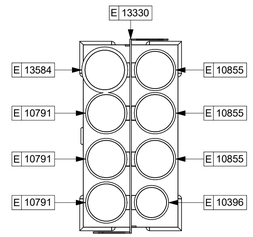

03 ENLARGED CUP CUBBY
Scale: 1 1/2" = 1'-0"

LEGEND

- ITEM/EQUIPMENT FOR FUTURE
- EXISTING ITEM/EQUIPMENT TO REMAIN
- ADJACENT TENANT

NOTE: LEGEND IS DEPENDENT ON COLORS USED FOR COMPLETE SCOPE INFORMATION.

KEYED NOTES

01 INSTALL EXTERIOR FURNITURE THROUGHOUT AS SHOWN. REFER TO FURNITURE SCHEDULE FOR ADDITIONAL INFORMATION.
02 INSTALL INTERIOR CAFE FURNITURE THROUGHOUT AS SHOWN. REFER TO FURNITURE SCHEDULE FOR ADDITIONAL INFORMATION.
03 COMMUNITY BOARD. SEE INTERIOR FINISH ELEVATIONS.
04 WASTE AND RECYCLE STATION. SEE INTERIOR FINISH ELEVATIONS.
05 DO NOT CAULK TRASH RINGS TO COUNTERTOP.
06 MERCHANDISE DISPLAY. SEE DETAILS I502 FOR MORE INFORMATION.
07 DO NOT BLOCK FOOD CASE INTAKE/EXHAUST.
08 SAFE LOCATED AT POS CABINET. SEE ELECTRICAL FOR ADDITIONAL INFORMATION.
09 HAND SINK W/ INTEGRAL SPLASH GUARD.
10 INSTALL CORNER GUARD AS INDICATED. SEE INTERIOR FINISH ELEVATIONS.
12 PLACE FIRE EXTINGUISHER IN WORKROOM PER FIRE INSPECTOR.
13 SECURE LOCKERS TO WALL.
14 G.C. TO REVERSE HINGE ON U.C. REFRIGERATOR TO LEFT HAND SWING AS SHOWN.
15 MANAGERS DESK. SEE MANAGER'S DESK / EQUIPMENT RACK ELECTRICAL DETAIL FOR ADDITIONAL INFORMATION.
16 REFER TO ENLARGED RESTROOM PLANS AND ELEVATIONS (SHEET I401) FOR FIXTURE LOCATIONS AND MOUNTING HEIGHTS.
18 ELECTRICAL PANEL LOCATIONS. MAINTAIN MINIMUM CLEARANCE AS REQUIRED BY CODE.

GENERAL NOTES

A. GENERAL CONTRACTOR TO SCHEDULE WITH LOCAL REFRIGERATION CONTRACTOR TO CONDUCT INITIAL FOOD CASE START-UP AND TESTING. FOR LIST OF APPROVED START UP CONTRACTORS, CONTACT PROJECT CONSTRUCTION REPRESENTATIVE.

B. THE SITE IS SERVED BY THE MUNICIPAL WATER AND SEWER SYSTEM UNLESS OTHERWISE NOTED.

C. ALL FOOD STORAGE SHALL BE 6" (150mm) A.F.F.

D. ALL WOOD SURFACES (DOORS, TRIM, SHELVES, CABINETS) SHALL BE SEALED.

E. ALL EQUIPMENT AND INSTALLATION WILL MEET NATIONAL SANITATION FOUNDATION STANDARDS OR EQUIVALENT.

F. ALL EQUIPMENT AND CABINETRY WILL BE FLUSH MOUNTED TO COUNTERS, WALLS OR FLOORS, OR BE RAISED TO ALLOW FOR CLEANING.

G. CONFIRM ALL NECESSARY EQUIPMENT CLEARANCES PER PRODUCT CUT SHEET (E.G. ICE MACHINE).

H. FOR LOCATION OF COUNTERTOP EQUIPMENT, REFER TO CASEWORK ELECTRICAL DETAILS.

I. EQUIPMENT UNITS SHALL CONTAIN NO EXPOSED THREADS, EMBELLISHMENTS OR OVERHANGING EDGES THAT SERVE AS PLACES FOR ACCUMULATION OF DUST, DIRT AND DEBRIS.

J. WARMING OVEN(S) SHOWN FOR PERMITTING PURPOSES. INSTALLATION AT STORE OPENING TO BE VERIFIED BY STARBUCKS CONSTRUCTION REPRESENTATIVE.

K. EACH HAND WASHING SINK WILL HAVE A SINGLE SERVICE TOWEL AND SOAP DISPENSER, AND ALL HAND SINKS TO HAVE A COMBINATION FAUCET OR PREMIXING FAUCET.

L. FOR PLUMBING FIXTURES, REFER TO THE PLUMBING DESIGN PLAN. FOR DATA DEVICE SCHEDULE, REFER TO THE ELECTRICAL DESIGN PLAN.

M. SEE ELEVATIONS FOR DISTRIBUTION OF CUP DISPENSERS.

N. PROVIDE FIRE EXTINGUISHERS AS NOTED ON THE APPROVED PLANS FROM THE LOCAL JURISDICTION.

NOTE :
REFER SHEET I601 & I602 FOR DATA DEVICE, FURNITURE, GRAPHICS, PLUMBING FIXTURE, SPECIALTY EQUIPMENT, AND MECHANICAL EQUIPMENT SCHEDULE.

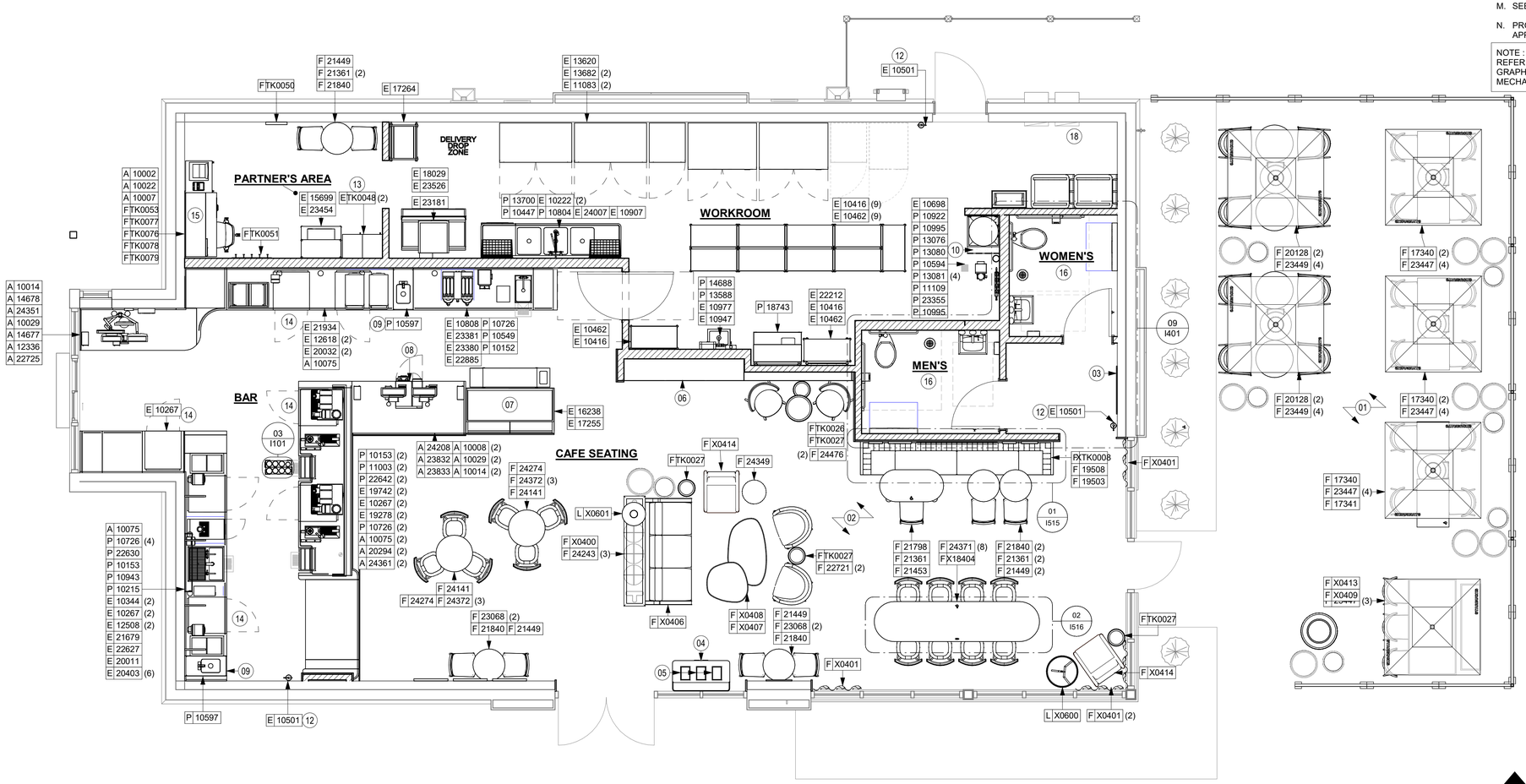

01 FURNITURE, FIXTURES AND EQUIPMENT PLAN
Scale: 1/4" = 1'-0"

PERMIT SET - FOR CONSTRUCTION USE

© 2022 STARBUCKS COFFEE COMPANY

STARBUCKS®
2401 UTAH AVENUE SOUTH
SEATTLE, WASHINGTON 98134
(206) 318-1575

THESE DRAWINGS AND THE PROJECT MANUAL ARE CONFIDENTIAL AND SHALL REMAIN THE SOLE PROPERTY OF STARBUCKS CORPORATION, WHICH IS THE OWNER OF THE COPYRIGHT IN THIS WORK. THEY SHALL NOT BE REPRODUCED (IN WHOLE OR IN PART), SHARED WITH THIRD PARTIES OR USED IN ANY MANNER ON OTHER PROJECTS OR EXTENSIONS TO THIS PROJECT WITHOUT THE PRIOR WRITTEN CONSENT OF STARBUCKS CORPORATION. THESE DRAWINGS AND SPECIFICATIONS ARE INTENDED TO EXPRESS DESIGN INTENT FOR A PROTOTYPICAL STARBUCKS STORE (WHICH IS SUBJECT TO CHANGE AT ANYTIME) AND DO NOT REFLECT ACTUAL SITE CONDITIONS. NEITHER PARTY SHALL HAVE ANY OBLIGATION NOR LIABILITY TO THE OTHER (EXCEPT STATED ABOVE) UNTIL A WRITTEN AGREEMENT IS FULLY EXECUTED BY BOTH PARTIES.

STARBUCKS TEMPLATE VERSION: i2023.04.24

PABLO GARCIA, AIA, REG. FL NO. AR99297

Gensler
MAIN OFFICE
M. ARTHUR GENSLER JR. & ASSOCIATES
220 MONTGOMERY STREET, SUITE 200
SAN FRANCISCO, CA 94104 USA
Tel (415) 433.3700
Fax (415) 836.4599

SATELLITE OFFICE
M. ARTHUR GENSLER JR. & ASSOCIATES
FL QUALIFIER'S LIC. NO. AR96486
545 NW 26TH ST
SUITE 250
MIAMI, FL 33127 USA
Tel (305) 350.7070
Fax (305) 350.7071

PROJECT NAME:
ST LUCIE WEST & SW CASHEMERE BLVD

PROJECT ADDRESS:
920 SW SAINT LUCIE BLVD, PORT ST.LUCIE, FL 34986

STORE #:	81616
PROJECT #:	101357-001
ISSUE DATE:	07-08-2025
DESIGN MANAGER:	ASHLEY SUEIRAS
PRODUCTION DESIGNER:	GENSLER
CHECKED BY:	GENSLER

Revision Schedule

Rev	Date	By	Description

SHEET TITLE:
FF & E PLAN

SCALE: AS SHOWN

SHEET NUMBER:
I101

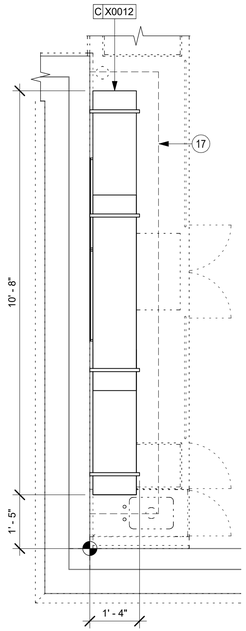

02 CBE UPPER PLAN
Scale: 1/2" = 1'-0"

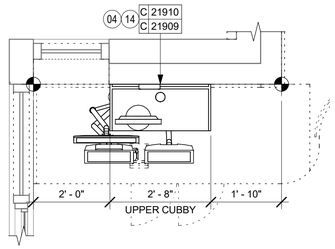

03 DT POS CUBBY UPPER PLAN
Scale: 1/2" = 1'-0"

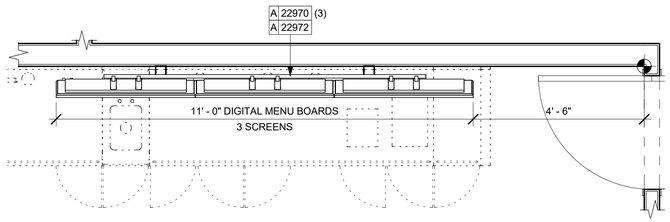

04 MENU BOARDS UPPER PLAN
Scale: 1/2" = 1'-0"

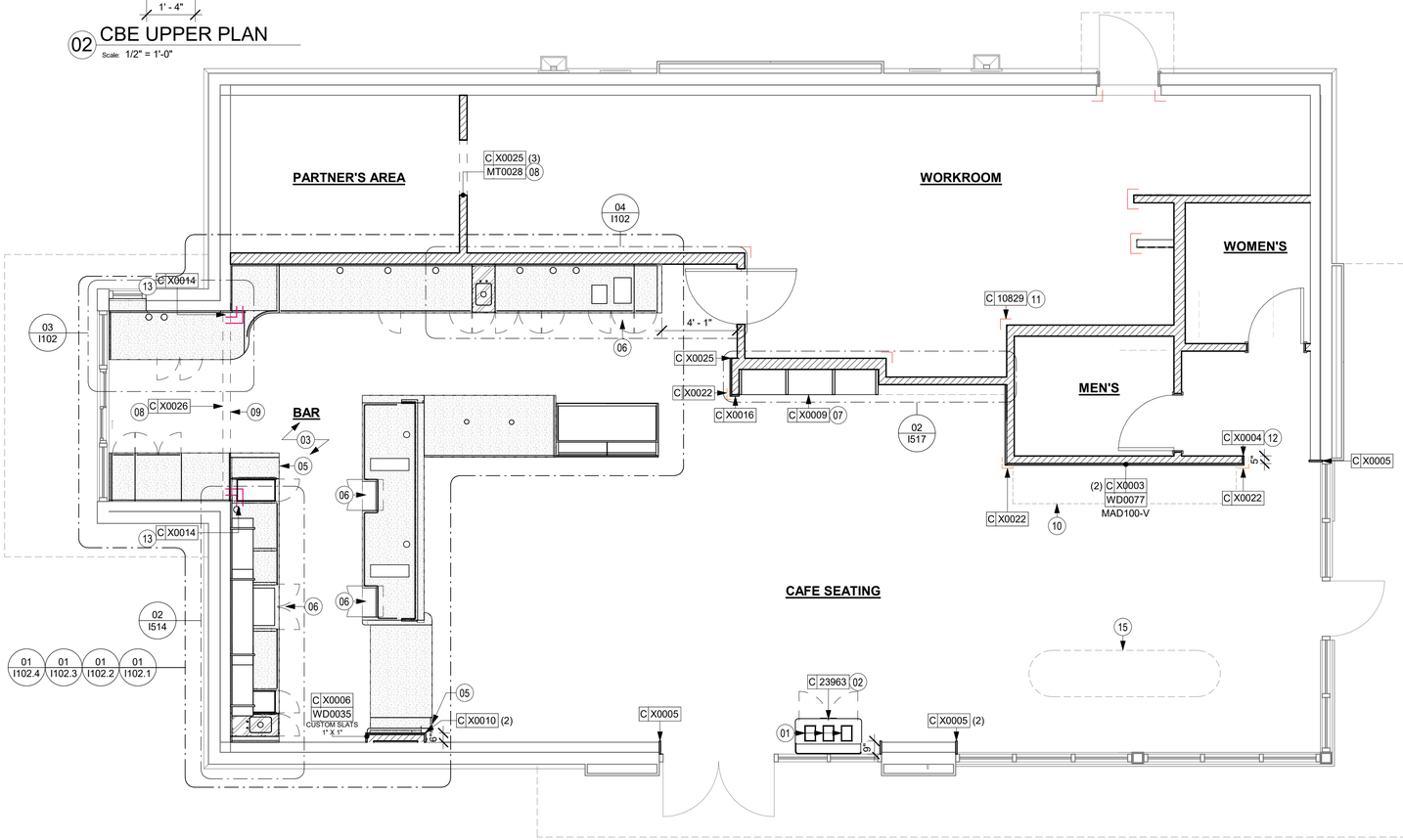

01 CASEWORK PLAN
Scale: 1/4" = 1'-0"

KEYED NOTES

01 DO NOT CAULK TRASH RINGS TO COUNTERTOPS.
02 INSTALL CONDIMENT CART AS INDICATED.
03 WALL FINISH BEHIND EXPOSED CABINETRY AND BELOW UNDERSIDE OF COUNTERTOP SUBSTRATE TO BE POLYWALL, EXCEPT AT WARMING WALL.
04 INSTALL DRIVE-THRU POS CUBBY TO ALIGN WITH FINISH FACE OF WALL.
05 VARIABLE WIDTH FILLER PANEL / COUNTERTOP REQUIRED TO FILL GAP (FIELD VERIFY DIMENSION). FILLER PANEL AND COUNTERTOP SHALL BE SCRIBED AND FIELD CUT TO FIT.
06 FLOOR DRAIN BELOW. CASEWORK MANUFACTURER TO COORDINATE DESIGN TO ENSURE THIS AREA IS READILY ACCESSIBLE FOR CLEANING AND FREE OF COUNTERTOP SUPPORT.
07 INSTALL MERCH UNIT AS INDICATED.
08 INSTALL METAL TRIM TRANSITION AS INDICATED.
09 OUTLINE OF HEADER ABOVE FOR REFERENCE.
10 BANQUETTE OUTLINE FOR REFERENCE.
11 INSTALL CORNER GUARD AT OUTSIDE CORNER AS INDICATED. REFER TO DETAIL.
12 INSTALL WOOD TRIM VESTIBULE OPENING A INDICATED.
13 INSTALL SCHLUTER PROFILE AS SPECIFIED IN THE SCHEDULE AT THE CORNER OF THE TILE.
14 INSTALL UPPER CABINETS W/ EQUIPMENT. GC TO COORD. INSTALL & CABLING WITH SB VENDOR.
15 COMMUNITY TABLE OUTLINE FOR REFERENCE.
17 CEILING BLOCKING FOR UPPER SHELF.

GENERAL NOTES

A. GENERAL CONTRACTOR TO NOTIFY CONSTRUCTION MANAGER IMMEDIATELY IF A DISCREPANCY EXISTS BETWEEN CASEWORK SHOP DRAWINGS, EXISTING SITE CONDITIONS, ARCHITECTURAL DRAWINGS OR BUILT FIXTURES. ALL DIMENSIONS SHALL BE FIELD VERIFIED BY G.C.

B. STARBUCKS CONSTRUCTION MANAGER TO COORDINATE AND SCHEDULE CASEWORK DELIVERY DATE. GENERAL CONTRACTOR TO CONFIRM CASEWORK DELIVERY DATE WITH CASEWORK MANUFACTURER AT FOUR (4) WEEKS PRIOR AND THEN ONE (1) WEEK PRIOR TO SCHEDULED DATE OF DELIVERY.

C. STARBUCKS CONTRACTS DIRECTLY WITH CASEWORK VENDOR TO SUPPLY CASEWORK LISTED IN THE CASEWORK SCHEDULE, UNLESS OTHERWISE NOTED.

D. CASEWORK VENDOR TO PROVIDE COMPLETE SHOP DRAWINGS AND INSTALLATION PACKAGE TO GENERAL CONTRACTOR TO FACILITATE PROPER INSTALLATION.

E. ALL CASEWORK BOX BASES SHALL BE SET AND LEVELED USING 1/4" (6 MM) NON-ABSORBENT PLASTIC SHIMS PROVIDED BY CASEWORK VENDOR.

F. SEE INTERIOR FINISH ELEVATIONS AND SCHEDULES FOR LOCATION AND TAGGING OF WALL TREATMENTS BY CV AND OTHERS.

G. SEE REFLECTED CEILING PLAN FOR ABOVE BAR SOFFIT LOCATIONS.

H. REFERENCE PLUMBING AND ELECTRICAL PLANS FOR PLACEMENT OF ELECTRICAL, DATA AND PLUMBING ON FRONT AND BACKLINE OF BAR.

LEGEND

INDICATES STAINLESS STEEL (SST) COUNTERTOP

INDICATES SOLID SURFACE (SS) COUNTERTOP

DATUM POINT

INDICATES CORNER GUARD FOR BOH. INSTALL 6" (150MM) TO 42" (1065MM) A.F.F. UNLESS OTHERWISE NOTED. — C 10829

INDICATES CORNER GUARD. FULL HEIGHT. — C X0021

INDICATES FRY REGLET Y TRIM (1/4" POST OUTSIDE CORNER) FOR WOOD CLADDING — C X0022

INDICATES SCHLUTER FINEC-SQ TRIM 3/16", FINISH: MATTE BLACK TEXTURED COLOR-COATED ALUMINUM. — C X0023

PERMIT SET - FOR CONSTRUCTION USE

© 2022 STARBUCKS COFFEE COMPANY

STARBUCKS®
2401 UTAH AVENUE SOUTH
SEATTLE, WASHINGTON 98134
(206) 318-1575

THESE DRAWINGS AND THE PROJECT MANUAL ARE CONFIDENTIAL AND SHALL REMAIN THE SOLE PROPERTY OF STARBUCKS CORPORATION, WHICH IS THE OWNER OF THE COPYRIGHT IN THIS WORK. THEY SHALL NOT BE REPRODUCED (IN WHOLE OR IN PART), SHARED WITH THIRD PARTIES OR USED IN ANY MANNER ON OTHER PROJECTS OR EXTENSIONS TO THIS PROJECT WITHOUT THE PRIOR WRITTEN CONSENT OF STARBUCKS CORPORATION. THESE DRAWINGS AND SPECIFICATIONS ARE INTENDED TO EXPRESS DESIGN INTENT FOR A PROTOTYPICAL STARBUCKS STORE (WHICH IS SUBJECT TO CHANGE AT ANYTIME) AND DO NOT REFLECT ACTUAL SITE CONDITIONS. NEITHER PARTY SHALL HAVE ANY OBLIGATION NOR LIABILITY TO THE OTHER (EXCEPT STATED ABOVE) UNTIL A WRITTEN AGREEMENT IS FULLY EXECUTED BY BOTH PARTIES.

STARBUCKS TEMPLATE VERSION: i2023.04.24

PABLO GARCIA, AIA, REG. FL NO. AR99297

Gensler
MAIN OFFICE
M. ARTHUR GENSLER JR. & ASSOCIATES
220 MONTGOMERY STREET, SUITE 200
SAN FRANCISCO, CA 94104 USA
Tel (415) 433.3700
Fax (415) 836.4599

SATELLITE OFFICE
M. ARTHUR GENSLER JR. & ASSOCIATES
FL QUALIFIER'S LIC. NO. AR96486
545 NW 26TH ST
SUITE 250
MIAMI, FL 33127 USA
Tel (305) 350.7070
Fax (305) 350.7071

PROJECT NAME:
ST LUCIE WEST & SW
CASHEMERE BLVD

PROJECT ADDRESS:
920 SW SAINT LUCIE BLVD, PORT
ST.LUCIE, FL 34986

STORE #:	81616
PROJECT #:	101357-001
ISSUE DATE:	07-08-2025
DESIGN MANAGER:	ASHLEY SUEIRAS
PRODUCTION DESIGNER:	GENSLER
CHECKED BY:	GENSLER

Revision Schedule

Rev	Date	By	Description

SHEET TITLE:
CASEWORK PLAN

SCALE: AS SHOWN

SHEET NUMBER:
I102

ADAPTABLE CASEWORK SUPPORT LEG AND DIEWALL BASE SCHEDULE "C"

DESIGN ID	COUNT	DESCRIPTION	FURN. BY	INST. BY	COMMENTS
DIEWALL					
21886	2	DIEWALL - BASE - VARIABLE LENGTH	SB	GC	
21888	47	DIEWALL - SUPPORT LEG	SB	GC	
24547	4	DIEWALL - VARIABLE LENGTH	SB	GC	

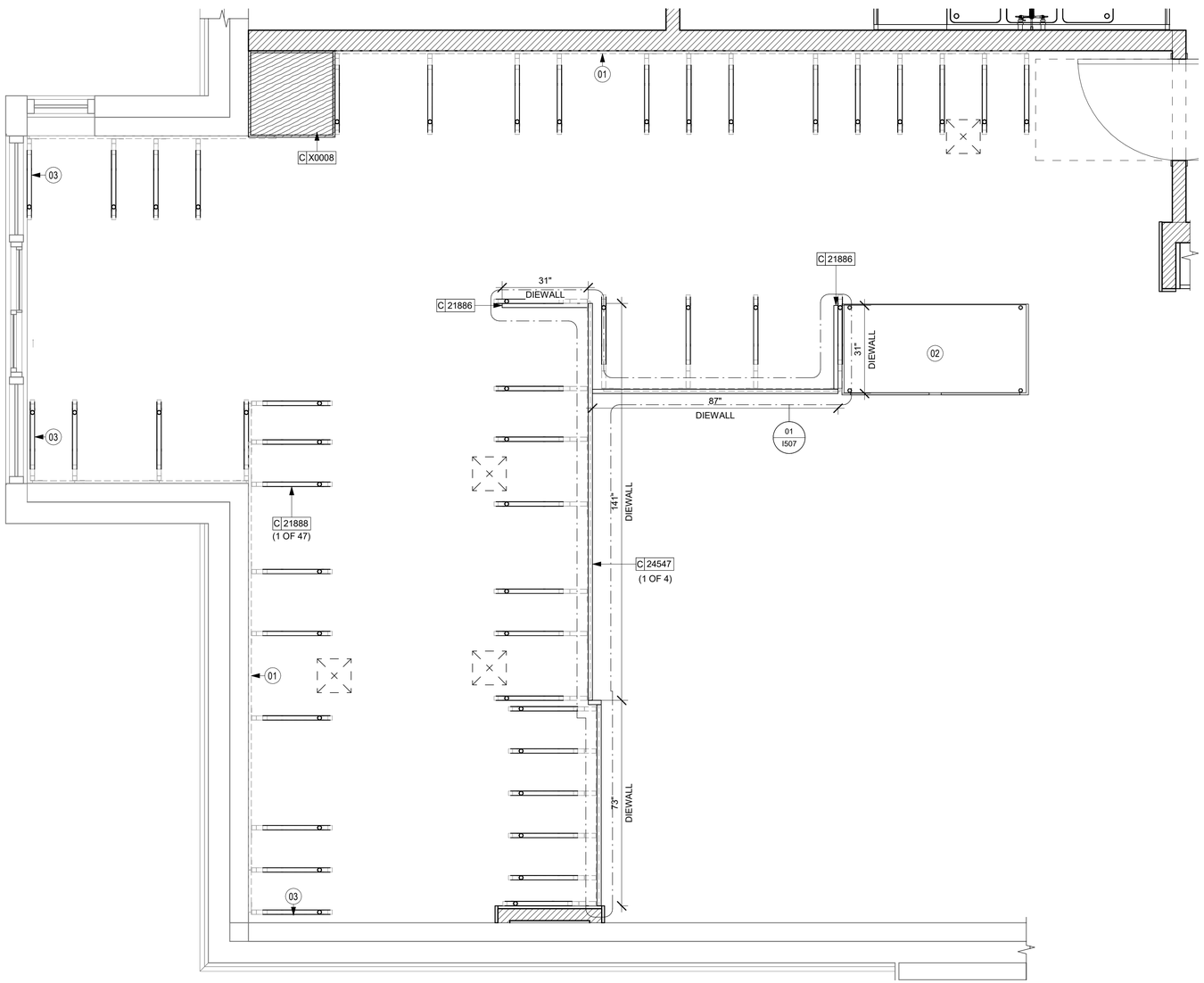

01 ADAPTABLE CASEWORK BASE PLAN
Scale: 1/2" = 1'-0"

KEYED NOTES

01 CASEWORK FRAMEWORK ABOVE.
02 FOOD CASE BASE.
03 CASEWORK SUPPORT ADJACENT TO WALL TO SIT ON STEEL ANGLE FASTENED TO WALL.

GENERAL NOTES

A. SEE SHEET I102 FOR COMPLETE CASEWORK SCHEDULE.

B. METAL COMPONENTS PROVIDED BY CASEWORK SUPPLIER UNLESS OTHERWISE NOTED.

C. DIEWALL AND BOX BASES TO BE INSTALLED PRIOR TO FLOORING MATERIAL INSTALLATION.

D. G.C. TO INSTALL BLOCKING BETWEEN DIEWALL BASE.

E. ALL DIMENSIONS TAKEN FROM FRONTLINE DATUM POINT TO OUTSIDE CORNER OF DIEWALL BASE.

F. BOX BASE (IF APPLICABLE) BUTTS UP AGAINST INSIDE FACE OF DIEWALL. PROVIDE SEALANT AT SEAM.

G. LEVEL BOX BASES TO BOTTOM RAIL OF WALL FRAME.

LEGEND

VARIABLE LENGTH BOX BASE

CABINET LEG

DATUM POINT

N

PERMIT SET - FOR CONSTRUCTION USE

© 2022 STARBUCKS COFFEE COMPANY

STARBUCKS®
2401 UTAH AVENUE SOUTH
SEATTLE, WASHINGTON 98134
(206) 318-1575

THESE DRAWINGS AND THE PROJECT MANUAL ARE CONFIDENTIAL AND SHALL REMAIN THE SOLE PROPERTY OF STARBUCKS CORPORATION, WHICH IS THE OWNER OF THE COPYRIGHT IN THIS WORK. THEY SHALL NOT BE REPRODUCED (IN WHOLE OR IN PART), SHARED WITH THIRD PARTIES OR USED IN ANY MANNER ON OTHER PROJECTS OR EXTENSIONS TO THIS PROJECT WITHOUT THE PRIOR WRITTEN CONSENT OF STARBUCKS CORPORATION. THESE DRAWINGS AND SPECIFICATIONS ARE INTENDED TO EXPRESS DESIGN INTENT FOR A PROTOTYPICAL STARBUCKS STORE (WHICH IS SUBJECT TO CHANGE AT ANYTIME) AND DO NOT REFLECT ACTUAL SITE CONDITIONS. NEITHER PARTY SHALL HAVE ANY OBLIGATION NOR LIABILITY TO THE OTHER (EXCEPT STATED ABOVE) UNTIL A WRITTEN AGREEMENT IS FULLY EXECUTED BY BOTH PARTIES.

STARBUCKS TEMPLATE VERSION: i2023.04.24

PABLO GARCIA, AIA, REG. FL NO. AR99297

Gensler

MAIN OFFICE
M. ARTHUR GENSLER JR. & ASSOCIATES
220 MONTGOMERY STREET, SUITE 200
SAN FRANCISCO, CA 94104 USA
Tel (415) 433.3700
Fax (415) 836.4599

SATELLITE OFFICE
M. ARTHUR GENSLER JR. & ASSOCIATES
FL QUALIFIER'S LIC. NO: AR96486
545 NW 26TH ST
SUITE 250
MIAMI, FL 33127 USA
Tel (305) 350.7070
Fax (305) 350.7071

PROJECT NAME:
ST LUCIE WEST & SW CASHEMERE BLVD

PROJECT ADDRESS:
920 SW SAINT LUCIE BLVD, PORT ST.LUCIE, FL 34986

STORE #:	81616
PROJECT #:	101357-001
ISSUE DATE:	07-08-2025
DESIGN MANAGER:	ASHLEY SUEIRAS
PRODUCTION DESIGNER:	GENSLER
CHECKED BY:	GENSLER

Revision Schedule

Rev	Date	By	Description

SHEET TITLE:
ADAPTABLE CASEWORK BASE PLAN
SCALE: AS SHOWN

SHEET NUMBER:
I102.1

ADAPTABLE CASEWORK FRAMEWORK SCHEDULE - "C"					
DESIGN ID	COUNT	DESCRIPTION	FURN. BY	INST. BY	COMMENTS
DIEWALL					
21888	47	DIEWALL - SUPPORT LEG	SB	GC	
24516	14	DIEWALL - FRAMING - VARIABLE LENGTH	SB	GC	
24547	4	DIEWALL - VARIABLE LENGTH	SB	GC	

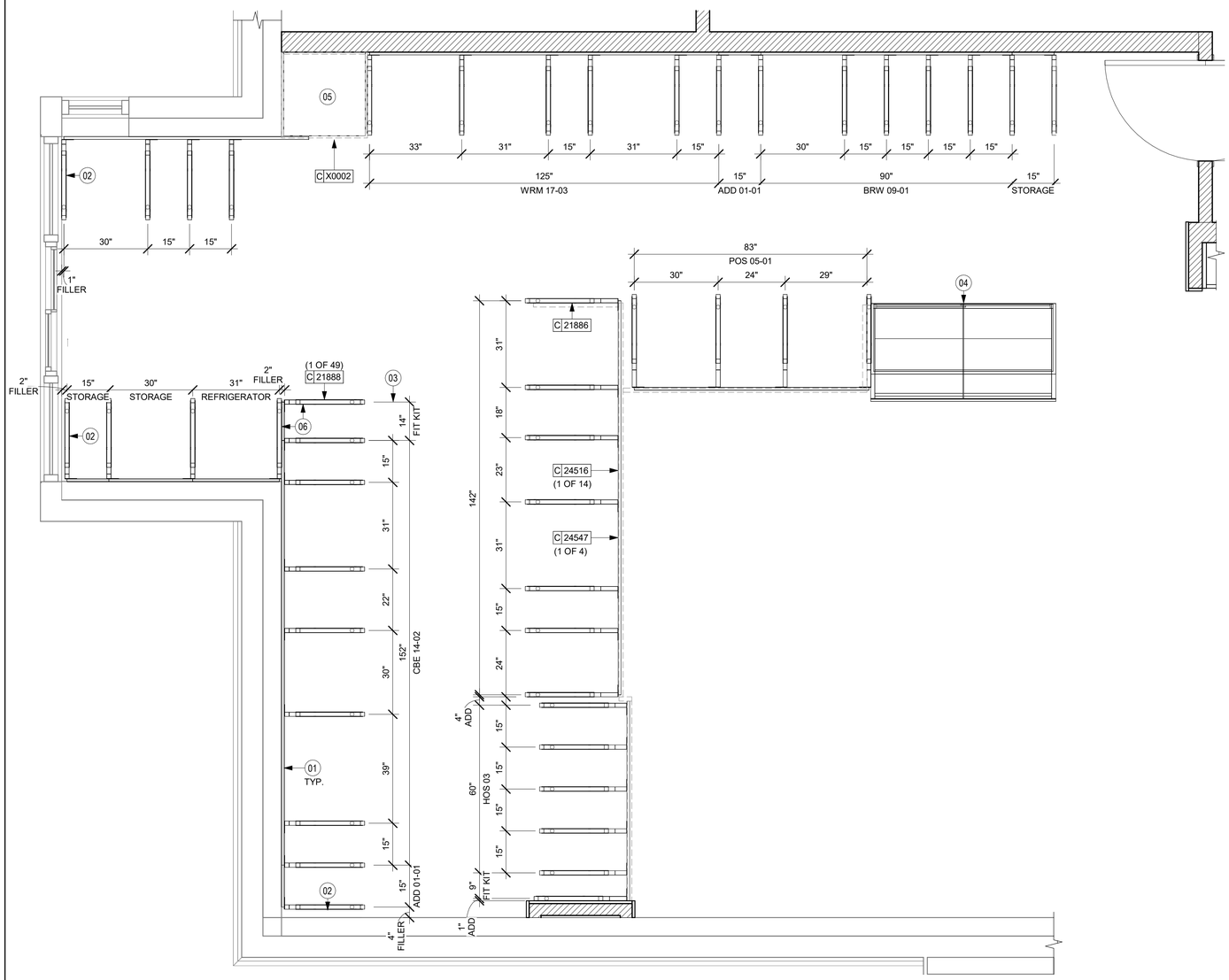

01 ADAPTABLE CASEWORK FRAMEWORK PLAN

Scale: 1/2" = 1'-0"

N

KEYED NOTES

01 PROVIDE 3/4" BLOCKING TO 34" A.F.F. FOR ALL WALL BRACKETS TO SUPPORT CASEWORK LEG.

02 METAL SUPPORT LEG ADJACENT TO WALL TO BE SUPPORTED BY METAL ANGLE FASTENED TO WALL PER CONSTRUCTION DETAILS.

03 DIMENSIONS LOCATING SUPPORT LEG ARE TO CENTER OF FRAME.

04 FOOD CASE.

05 CUSTOM CORNER. FABRICATE USING TRADITIONAL CASEWORK CONSTRUCTION.

06 ALIGN FRAMEWORK.

GENERAL NOTES

A. SEE SHEET I102 FOR COMPLETE CASEWORK SCHEDULE.

B. METAL COMPONENTS PROVIDED BY CASEWORK SUPPLIER UNLESS OTHERWISE NOTED.

C. G.C. TO PROVIDE CONTINUOUS WALL BLOCKING BEHIND CASEWORK.

D. CASEWORK FRAME AT BAR ENDS ARE SUPPORTED BY 90 DEGREE DIEWALL BASE.

E. ALL DIMENSIONS TAKEN FROM FRONTLINE DATUM POINT TO OUTSIDE CORNER OF DIEWALL BASE.

F. TOP EDGE OF DIEWALL FRAME TO BE INSTALLED AT 32 13/16" A.F.F. AT LOW POINT.

G. ALL DIMENSIONS ARE TO CENTER OF CABINET FRAME UNLESS NOTED OTHERWISE.

PERMIT SET - FOR CONSTRUCTION USE

© 2022 STARBUCKS COFFEE COMPANY

STARBUCKS®
2401 UTAH AVENUE SOUTH
SEATTLE, WASHINGTON 98134
(206) 318-1575

THESE DRAWINGS AND THE PROJECT MANUAL ARE CONFIDENTIAL AND SHALL REMAIN THE SOLE PROPERTY OF STARBUCKS CORPORATION, WHICH IS THE OWNER OF THE COPYRIGHT IN THIS WORK. THEY SHALL NOT BE REPRODUCED (IN WHOLE OR IN PART), SHARED WITH THIRD PARTIES OR USED IN ANY MANNER ON OTHER PROJECTS OR EXTENSIONS TO THIS PROJECT WITHOUT THE PRIOR WRITTEN CONSENT OF STARBUCKS CORPORATION. THESE DRAWINGS AND SPECIFICATIONS ARE INTENDED TO EXPRESS DESIGN INTENT FOR A PROTOTYPICAL STARBUCKS STORE (WHICH IS SUBJECT TO CHANGE AT ANYTIME) AND DO NOT REFLECT ACTUAL SITE CONDITIONS. NEITHER PARTY SHALL HAVE ANY OBLIGATION NOR LIABILITY TO THE OTHER (EXCEPT STATED ABOVE) UNTIL A WRITTEN AGREEMENT IS FULLY EXECUTED BY BOTH PARTIES.

STARBUCKS TEMPLATE VERSION: i2023.04.24

PABLO GARCIA, AIA, REG. FL NO. AR99297

Gensler

MAIN OFFICE
M. ARTHUR GENSLER JR. & ASSOCIATES
220 MONTGOMERY STREET, SUITE 200
SAN FRANCISCO, CA 94104 USA
Tel (415) 433.3700
Fax (415) 836.4599

SATELLITE OFFICE
M. ARTHUR GENSLER JR. & ASSOCIATES
FL QUALIFIER'S LIC. NO. AR96486
545 NW 26TH ST
SUITE 250
MIAMI, FL 33127 USA
Tel (305) 350.7070
Fax (305) 350.7071

PROJECT NAME:
ST LUCIE WEST & SW CASHEMERE BLVD

PROJECT ADDRESS:
920 SW SAINT LUCIE BLVD, PORT ST.LUCIE, FL 34986

STORE #:	81616
PROJECT #:	101357-001
ISSUE DATE:	07-08-2025
DESIGN MANAGER:	ASHLEY SUEIRAS
PRODUCTION DESIGNER:	GENSLER
CHECKED BY:	GENSLER

Revision Schedule

Rev	Date	By	Description

SHEET TITLE:
ADAPTABLE CASEWORK FRAMEWORK PLAN
SCALE: AS SHOWN

SHEET NUMBER:
I102.2

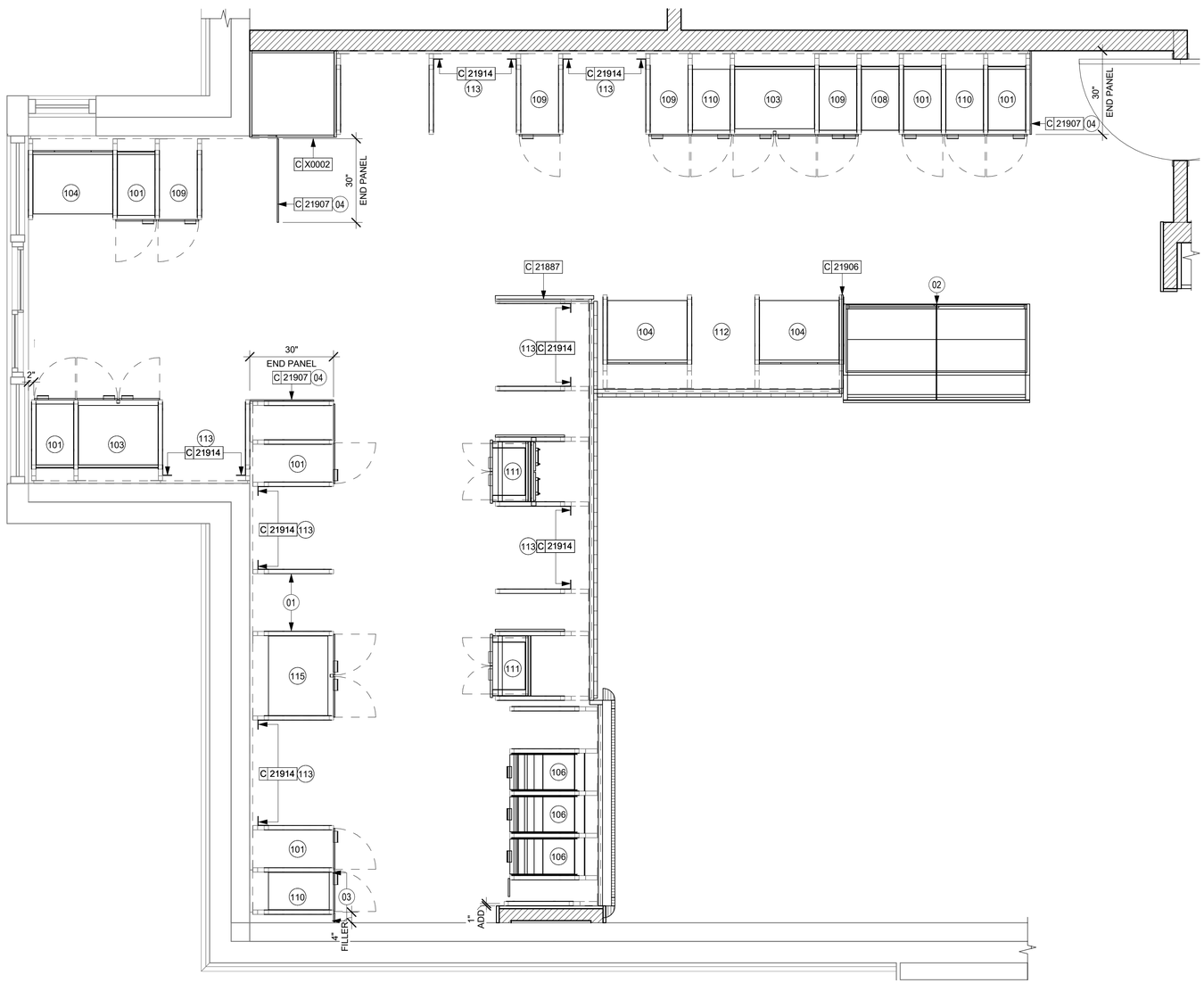

01 ADAPTABLE CASEWORK CABINET PLAN
Scale: 1/2" = 1'-0"

KEYED NOTES

01 NITRO EQUIPMENT LOCATION.
02 FOOD CASE.
03 FILLER FINISH PANEL TO BE SHIPPED LONGER THAN DIMENSIONED AND CUT TO FIT IN FIELD.
04 CASEWORK SUPPLIER TO PROVIDE ADDITIONAL BACKER SUBSTRATE TO ALIGN END CAP PANEL TO ADJACENT DOOR FACES.

GENERAL NOTES

A. SEE SHEET I102 FOR COMPLETE CASEWORK SCHEDULE.

B. ALL DIMENSIONS ARE TO CENTER OF FRAME ASSEMBLY.

C. CABINET PANELS:
> ALL CABINET SHELVING TO BE SECURED TO METAL COMPONENTS WITH #8 ROUND HEAD SCREWS.
> ALL METAL COMPONENTS SHALL BE SECURED TO FRAME ASSEMBLY AT KEY HOLE LOCATIONS.
> BOTTOM FLASHING SECURED TO HDPE WITH SILICONE.

D. SUBSTRATE PANELS:
> SUBSTRATE PANELS SHALL BE MOISTURE RESISTANT (MR) PLYWOOD, MDF OR HDF.
> CASEWORK VENDOR SHALL PROVIDE ALL SUB PANELS TO BE CUT TO SIZE PRIOR TO SHIPPING.
> CASEWORK VENDOR SHALL APPLY Z-CLIPS TO FINISH PANELS PRIOR TO SHIPPING.
> FRONTLINE PANELS TO BE SECURED TO SUBSTRATE VIA Z-CLIP APPLICATION.
> PANEL INSTALLATION TO START AT OUTSIDE CORNER LOCATIONS.
> END PANELS TO BE SCRIBED ON SITE.
> ALL PANEL CUT-OUTS SHALL BE FINISHED ALL AROUND.
> Z-CLIPS TO BE INSTALLED 1" AWAY FROM PANEL EDGE.

ADAPTABLE CASEWORK CABINET TYPES AND BILL OF MATERIALS SCHEDULE

KEY NUMBER	CABINET TYPE	FULL HT. DOORS	3/4 DOOR	3/4 DOOR W/ VENT	DRAWER	BOTTOM SHELF	ADJUST. SHELF	BACK PANEL	SIDE PANELS	BOX BASE^^
101	15" STORAGE	1 DID 21894	N/A	N/A	N/A	1 DID 21891	1 DID 21893	1 DID 21892	2** DID 21890	NO
102	18" STORAGE	1 DID 21901	N/A	N/A	N/A	1 DID 21898	1 DID 21900	1 DID 21899	2** DID 21890	NO
103	30" STORAGE	2 DID 21905	N/A	N/A	N/A	1 DID 21902	1 DID 21904	1 DID 21903	2** DID 21890	NO
104	30" POS	N/A	N/A	N/A	N/A	1 DID 21902	2 DID 21904	1 DID 21912	2** DID 21890	NO
105	21" POS	N/A	N/A	N/A	N/A	1 DID 22982	2 DID 22980	1 DID 22981	2** DID 21890	NO
106	15" DRAWER	N/A	1 DID 21895	N/A	1 DID 21896	1 DID 21891	1 DID 21893	1 DID 21892	2** DID 21890	NO
107	15" PRODUCTION CONTROLLER	N/A	N/A	1 DID 21897	1 DID 21896	1 DID 21891	1 DID 21893	1 DID 21892	2** DID 21890	NO
108	15" CUBBY - COFFEE	N/A	N/A	N/A	N/A	1 DID 21891	1 DID 21893	1 DID 21892	2** DID 21890	NO
109	15" CUBBY - TRASH	N/A	1/0* DID 21895	N/A	N/A	N/A	0	0	2** DID 21890	NO
110	15" SINK	1/0* DID 21894	N/A	N/A	N/A	1^ DID 21891	0	0	2** DID 21890	NO
111	15" ICE BIN	1/0* DID 21894	N/A	N/A	N/A	N/A	0	0	0 (1,2)** DID 21890	NO
112	24" SAFE	N/A	N/A	N/A	N/A	N/A	0	0	0 (1,2)** DID 21890	NO
113	30" REFRIGERATOR	N/A	N/A	N/A	N/A	N/A	0	0	0 (1,2)** DID 21890	NO
114	15" DEL	N/A	N/A	N/A	1 DID 22986	1 DID 21891	0	1 DID 21892	2** DID 21890	NO
115	30" SINK	1/0* DID 21894	N/A	N/A	N/A	1 DID 21902	0	0	2** DID 21890	NO

* DOOR NOT REQUIRED WHERE CUSTOMER VIEW IS LIMITED OR NEGLIGIBLE (i.e. FRONTLINE OR BEHIND WALLS)

** SIDE PANEL QUANTITY SHOWN IS FOR STAND-ALONE CABINETS; ACUTAL SIDE PANEL QUANTITY IS DEPENDENT ON ADJACENT CABINET TYPE AS SIDE PANELS CAN BE SHARED.

^ BOTTOM SHELF AND BOX BASE (IF APPLICABLE), SHOULD BE REMOVED AT SINK/ICE BIN CABINETS WITH FLOOR SINK LOCATED...

^^ BOX BASE TO BE PROVIDED AT SPECIFIC CABINETS WHEN REQUIRED BY JURISDICTIONAL CODE OR LOCAL OPERATOR PREFERENCE (NOTED AS "YES")

N

PERMIT SET - FOR CONSTRUCTION USE

© 2022 STARBUCKS COFFEE COMPANY

STARBUCKS®
2401 UTAH AVENUE SOUTH
SEATTLE, WASHINGTON 98134
(206) 318-1575

THESE DRAWINGS AND THE PROJECT MANUAL ARE CONFIDENTIAL AND SHALL REMAIN THE SOLE PROPERTY OF STARBUCKS CORPORATION, WHICH IS THE OWNER OF THE COPYRIGHT IN THIS WORK. THEY SHALL NOT BE REPRODUCED (IN WHOLE OR IN PART), SHARED WITH THIRD PARTIES OR USED IN ANY MANNER ON OTHER PROJECTS OR EXTENSIONS TO THIS PROJECT WITHOUT THE PRIOR WRITTEN CONSENT OF STARBUCKS CORPORATION. THESE DRAWINGS AND SPECIFICATIONS ARE INTENDED TO EXPRESS DESIGN INTENT FOR A PROTOTYPICAL STARBUCKS STORE (WHICH IS SUBJECT TO CHANGE AT ANYTIME) AND DO NOT REFLECT ACTUAL SITE CONDITIONS. NEITHER PARTY SHALL HAVE ANY OBLIGATION NOR LIABILITY TO THE OTHER (EXCEPT STATED ABOVE) UNTIL A WRITTEN AGREEMENT IS FULLY EXECUTED BY BOTH PARTIES.

STARBUCKS TEMPLATE VERSION: i2023.04.24

PABLO GARCIA, AIA, REG. FL NO. AR99297

Gensler
MAIN OFFICE
M. ARTHUR GENSLER JR. & ASSOCIATES
220 MONTGOMERY STREET, SUITE 200
SAN FRANCISCO, CA 94104 USA
Tel (415) 433.3700
Fax (415) 836.4599

SATELLITE OFFICE
M. ARTHUR GENSLER JR. & ASSOCIATES
FL QUALIFIER'S LIC. NO. AR96486
545 NW 26TH ST
SUITE 250
MIAMI, FL 33127 USA
Tel (305) 350.7070
Fax (305) 350.7071

PROJECT NAME:
ST LUCIE WEST & SW CASHEMERE BLVD

PROJECT ADDRESS:
920 SW SAINT LUCIE BLVD, PORT ST.LUCIE, FL 34986

STORE #: 81616
PROJECT #: 101357-001
ISSUE DATE: 07-08-2025
DESIGN MANAGER: ASHLEY SUEIRAS
PRODUCTION DESIGNER: GENSLER
CHECKED BY: GENSLER

Revision Schedule

Rev	Date	By	Description

SHEET TITLE:
ADAPTABLE CASEWORK CABINET PLAN
SCALE: AS SHOWN

SHEET NUMBER:
I102.3

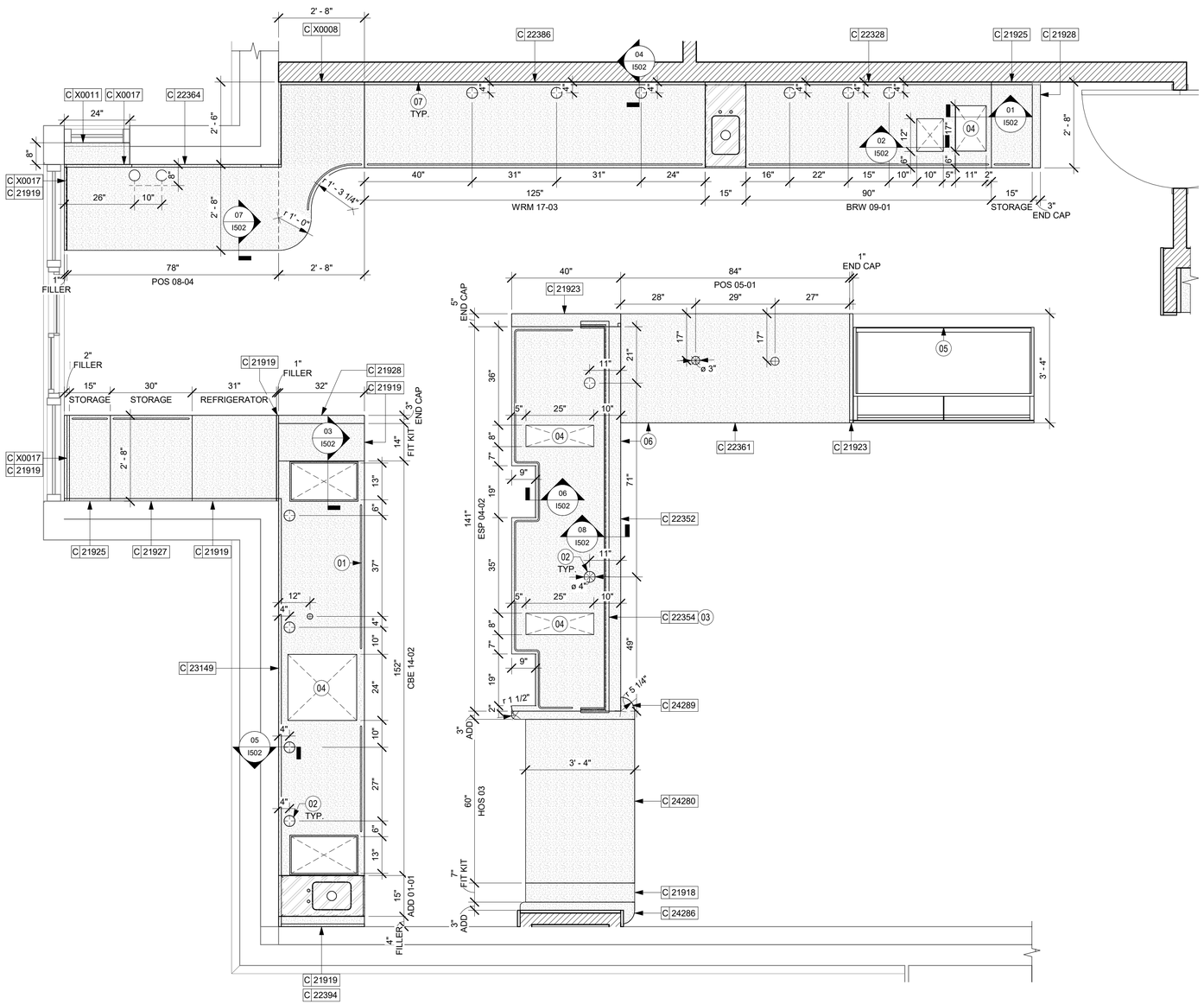

01 ADAPTABLE CASEWORK COUNTERTOP PLAN

Scale: 1/2" = 1'-0"

KEYED NOTES

01 LOCATE WATER TROUGH AT EDGE OF COUNTERTOP AS SHOWN.
02 RAISED EDGE GROMMETS.
03 CORIAN SHROUD AT ESPRESSO BAR.
04 CUT OUT FOR RECESSED SINK, ICE BIN OR TRASH DROP. SEE EQUIPMENT AND/OR MANUFACTURER'S CUTSHEETS FOR DIMENSIONS.
05 FOOD CASE.
06 OVERHANG EDGE 3IN.
07 BACKBAR W/ 8IN INTEGRAL BACKSPLASH.

GENERAL NOTES

A. SEE SHEET I102 FOR COMPLETE CASEWORK SCHEDULE.

B. G.C.'S INSTALLER SHALL VERIFY COUNTER CHANNEL REQUIREMENTS PRIOR TO CUTTING IN FIELD.

C. G.C./INSTALLER TO VERIFY COUNTERTOP SUPPORT CHANNEL MEASUREMENTS PRIOR TO CUTTING. FIELD CUT AT SINKS AND ICE BINS.

D. "C" CHANNEL MOUNTS OVER FRONT AND REAR INDEX BRACKETS WHICH ARE INSERTED INTO FRAMEWORK.

E. SILICONE SEAM AT TRANSITION FROM COUNTERTOP TO HAND SINKS.

F. SILICONE AND SEAL ALL SEAMS BETWEEN SINKS, EQUIPMENT AND COUNTERTOPS.

G. ONCE COUNTERTOP IS SET, LEVELED AND SEAMED, SECURE CHANNEL TO UNDERSIDE OF SUBSTRATE.

LEGEND

INDICATES STAINLESS STEEL (SST) COUNTERTOP

INDICATES SOLID SURFACE (SS) COUNTERTOP

DATUM POINT

INDICATES CORNER GUARD FOR BOH. INSTALL 6" (150MM) TO 42" (1065MM) A.F.F. UNLESS OTHERWISE NOTED. — C 10829

INDICATES CORNER GUARD. FULL HEIGHT. — C X0021

INDICATES FRY REGLET Y TRIM (1/4" POST OUTSIDE CORNER) FOR WOOD CLADDING — C X0022

INDICATES SCHLUTER FINEC-SQ TRIM 3/16", FINISH: MATTE BLACK TEXTURED COLOR-COATED ALUMINUM. — C X0023

ADAPTABLE CASEWORK COUNTERTOP SCHEDULE - "C"

DESIGN ID	COUNT	DESCRIPTION	FURN. BY	INST. BY	COMMENTS
COUNTERTOP					
21918	1	COUNTERTOP - FILLER FRONTBAR - VARIABLE LENGTH	SB	GC	
21919	6	COUNTERTOP - FILLER BACKBAR - VARIABLE LENGTH	SB	GC	
21923	2	COUNTERTOP - END CAP FRONTBAR	SB	GC	
21925	2	COUNTERTOP - BACKBAR - 15IN 380MM	SB	GC	
21927	1	COUNTERTOP - BACKBAR - 30IN 760MM	SB	GC	
21928	2	COUNTERTOP - END CAP BACKBAR	SB	GC	
22328	1	COUNTERTOP - BREW - LF - 90IN 2285MM	SB	GC	
22352	1	COUNTERTOP - ESPRESSO FRONTBAR - LF - 141IN 3580MM	SB	GC	
22354	1	COUNTERTOP - ESPRESSO SHROUD - 141IN 3580MM	SB	GC	
22361	1	COUNTERTOP - POS - 84IN 2135MM	SB	GC	
22364	1	COUNTERTOP - DT POS - LF - 94IN 2390MM	SB	GC	
22386	1	COUNTERTOP - WARMING WITH RACK - LF - 125IN 3175MM	SB	GC	
22394	2	COUNTERTOP - BACKSPLASH - VARIABLE LENGTH	SB	GC	
22395	2	COUNTERTOP - HAND SINK LOW SPLASH - 15IN 380MM	SB	GC	
23149	1	COUNTERTOP - CBE RINSE SINK 90LB ICE BINS - RF - 152IN 3860MM	SB	GC	
24280	1	COUNTERTOP - HOS FRONTBAR - 60IN 1525MM	SB	GC	
24286	2	COUNTERTOP - HOS FRONTBAR TRANSITION FILLER	SB	GC	
X0008	1	CUSTOM COUNTERTOP - BACKBAR CORNER - VARIABLE LENGTH	SB	GC	FINISH: CP005 - CORIAN - BLACK WITH FLECKS
X0011	1	COUNTERTOP - WINDOW SILL	SB	GC	FINISH: CP005 - CORIAN - BLACK WITH FLECKS. LENGTH REQUIRED (V.I.F.):8" X 24"
X0017	3	COUNTERTOP - BACKSPLASH - VARIABLE LENGTH	SB	GC	

N

PERMIT SET - FOR CONSTRUCTION USE

© 2022 STARBUCKS COFFEE COMPANY

STARBUCKS®
2401 UTAH AVENUE SOUTH
SEATTLE, WASHINGTON 98134
(206) 318-1575

THESE DRAWINGS AND THE PROJECT MANUAL ARE CONFIDENTIAL AND SHALL REMAIN THE SOLE PROPERTY OF STARBUCKS CORPORATION, WHICH IS THE OWNER OF THE COPYRIGHT IN THIS WORK. THEY SHALL NOT BE REPRODUCED (IN WHOLE OR IN PART), SHARED WITH THIRD PARTIES OR USED IN ANY MANNER ON OTHER PROJECTS OR EXTENSIONS TO THIS PROJECT WITHOUT THE PRIOR WRITTEN CONSENT OF STARBUCKS CORPORATION. THESE DRAWINGS AND SPECIFICATIONS ARE INTENDED TO EXPRESS DESIGN INTENT FOR A PROTOTYPICAL STARBUCKS STORE (WHICH IS SUBJECT TO CHANGE AT ANYTIME) AND DO NOT REFLECT ACTUAL SITE CONDITIONS. NEITHER PARTY SHALL HAVE ANY OBLIGATION NOR LIABILITY TO THE OTHER (EXCEPT STATED ABOVE) UNTIL A WRITTEN AGREEMENT IS FULLY EXECUTED BY BOTH PARTIES.

STARBUCKS TEMPLATE VERSION: i2023.04.24

PABLO GARCIA, AIA, REG. FL NO. AR99297

Gensler

MAIN OFFICE
M. ARTHUR GENSLER JR. & ASSOCIATES
220 MONTGOMERY STREET, SUITE 200
SAN FRANCISCO, CA 94104 USA
Tel (415) 433.3700
Fax (415) 836.4599

SATELLITE OFFICE
M. ARTHUR GENSLER JR. & ASSOCIATES
FL QUALIFIER'S LIC. NO: AR96486
545 NW 26TH ST
SUITE 250
MIAMI, FL 33127 USA
Tel (305) 350.7070
Fax (305) 350.7071

PROJECT NAME:
ST LUCIE WEST & SW CASHEMERE BLVD

PROJECT ADDRESS:
920 SW SAINT LUCIE BLVD, PORT ST.LUCIE, FL 34986

STORE #:	81616
PROJECT #:	101357-001
ISSUE DATE:	07-08-2025
DESIGN MANAGER:	ASHLEY SUEIRAS
PRODUCTION DESIGNER:	GENSLER
CHECKED BY:	GENSLER

Revision Schedule

Rev	Date	By	Description

SHEET TITLE:
ADAPTABLE CASEWORK COUNTERTOP PLAN
SCALE: AS SHOWN

SHEET NUMBER:
I102.4

CEILING TREATMENT SCHEDULE - "U"

DESIGN ID	AREA	DESCRIPTION	FURN. BY	INST. BY	COMMENTS
OTHER					
19734	126 SF	ACT - ULTIMA - 2X2FT 61X61CM	GC	GC	FINISH: SW9090 CARAIBE. INSTALLATION SHALL BE IN STRICT ACCORDANCE W/ MANUFACTURER'S INSTRUCTIONS. CANNOT BE PAINTED IN FIELD, DOING SO WILL VOID ITS WARRANTY. FOR ORDERING CONTACT DEB PICKENS AT DLPICKENS@ARMSTRONGCEILINGS.COM , PH: (480) 695-9053.
X1000	855 SF	ACT - WHITE - 2X4FT 61X122CM	GC	GC	FOR ORDERING CONTACT DEB PICKENS AT DLPICKENS@ARMSTRONGCEILINGS.COM , PH: 480-695-9053
X1001	177 SF	ACT - CIRRUS BEVELED SUPRAFINE PAINTED - 2X4FT 61X122CM	GC	GC	FINISH: SW7031 MEGA GREIGE. INSTALLATION SHALL BE IN STRICT ACCORDANCE W/ MANUFACTURER'S INSTRUCTIONS. CANNOT BE PAINTED IN FIELD, DOING SO WILL VOID ITS WARRANTY. FOR ORDERING CONTACT DEB PICKENS AT DLPICKENS@ARMSTRONGCEILINGS.COM , PH: (480) 695-9053.
X1100	1651 SF	GWB WITH LEVEL 4 FINISH - PAINT AS SCHEDULED.	GC	GC	FINISH: SW7031 MEGA GREIGE AT RESTROOMS & SW9090 CARAIBE AT CAFE.

PAINT SCHEDULE

DESIGN ID	COLOR	DESCRIPTION	LRV	FURN. BY	INST. BY	COMMENTS
20438	SW7020	SW7020 BLACK FOX, OR EQUIVALENT	8	GC	GC	SW USE PRIMER CP-1; NCS - S 7502-Y; AKZO NOBEL - 30YY 10/038
20441	SW7031	SW7031 MEGA GREIGE, OR EQUIVALENT	37	GC	GC	SW USE PRIMER CP-1; NCS - S 3005-Y50R; AKZO NOBEL - 20YY 37/094
X0305	<varies>	PLASTIC - BLACK HDPE	13	GC	GC	SW USE PRIMER CP-1

LIGHTING LEGEND

CAN - LED ADJUSTABLE RECESSED - 3IN 75MM - BLACK - 800LM FLOOD	L	21771
CAN - LED ADJUSTABLE RECESSED - 3IN 75MM - BLACK - 700LM WIDE FLOOD	L	21773
TRACK - LED FIXTURE WITH SNOOT - 3IN 75MM - BLACK - 1100LM FLOOD	L	21779
STRIP - LED TAPE IN HOUSING - VARIABLE LENGTH - BLACK - 350LM PER FT	L	22215
STRIP - LED TAPE IN HOUSING - VARIABLE LENGTH - BLACK - 350LM PER FT	L	22217
LIGHT DIRECTIONAL SYMBOL		

NOTES:
- LEGEND IS DEPENDENT ON COLORS USED FOR COMPLETE SCOPE INFORMATION.
- REFER TO SHEET I103.1 FOR LIGHTING LOCATIONS AND INFORMATION.

KEYED NOTES

01 INSTALL RECESSED CAN FIXTURES AS SCHEDULED. REFER TO ELECTRICAL SHEETS FOR ADDITIONALINFORMATION.
02 PAINT CEILING DIFFUSERS TO MATCH ADJACENT CEILING AS INDICATED IN PAINT SCHEDULE TONE.
03 WASHABLE CEILING TILE LOCATED IN BACK OF HOUSE. EXISTING TILES TO BE CLEANED/ REPAIRED OR REPLACED TO ACHIEVE LIKE-NEW CONDITION.
04 PLATFORM FOR HEATER AND WATER FILTRATION.
05 PENDANT CEILING MOUNTED MUSIC SPEAKER. LOCATE PER PLANS. FINISH COLOR TO BE BLACK OR PAINT TO MATCH ADJACENT FINISH.
06 SECURITY CAMERA LOCATION FOR REFERENCE. INSTALL AT SAME HEIGHT AS ADJACENT STORE LIGHTING. THIRD PARTY VENDOR TO DETERMINE FINAL LOCATIONS WITH STARBUCKS' CONSTRUCTION MANAGER.
07 MOUNT DRIVE THRU CAMERA INSTALLED AT 36" TO 72" (915MM TO 1830MM) FROM DRIVE THRU WINDOW WITH CLEAR VIEW OF CUSTOMER AND DRIVE THRU POS.
08 LOCATE SECURITY HEAD UNIT AT MANAGER'S WORKSTATION.
09 INSTALL DIGITAL MENU AS SCHEDULED PER INDICATED DETAILS. REFER TO INTERIOR FINISH ELEVATIONS SHEETS FOR MOUNTING HEIGHTS.
10 WIRELESS ACCESS POINT: LOCATE (2) PER STORE, ONE ABOVE POS, ONE NEAR MANAGER'S WORKSTATION.
11 MOUNT RESTROOM WALL SCONCE WITH CENTER OF J-BOX AT 6' - 8" AFF AS INDICATED ON RESTROOM ELEVATIONS.
12 INSTALL LED STRIP LIGHT AS INDICATED. REFER TO CASEWORK DETAIL.
13 EXISTING EXTERIOR CANOPY RECESSED CAN LIGHTS BY LL.
17 MOUNT WALL SPEAKER AT 9'-0" (3660MM) A.F.F. OR AS CEILING PERMITS. FINISH COLOR TO BE BLACK OR PAINT TO MATCH ADJACENT FINISH.
20 EXISTING EXTERIOR WALL SCONCES BY LL.
21 LED STRIP IN FRONT BAR. REFER TO I201 INTERIOR FINISH ELEVATIONS FOR MORE INFORMATION.
22 PAINT STRUCTURE, HVAC DUCTS AND DECK ABOVE ACOUSTICAL BAFFLE SYSTEM TO MATCH SW7020 BLACK FOX.
24 BLOCKING TO BE PROVIDED AS REQUIRED TO SUPPORT CEILING ATTACHMENTS. EXTEND BLOCKING 4" (100MM) BEYOND EDGE OF ATTACHMENTS.
25 AIR CURTAIN PER JURISDICTIONAL REQUIREMENTS.

GENERAL NOTES

A. REFERENCE LOW VOLTAGE PLAN SHEET AND ELECTRICAL DRAWINGS.
B. IF REQUIRED BY LOCAL CODE, GENERAL CONTRACTOR TO PROVIDE SEMI-RECESSED SPRINKLER HEADS WITH POLISHED CHROME ESCUTCHEONS CENTERED IN ACOUSTICAL CEILING TILE. IF PENDANT HEADS ARE REQUIRED IN GWB SOFFIT OVER FRONT BAR, CONCEAL SUPPLY PIPING WITHIN SOFFIT. GENERAL CONTRACTOR TO SUBMIT SPRINKLER LAYOUT TO STARBUCKS' CONSTRUCTION MANAGER FOR APPROVAL PRIOR TO INSTALLATION.
C. LEAVE TEN (10) ADDITIONAL RETAIL CEILING TILES TO MATCH RETAIL CEILING PAINT COLOR ABOVE THE WORKROOM CEILING AT MANAGER'S DESK FOR FUTURE USE.
D. PROVIDE GROMMET AT ACOUSTIC CEILING PENETRATIONS FOR FIXTURES OF SUPPORTS.
E. HEATING, VENTILATING AND AIR CONDITIONING SHOWN ON THIS PLAN PROVIDED FOR REFERENCE ONLY. SEE MECHANICAL DRAWINGS FOR ADDITIONAL INFORMATION.
F. DIFFUSERS AND RETURNS IN ACOUSTICAL CEILING TILE TO BE CENTERED IN TILE AND PAINTED TO MATCH ADJACENT FINISHES (TYP.).
G. PAINT ALL EXPOSED HVAC DUCTS, HVAC DIFFUSERS, LIGHT TRIM RINGS, PIPING, CONDUIT AND JUNCTION BOXES THE SAME COLOR AS SPECIFIED ON SURROUNDING CEILING OR SOFFIT UNLESS OTHERWISE NOTED. TYPICAL THROUGHOUT RETAIL AREA OF STORE.
H. PAINT SUBSTITUTIONS ARE NOT ALLOWED. USE STARBUCKS' NATIONAL ACCOUNT "COLOR CODE" WHEN ORDERING PAINTS.
I. OVERHEAD DATA CABLING SHALL BE IN PLENUM WHEN AVAILABLE.
J. DATA CABLING AT EXPOSED CEILING SHALL BE INSTALLED IN METAL CONDUIT OR PER LOCAL CODE REQUIREMENT.

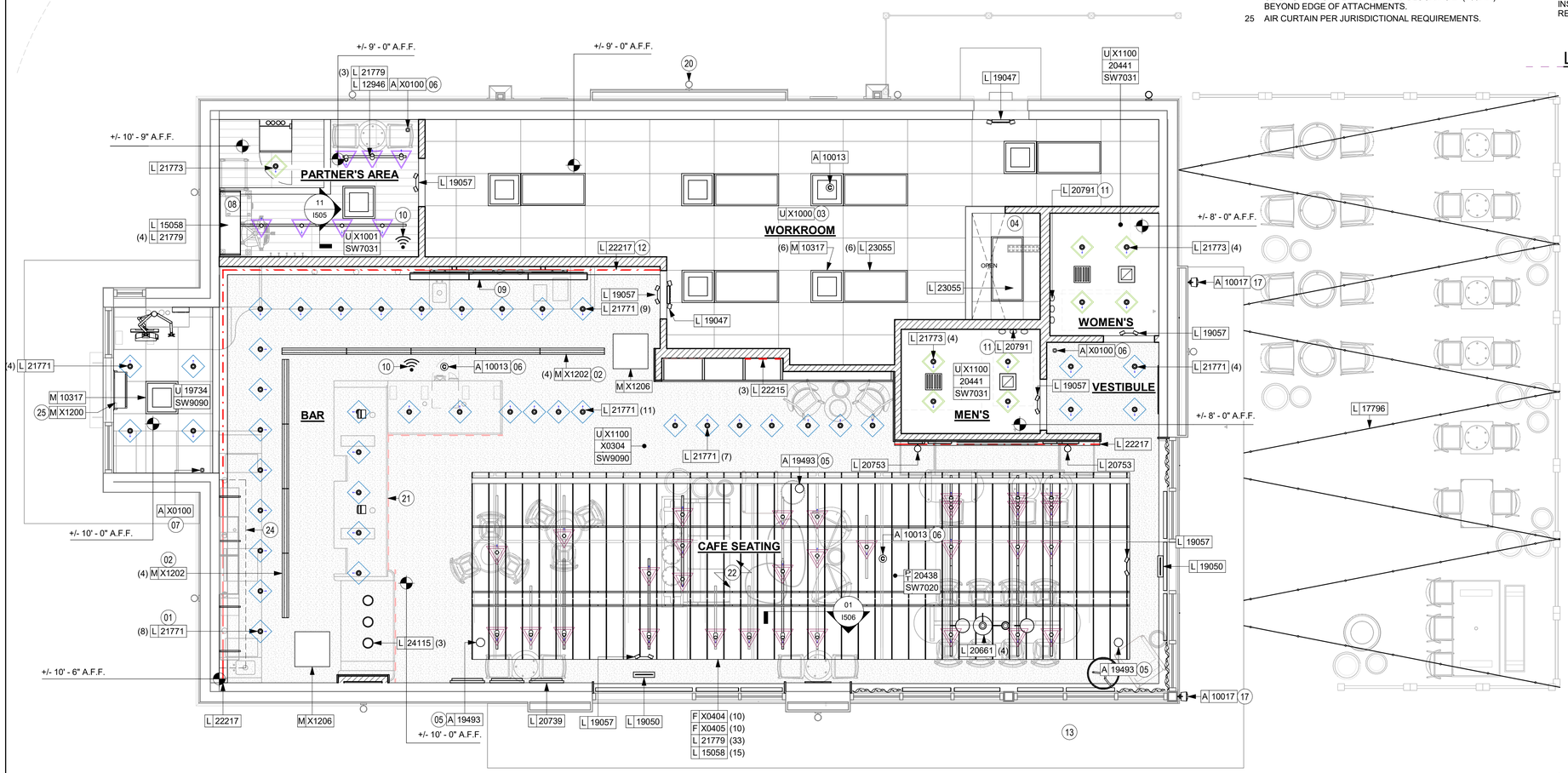

01 REFLECTED CEILING PLAN
Scale: 1/4" = 1'-0"

LEGEND

- EXISTING ITEM/EQUIPMENT FOR FUTURE
- EXISTING ITEM/EQUIPMENT TO BE REUSED
- EXISTING ITEM/EQUIPMENT TO REMAIN
- ADJACENT TENANT

NOTE: LEGEND IS DEPENDENT ON COLORS USED FOR COMPLETE SCOPE INFORMATION.

- ELEVATION DATUM
- STARTING POINT
- TRACK LIGHTING
- STRIP LIGHTING
- PENDANT LIGHT
- RECESSED CAN LIGHT
- TROFFER
- EXIT SECURITY LIGHT
- EXIT SIGN/ EMERGENCY LIGHTING COMBO
- MUSIC SYSTEM WALL MOUNTED SPEAKER
- 360° SECURITY CAMERA
- SUPPLY AIR
- RETURN AIR
- EXHAUST FAN
- PIR MOTION SENSOR
- WALL MOUNTED SPEAKER
- WALL SCONCE AT RESTROOM
- WIFI ACCESS POINT (WAP)
- (E) 2'X2' ACT SUSPENDED CEILING SYSTEM
- (E) 2'X4' ACT SUSPENDED CEILING SYSTEM

PERMIT SET - FOR CONSTRUCTION USE

© 2022 STARBUCKS COFFEE COMPANY

STARBUCKS®
2401 UTAH AVENUE SOUTH
SEATTLE, WASHINGTON 98134
(206) 318-1575

THESE DRAWINGS AND THE PROJECT MANUAL ARE CONFIDENTIAL AND SHALL REMAIN THE SOLE PROPERTY OF STARBUCKS CORPORATION, WHICH IS THE OWNER OF THE COPYRIGHT IN THIS WORK. THEY SHALL NOT BE REPRODUCED (IN WHOLE OR IN PART), SHARED WITH THIRD PARTIES OR USED IN ANY MANNER ON OTHER PROJECTS OR EXTENSIONS TO THIS PROJECT WITHOUT THE PRIOR WRITTEN CONSENT OF STARBUCKS CORPORATION. THESE DRAWINGS AND SPECIFICATIONS ARE INTENDED TO EXPRESS DESIGN INTENT FOR A PROTOTYPICAL STARBUCKS STORE (WHICH IS SUBJECT TO CHANGE AT ANYTIME) AND DO NOT REFLECT ACTUAL SITE CONDITIONS. NEITHER PARTY SHALL HAVE ANY OBLIGATION NOR LIABILITY TO THE OTHER (EXCEPT STATED ABOVE) UNTIL A WRITTEN AGREEMENT IS FULLY EXECUTED BY BOTH PARTIES.

STARBUCKS TEMPLATE VERSION: i2023.04.24

PABLO GARCIA, AIA, REG. FL NO. AR99297

Gensler
MAIN OFFICE
M. ARTHUR GENSLER JR. & ASSOCIATES
220 MONTGOMERY STREET, SUITE 200
SAN FRANCISCO, CA 94104 USA
Tel (415) 433.3700
Fax (415) 836.4599

SATELLITE OFFICE
M. ARTHUR GENSLER JR. & ASSOCIATES
FL QUALIFIER'S LIC. NO. AR96486
545 NW 26TH ST
SUITE 250
MIAMI, FL 33127 USA
Tel (305) 350.7070
Fax (305) 350.7071

PROJECT NAME:
ST LUCIE WEST & SW CASHEMERE BLVD

PROJECT ADDRESS:
920 SW SAINT LUCIE BLVD, PORT ST.LUCIE, FL 34986

STORE #:	81616
PROJECT #:	101357-001
ISSUE DATE:	07-08-2025
DESIGN MANAGER:	ASHLEY SUEIRAS
PRODUCTION DESIGNER:	GENSLER
CHECKED BY:	GENSLER

Revision Schedule

Rev	Date	By	Description

SHEET TITLE:
REFLECTED CEILING PLAN
SCALE: AS SHOWN

SHEET NUMBER:
I103

LIGHTING FIXTURE SCHEDULE - "L"

DESIGN ID	COUNT	DESCRIPTION	FURN. BY	INST. BY	BULB	COMMENTS
X0601	1	WEST ELM - LOUIS TABLE LAMP 13" - BLACK	SB	GC	INTEGRATED LED	WEST ELM. SKU: 9168203. lead time 2 weeks
EXIT						
19047	2	LED EXIT SIGN WITH EMERGENCY LIGHT - BLACK AND GREEN	SB	GC	INTEGRATED LED	
19050	2	LED EXIT SIGN RECESSED - ALUMINUM AND GREEN	SB	GC	INTEGRATED LED	
19057	6	LED EMERGENCY LIGHT DOUBLE - BLACK	SB	GC	INTEGRATED LED	
LAMP						
X0600	1	FLOOR LAMP - MID-CENTURY TRIPOD - 66IN 1676.4MM - ANTIQUE BRONZE	SB	GC	23W CFL BULB OR A 100W INCANDESCENT BULB	WEST ELM, SKU: 3993230. LEAD TIME 2 WEEKS
OTHER						
17796	8	LED STRING LIGHTS - 48FT 1463CM	SB	GC	INTEGRATED LED	
PENDANT						
20661	4	PENDANT - ANDLIGHT SPOTLIGHT VOLUMES - BLACK	SB	GC	AS PACKAGED: 1X LED G25 6.5W (DOWN); 1X LED A15 4.5W (UP)	Combinations: C/A, C/C, B/C, C/A
24115	3	PENDANT - PENSEE - PEARL BROWN AND GOLD	SB	GC		
RECESSED CAN						
21771	43	CAN - LED ADJUSTABLE RECESSED - 3IN 75MM - BLACK - 800LM FLOOD	SB	GC	INTEGRATED LED	
21773	9	CAN - LED ADJUSTABLE RECESSED - 3IN 75MM - BLACK - 700LM WF	SB	GC	INTEGRATED LED	
SCONCE						
14355	1	SCONCE - MESH CYLINDER SMALL- BRONZE	SB	GC	(1) LED 5W 2700K (INCLUDED) OR EQUAL	
20739	3	SCONCE - KUZCO VEGA - 23IN 585MM - BLACK	SB	GC	INTEGRATED LED	
20753	2	SCONCE - MATTEO BLINK - BLACK	SB	GC	AS PACKAGED: 1X LED G16.5 4W CANDELABRA BASE	
20791	2	SCONCE - RBW PASTILLE VANITY - BLACK	SB	GC	INTEGRATED LED	
STRIP						
22215	6	STRIP - LED TAPE IN HOUSING - VARIABLE LENGTH - BLACK - 350LM PER FT	SB	GC	INTEGRATED LED	FIELD TRIMMABLE TO 0.9IN LENGTHS (V.I.F): (1) 78"

LIGHTING FIXTURE SCHEDULE - "L"

DESIGN ID	COUNT	DESCRIPTION	FURN. BY	INST. BY	BULB	COMMENTS
22217	3	STRIP - LED TAPE - VARIABLE LENGTH - 350LM PER FT	SB	GC	INTEGRATED LED	FIELD TRIMMABLE TO 0.9IN LENGTHS (V.I.F): (1) 251" (1) 576"
TRACK						
12946	1	TRACK - WITH CONNECTORS - 4FT 122CM - BLACK - 1 CIRCUIT	SB	GC		
15058	14	TRACK - WITH CONNECTORS - 6FT 183CM - BLACK - 1 CIRCUIT	SB	GC		
21779	38	TRACK - LED FIXTURE WITH SNOOT - 3IN 75MM - BLACK - 1100LM FLOOD	SB	GC	INTEGRATED LED	
TROFFER						
23055	7	TROFFER - LED RECESSED - 24X48IN 600X1200MM - WHITE - 2700K	SB	GC	INTEGRATED LED	

KEYED NOTES

01 STARTING POINT FOR CEILING TILE GRID INSTALLATION. TYPE AND FINISH AS SCHEDULED.

02 CENTER EMERGENCY FIXTURE. REFER TO INTERIOR ELEVATIONS FOR MOUNTING HEIGHTS AND ELECTRICAL SHEETS FOR ADDITIONAL INFORMATION. GC TO VERIFY FINAL PLACEMENT WITH LOCAL FIRE MARSHALL PRIOR TO INSTALLATION.

05 PENDANT MUSIC SPEAKER. LOCATE PER PLANS. FINISH COLOR TO BE BLACK OR PAINT TO MATCH ADJACENT FINISH.

06 CEILING ACCESS DOOR.

07 BLOCKING TO BE PROVIDED AS REQUIRED TO SUPPORT SHELF ATTACHMENT. EXTEND BLOCKING 4" (100MM) BEYOND EDGE OF ATTACHMENTS.

LIGHTING LEGEND

CAN - LED ADJUSTABLE RECESSED - 3IN 75MM - BLACK - 800LM FLOOD	L 21771
CAN - LED ADJUSTABLE RECESSED - 3IN 75MM - BLACK - 700LM WIDE FLOOD	L 21773
TRACK - LED FIXTURE WITH SNOOT - 3IN 75MM - BLACK - 1100LM FLOOD	L 21779
STRIP - LED TAPE IN HOUSING - VARIABLE LENGTH - BLACK - 350LM PER FT	L 22215
STRIP - LED TAPE IN HOUSING - VARIABLE LENGTH - BLACK - 350LM PER FT	L 22217
LIGHT DIRECTIONAL SYMBOL	

NOTES:
- LEGEND IS DEPENDENT ON COLORS USED FOR COMPLETE SCOPE INFORMATION.
- REFER TO SHEET I103.1 FOR LIGHTING LOCATIONS AND INFORMATION.

GENERAL NOTES

A. REFERENCE LOW VOLTAGE PLAN SHEET AND ELECTRICAL DRAWINGS.

B. IF REQUIRED BY LOCAL CODE, GENERAL CONTRACTOR TO PROVIDE SEMI-RECESSED SPRINKLER HEADS WITH POLISHED CHROME ESCUTCHEONS CENTERED IN ACOUSTICAL CEILING TILE. IF PENDANT HEADS ARE REQUIRED IN GWB SOFFIT OVER FRONT BAR, CONCEAL SUPPLY PIPING WITHIN SOFFIT. GENERAL CONTRACTOR TO SUBMIT SPRINKLER LAYOUT TO STARBUCKS' CONSTRUCTION MANAGER FOR APPROVAL PRIOR TO INSTALLATION.

C. LEAVE TEN (10) ADDITIONAL RETAIL CEILING TILES TO MATCH RETAIL CEILING PAINT COLOR ABOVE THE WORKROOM CEILING AT MANAGER'S DESK FOR FUTURE USE.

D. PROVIDE GROMMET AT ACOUSTIC CEILING PENETRATIONS FOR FIXTURES OF SUPPORTS.

E. HEATING, VENTILATING AND AIR CONDITIONING SHOWN ON THIS PLAN PROVIDED FOR REFERENCE ONLY. SEE MECHANICAL DRAWINGS FOR ADDITIONAL INFORMATION.

F. DIFFUSERS AND RETURNS IN ACOUSTICAL CEILING TILE TO BE CENTERED IN TILE AND PAINTED TO MATCH ADJACENT FINISHES (TYP.).

G. PAINT ALL EXPOSED HVAC DUCTS, HVAC DIFFUSERS, LIGHT TRIM RINGS, PIPING, CONDUIT AND JUNCTION BOXES THE SAME COLOR AS SPECIFIED ON SURROUNDING CEILING OR SOFFIT UNLESS OTHERWISE NOTED. TYPICAL THROUGHOUT RETAIL AREA OF STORE.

H. PAINT SUBSTITUTIONS ARE NOT ALLOWED. USE STARBUCKS' NATIONAL ACCOUNT "COLOR CODE" WHEN ORDERING PAINTS.

I. DATA CABLING ABOVE HEAD SHALL BE IN PLENUM WHEN AVAILABLE.

J. DATA CABLING AT EXPOSED CEILING SHALL BE INSTALLED IN METAL CONDUIT OR PER LOCAL CODE REQUIREMENT.

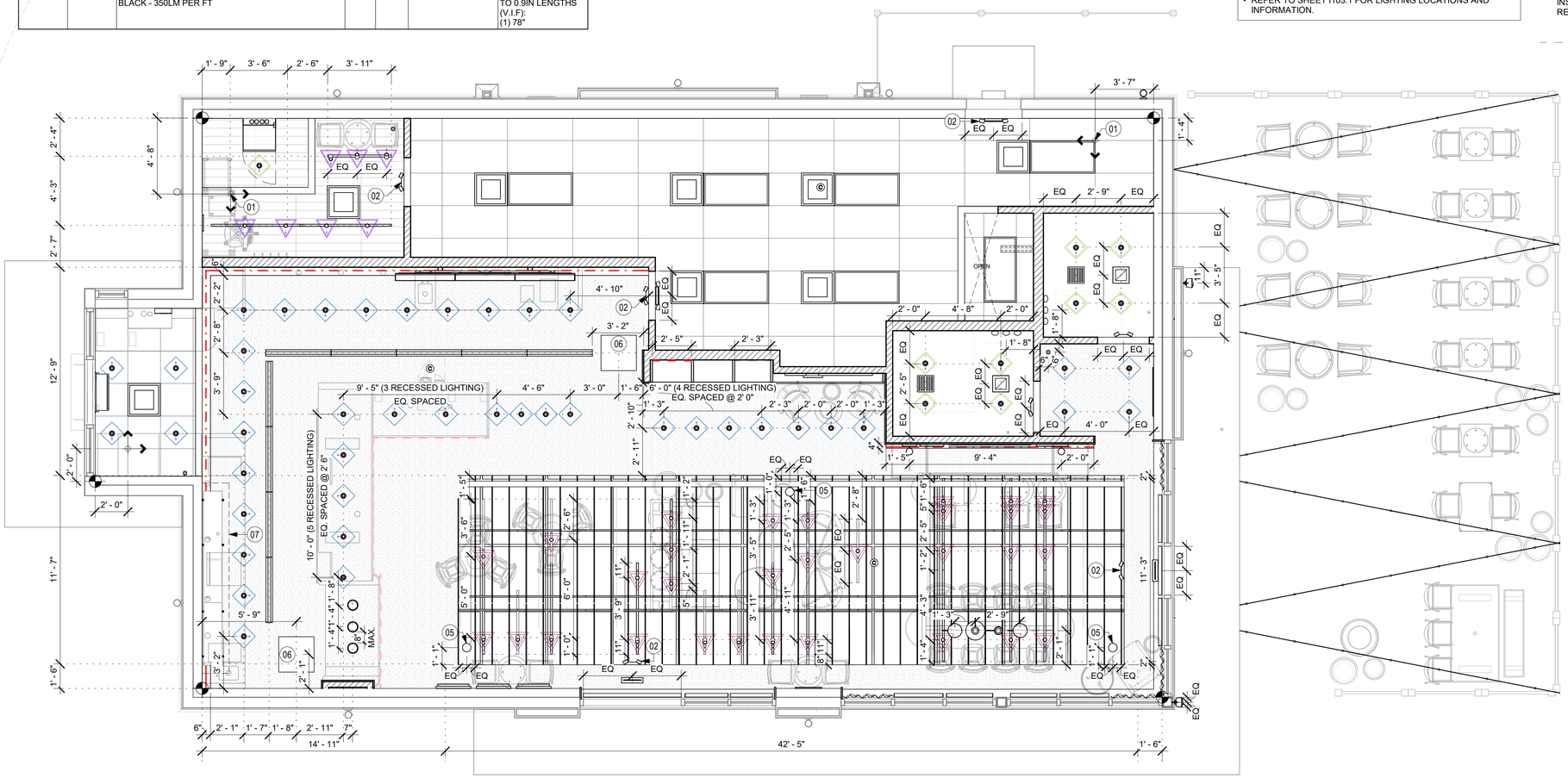

01 REFLECTED CEILING PLAN
Scale: 1/4" = 1'-0"

LEGEND

- EXISTING ITEM/EQUIPMENT FOR FUTURE
- EXISTING ITEM/EQUIPMENT TO BE REUSED
- EXISTING ITEM/EQUIPMENT TO REMAIN
- ADJACENT TENANT

NOTE: LEGEND IS DEPENDENT ON COLORS USED FOR COMPLETE SCOPE INFORMATION.

- ELEVATION DATUM
- STARTING POINT
- TRACK LIGHTING
- STRIP LIGHTING
- PENDANT LIGHT
- RECESSED CAN LIGHT
- TROFFER
- EXIT SECURITY LIGHT
- EXIT SIGN/ EMERGENCY LIGHTING COMBO
- MUSIC SYSTEM WALL MOUNTED SPEAKER
- 360° SECURITY CAMERA
- SUPPLY AIR
- RETURN AIR
- EXHAUST FAN
- PIR MOTION SENSOR
- WALL MOUNTED SPEAKER
- WALL SCONCE AT RESTROOM
- WIFI ACCESS POINT (WAP)
- (E) 2'X2' ACT SUSPENDED CEILING SYSTEM
- (E) 2'X4' ACT SUSPENDED CEILING SYSTEM

PERMIT SET - FOR CONSTRUCTION USE

© 2022 STARBUCKS COFFEE COMPANY

STARBUCKS®
2401 UTAH AVENUE SOUTH
SEATTLE, WASHINGTON 98134
(206) 318-1575

THESE DRAWINGS AND THE PROJECT MANUAL ARE CONFIDENTIAL AND SHALL REMAIN THE SOLE PROPERTY OF STARBUCKS CORPORATION, WHICH IS THE OWNER OF THE COPYRIGHT IN THIS WORK. THEY SHALL NOT BE REPRODUCED (IN WHOLE OR IN PART), SHARED WITH THIRD PARTIES OR USED IN ANY MANNER ON OTHER PROJECTS OR EXTENSIONS TO THIS PROJECT WITHOUT THE PRIOR WRITTEN CONSENT OF STARBUCKS CORPORATION. THESE DRAWINGS AND SPECIFICATIONS ARE INTENDED TO EXPRESS DESIGN INTENT FOR A PROTOTYPICAL STARBUCKS STORE (WHICH IS SUBJECT TO CHANGE AT ANYTIME) AND DO NOT REFLECT ACTUAL SITE CONDITIONS. NEITHER PARTY SHALL HAVE ANY OBLIGATION NOR LIABILITY TO THE OTHER (EXCEPT STATED ABOVE) UNTIL A WRITTEN AGREEMENT IS FULLY EXECUTED BY BOTH PARTIES.

STARBUCKS TEMPLATE VERSION: i2023.04.24

PABLO GARCIA, AIA, REG. FL NO. AR99297

Gensler
MAIN OFFICE
M. ARTHUR GENSLER JR. & ASSOCIATES
220 MONTGOMERY STREET, SUITE 200
SAN FRANCISCO, CA 94104 USA
Tel (415) 433.3700
Fax (415) 836.4599

SATELLITE OFFICE
M. ARTHUR GENSLER JR. & ASSOCIATES
FL QUALIFIER'S LIC. NO: AR96486
545 NW 26TH ST
SUITE 250
MIAMI, FL 33127 USA
Tel (305) 350.7070
Fax (305) 350.7071

PROJECT NAME:
ST LUCIE WEST & SW CASHEMERE BLVD

PROJECT ADDRESS:
920 SW SAINT LUCIE BLVD, PORT ST.LUCIE, FL 34986

STORE #:	81616
PROJECT #:	101357-001
ISSUE DATE:	07-08-2025
DESIGN MANAGER:	ASHLEY SUEIRAS
PRODUCTION DESIGNER:	GENSLER
CHECKED BY:	GENSLER

Revision Schedule

Rev	Date	By	Description

SHEET TITLE:
DIMENS. REFLECTED CEILING PLAN
SCALE: AS SHOWN

SHEET NUMBER:
I103.1

FLOOR TREATMENT SCHEDULE - "T"					
DESIGN ID	AREA	DESCRIPTION	FURN. BY	INST. BY	COMMENTS
X0306	72 SF	MATTER BOLON GRAPHIC HERRINGBONE CINNAMON	SB	GC	VENDOR: RICHARD HUSTY RHUSTY@MATTERSURFACES.COM 404-710-7357 MATTERSURFACES.COM. SIZE: 9X8FT
PLASTIC					
19795	1105 SF	POLYVINYL FLOOR TILE - ECO-GRIP - PEWTER	GC	GC	GC TO PROCURE FROM ALLIED INDUSTRIES
TILE					
20230	922 SF	TILE - I COCCI - GRAPHITE - 24X24IN 600X600MM	SB	GC	GROUT: MAPEI - 47 CHARCOAL, OR EQUAL
WALK OFF MAT					
19288	36 SF	WALK OFF MAT - HELIX Z1 - BLACK - 12X9IN 305X230MM	SB	GC	PAINT CONCRETE FLOOR UNDER WALK-OFF MAT WITH BLACK.

WALL BASE SCHEDULE - "B"					
DESIGN ID	LENGTH	DESCRIPTION	FURN. BY	INST. BY	COMMENTS
METAL BASE					
X1301	89' - 9"	METAL BASE - BLACK MT0028 - 6IN 150MM	SB	GC	W/ SANITARY 1/2IN COVE BEND 45-DEGREE. PROVIDED BY CASEWORK VENDOR FOR ENGINE & BANQUETTE VENDOR FOR BANQUETTE.
PLASTIC BASE					
19795	267' - 1 1/4"	POLYVINYL FLOOR TILE - ECOGRIP - PEWTER	GC	GC	
TRANSITION BASE					
X1300	52' - 2 3/4"	SCHLUTER - DILEX - AHK 100 ATGB	GC	GC	FINISH: DARK ANTHRACITE. W/ SANITARY 3/8IN COVE BASE MOLDING. SCHLUTER SYSTEM WILL REQUIRE USE OF 90 DEGREE CORNER PIECE TO ACCOMODATE FOR RADIUS TRIM PROFILE.
X1302	67' - 10 3/4"	TAPERED ALUMINIUM FRAME - 16 GA	GC	GC	FINISH: DARK ANTHRACITE

LEGEND

- WALK OFF MAT - HELIX Z1 - BLACK - 12X9IN 305X230MM — T 19288
- POLYVINYL FLOOR - ECOGRIP - PEWTER - 60X96IN 1524X2438MM — T 19795
- TILE - I COCCI - CEMENTO - 24X24IN 600X600MM — T 20228
- CONCRETE - POLISHED — T 11377
- RECESSED CARPET - MATTER BOLON GRAPHIC CINNAMON — T X0306
- (A) METAL BASE - POWERCOATED FLAT BLACK - MT0028 - 6IN 150MM — B X1301
- (B) POLYVINYL FLOOR - ECOGRIP - PEWTER - 60X96IN 1524X2438MM — B 19795
- (C) SCHLUTER COVE BASE - DILEX - AHK — B X1300
- DATUM POINT
- FLOOR DRAIN
- FLOOR CLEAN-OUT
- FLOOR SINK

KEYED NOTES

01 PROPOSED LOCATION OF CASEWORK DIEWALL. GC TO COORDINATE WITH CASEWORK VENDOR FOR LOCATION ON SITE.
02 OUTLINE OF ENGINE FOR REFERENCE.
03 OUTLINE OF BANQUETTE SEATING FOR REFERENCE.
04 RECESSED WALK-OFF MAT AT ENTRY. CUT OUT CONCRETE AS REQUIRED PER MANUFACTURER'S SPECIFICATIONS. SEE INTERIOR DETAIL SHEETS FOR TRANSITION.
05 DUPLEX FLOOR OUTLET. COORDINATE FLOOR RECEPTACLE.
06 TILE START POINT WHERE INDICATED IN PLAN.
07 MOP SINK LOCATION. DO NOT CONTINUE WALL BASE IN FRONT OF MOP SINK. SEE PLUMBING PLANS FOR MORE INFORMATION.
08 INSTALL I COCCI CEMENTO TILE FLOORING AT CAFE, RESTROOM VESTIBULE AND RESTROOMS AS INDICATED.
09 INSTALL CUSTOM METAL ALUMINUM TRIM AROUND WALK-OFF MAT AND RECESSED CARPET AS INDICATED IN PLAN AND DETAIL.
10 INSTALL POLYVINYL FLOORING AND BASE AT BACKBAR, AND WORKROOM.
11 POLYVINYL START POINT WHERE INDICATED.
12 INSTALL TILE BASE AT CAFE, RESTROOM VESTIBULE, MGR'S AND PARTNER'S AREA AS INDICATED IN PLAN.
13 INSTALL SCHLUTER BASE AT RESTROOMS AS INDICATED IN PLAN AND DETAIL.
14 POLYVYNIL FLOOR ECO-GRIP TO ALIGN WITH TILE AT FRONT COUNTER.
15 RECESSED CARPET. LEVEL FLOOR IN ORDER TO HAVE CARPET AND TILE ALIGNED.

GENERAL NOTES

A. WORKROOM TO BE FINISHED PER LOCAL CODE REQUIREMENTS.

B. FLOORS, WALLS AND CEILING FINISHES IN FOOD PREPARATION AREAS SHALL BE SMOOTH, NON-TOXIC, NON-ABSORBENT, DURABLE AND EASILY CLEANABLE. PAINT SHALL BE WASHABLE; SEMI-GLOSS OR HIGH-GLOSS FINISH.

C. STARBUCKS TO SUPPLY FLOORING AND BASE FOR FRONT AND BACK OF HOUSE AS NOTED IN SCHEDULES. GENERAL CONTRACTOR TO INSTALL. GENERAL CONTRACTOR TO SUPPLY WORKROOM TILE AND BASE AND INSTALL. GENERAL CONTRACTOR TO SUPPLY AND INSTALL MORTAR, ADHESIVE, AND GROUT. GENERAL CONTRACTOR TO INSPECT ALL TILES AND REJECT DAMAGED OR SUBSTANDARD TILES PRIOR TO INSTALLATION.

D. ALIGN TILE TRANSITIONS ON WHOLE TILES AS SHOWN.

E. ALL FLOOR AND WALL JUNCTIONS IN STORAGE AND FOOD PREPARATION AREAS SHALL HAVE A 6" COVED BASE.

F. SEE BUILDING FLOOR PENETRATION PLAN ON SHEET A102 AND PLUMBING FOR ADDITIONAL INFORMATION.

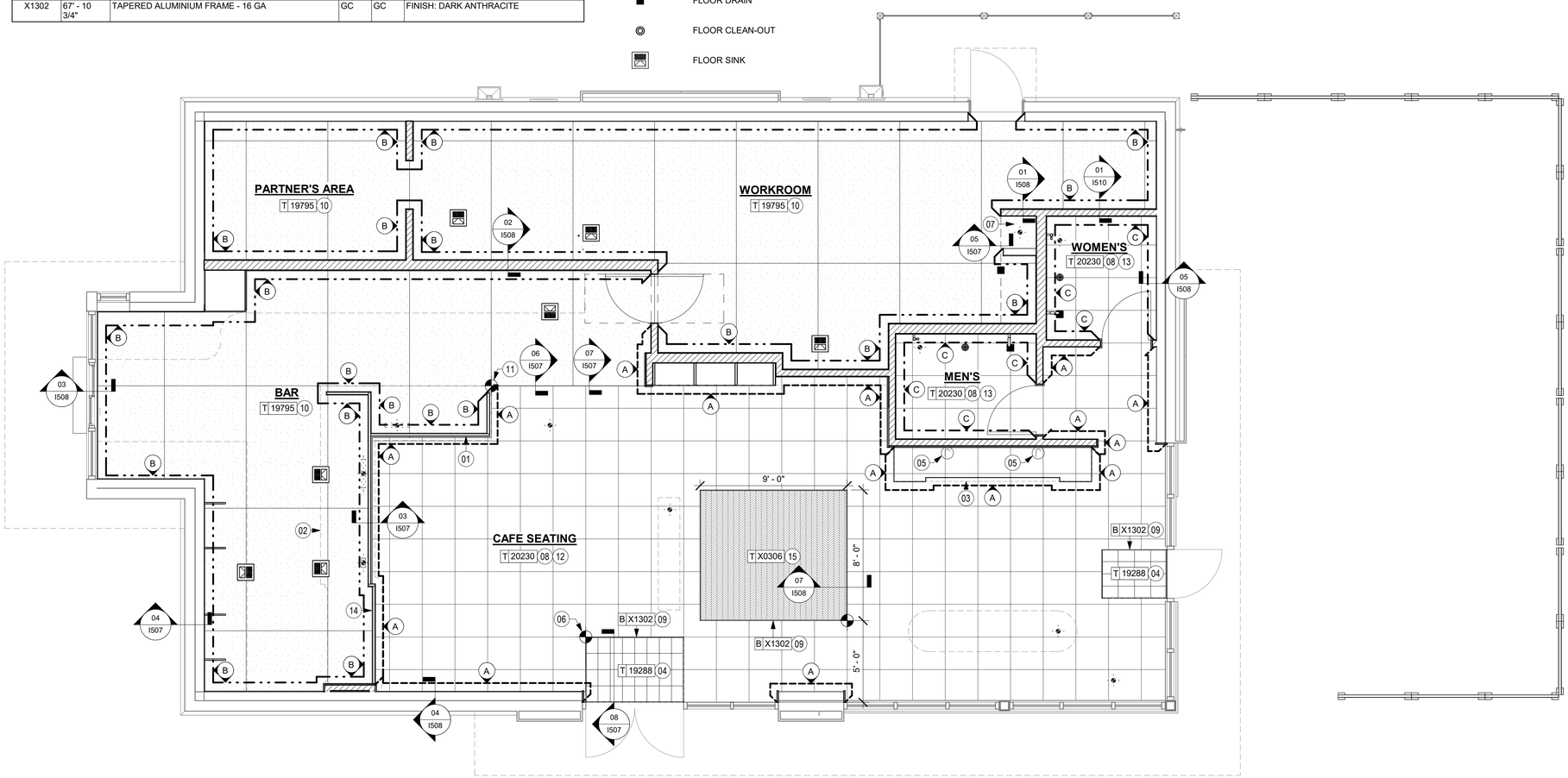

01 FLOOR FINISH PLAN
Scale: 1/4" = 1'-0"

N

PERMIT SET - FOR CONSTRUCTION USE

© 2022 STARBUCKS COFFEE COMPANY

STARBUCKS®
2401 UTAH AVENUE SOUTH
SEATTLE, WASHINGTON 98134
(206) 318-1575

THESE DRAWINGS AND THE PROJECT MANUAL ARE CONFIDENTIAL AND SHALL REMAIN THE SOLE PROPERTY OF STARBUCKS CORPORATION, WHICH IS THE OWNER OF THE COPYRIGHT IN THIS WORK. THEY SHALL NOT BE REPRODUCED (IN WHOLE OR IN PART), SHARED WITH THIRD PARTIES OR USED IN ANY MANNER ON OTHER PROJECTS OR EXTENSIONS TO THIS PROJECT WITHOUT THE PRIOR WRITTEN CONSENT OF STARBUCKS CORPORATION. THESE DRAWINGS AND SPECIFICATIONS ARE INTENDED TO EXPRESS DESIGN INTENT FOR A PROTOTYPICAL STARBUCKS STORE (WHICH IS SUBJECT TO CHANGE AT ANYTIME) AND DO NOT REFLECT ACTUAL SITE CONDITIONS. NEITHER PARTY SHALL HAVE ANY OBLIGATION NOR LIABILITY TO THE OTHER (EXCEPT STATED ABOVE) UNTIL A WRITTEN AGREEMENT IS FULLY EXECUTED BY BOTH PARTIES.

STARBUCKS TEMPLATE VERSION: i2023.04.24

PABLO GARCIA, AIA, REG. FL NO. AR99297

Gensler
MAIN OFFICE
M. ARTHUR GENSLER JR. & ASSOCIATES
220 MONTGOMERY STREET, SUITE 200
SAN FRANCISCO, CA 94104 USA
Tel (415) 433.3700
Fax (415) 836.4599

SATELLITE OFFICE
M. ARTHUR GENSLER JR. & ASSOCIATES
FL QUALIFIER'S LIC. NO. AR96486
545 NW 26TH ST
SUITE 250
MIAMI, FL 33127 USA
Tel (305) 350.7070
Fax (305) 350.7071

PROJECT NAME:
ST LUCIE WEST & SW
CASHEMERE BLVD

PROJECT ADDRESS:
920 SW SAINT LUCIE BLVD, PORT ST.LUCIE, FL 34986

STORE #:	81616
PROJECT #:	101357-001
ISSUE DATE:	07-08-2025
DESIGN MANAGER:	ASHLEY SUEIRAS
PRODUCTION DESIGNER:	GENSLER
CHECKED BY:	GENSLER

Revision Schedule

Rev	Date	By	Description

SHEET TITLE:
FLOOR FINISH PLAN

SCALE: AS SHOWN

SHEET NUMBER:
I104

WALL TREATMENT (AREA) SCHEDULE - "Q"

DESIGN ID	AREA	DESCRIPTION	FURN. BY	INST. BY	COMMENTS
OTHER					
X1100	26 SF	GWB WITH LEVEL 4 FINISH - PAINT AS SCHEDULED.	GC	GC	FINISH: SW7031 MEGA GREIGE AT RESTROOMS & SW9090 CARAIBE AT CAFE.
TILE					
20229	520 SF	TILE - I COCCI - GRAPHITE - 6X24IN 150X600MM	SB	GC	GROUT: MAPEI - 47 CHARCOAL, OR EQUAL
24599	637 SF	TILE - FLATIRON - OLIVIA - GLOSS - 2.5X9.5IN	SB	GC	MAPEI 5007-CHOCOLATE
WALL COVERING					
23764	1440 SF	POLYWALL WALL COVERING - MATTE WHITE	GC	GC	
23815	595 SF	WALL COVERING - FOILED - CAVERN CLAY - TYPE II	SB	GC	A PREMIUM QUALITY PREMIXED FULL STRENGTH COMMERCIAL WALLCOVERING ADHESIVE SHOULD BE APPLIED ONLY TO THE FABRIC SIDE OF THE WALL COVERING. ECO-788 CLAY ADHESIVE OR ECO-888 CLEAR ADHESIVE BY ROMAN IS RECOMMENDED. WALLCOVERING REQUIRES THE USE OF A HEAVY DUTY, PREMIXED VINYL ADHESIVE. DILUTION OF ADHESIVE IS NOT RECOMMENDED. TO BE PROVIDED BY GC.
X1401	250 SF	WALL COVERING - CAMBRIAN - SLATE	SB	GC	PROVIDER: MOMENTUM TEXTILES LLC.

PAINT SCHEDULE

DESIGN ID	COLOR	DESCRIPTION	LRV	FURN. BY	INST. BY	COMMENTS
20438	SW7020	SW7020 BLACK FOX, OR EQUIVALENT	8	GC	GC	SW USE PRIMER CP-1; NCS - S 7502-Y; AKZO NOBEL - 30YY 10/038
20441	SW7031	SW7031 MEGA GREIGE, OR EQUIVALENT	37	GC	GC	SW USE PRIMER CP-1; NCS - S 3005-Y50R; AKZO NOBEL - 20YY 37/094
X0305	<varies>	PLASTIC - BLACK HDPE	13	GC	GC	SW USE PRIMER CP-1

LEGEND

- EXISTING WALL TO REMAIN
- NEW FULL HEIGHT WALL
- C X0008 / WD0077 — 1 — WOOD CLADDING TO CEILING
- C X0008 / WD0035 — 2 — WOOD CLADDING TO CEILING
- Q 23815 — 3 — WALL COVERING TO CEILING
- Q 23764 / Q 24599 — 4 — FRP PANELING TO 2'-10" AFF WALL TILE TO CEILING
- Q 24599 — 5 — WALL TILE TO CEILING
- Q 23764 — 6 — FRP PANELING
- Q 23815 — 7 — WALL COVERING TO CEILING
- Q 20229 — 8 — WALL TILE TO CEILING
- P 1 X0305 — 9 — PAINT TO CEILING
- INDICATES APPLY WALL FINISH ABOVE THE DOOR SILL AS INDICATED. REFER TO ELEVATIONS.
- Q X1401 — 10 — WALL COVERING TO CEILING
- P 1 20438 — 11 — PAINT TO CEILING

SEE INTERIOR FINISH ELEVATIONS FOR TAGGED LOCATION OF WALL FINISH MATERIAL

LEGEND

- INDICATES STAINLESS STEEL (SST) COUNTERTOP
- INDICATES SOLID SURFACE (SS) COUNTERTOP
- DATUM POINT
- INDICATES CORNER GUARD FOR BOH. INSTALL 6" (150MM) TO 42" (1065MM) A.F.F. UNLESS OTHERWISE NOTED. — C 10829
- INDICATES CORNER GUARD. FULL HEIGHT. — C X0021
- INDICATES FRY REGLET Y TRIM (1/4" POST OUTSIDE CORNER) FOR WOOD CLADDING — C X0022
- INDICATES SCHLUTER FINEC-SQ TRIM 3/16", FINISH: MATTE BLACK TEXTURED COLOR-COATED ALUMINUM. — C X0023

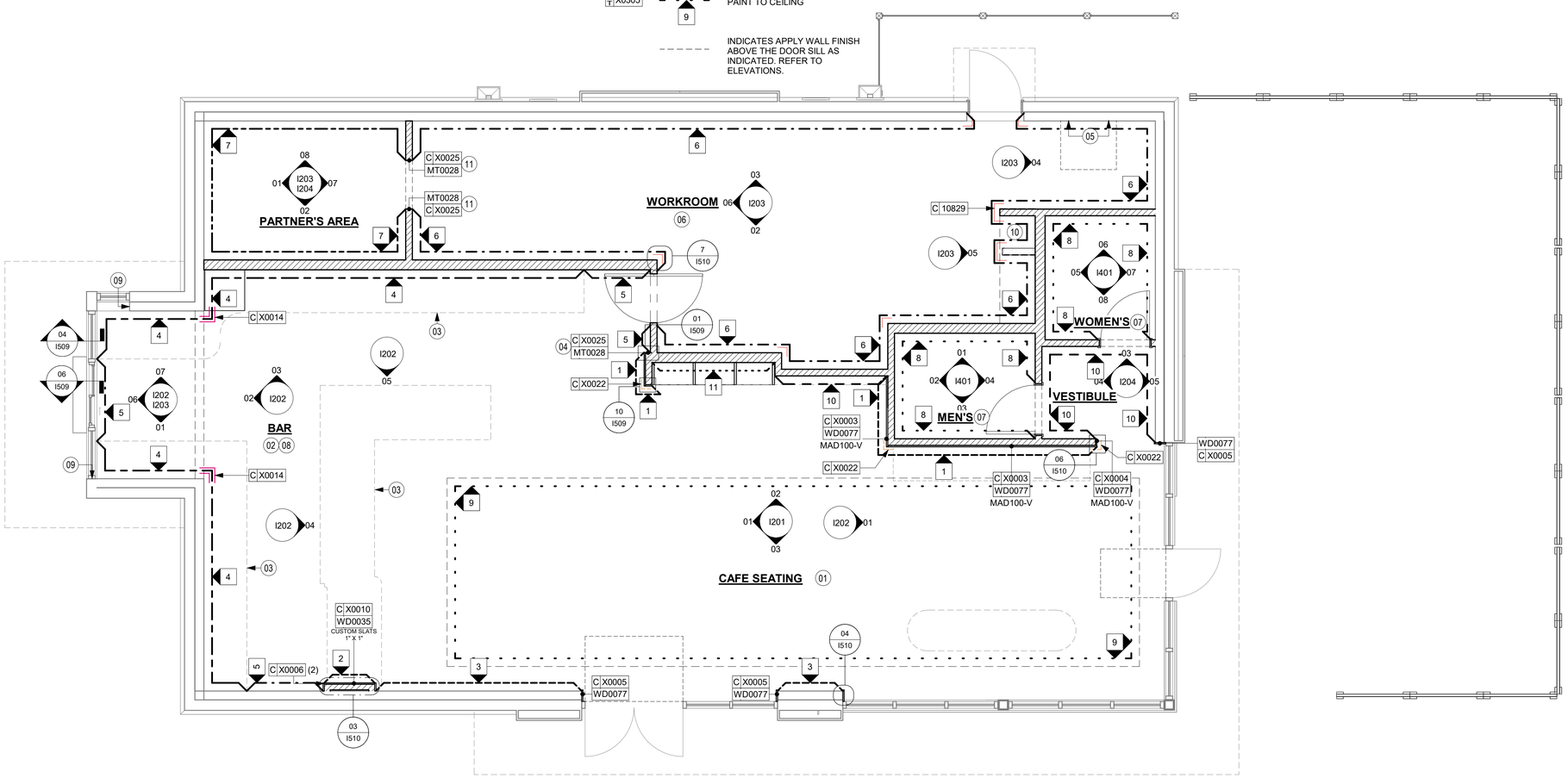

01 WALL FINISH PLAN
Scale: 1/4" = 1'-0"

KEYED NOTES

01 REFER TO INTERIOR ELEVATIONS FOR PAINT COLORS AND TRANSITIONS.
02 GC TO FURNISH AND INSTALL FRP BELOW ENGINE EXPOSED WALLS, EXCEPT AT WARMING WALL. EXTEND FROM WALL BASE TO UNDERSIDE OF COUNTERTOP, SEAL AT BASE. WALL TILE TO START ABOVE THE BACKSPLASH. REFER TO INTERIOR ELEVATIONS FOR ADDITIONAL INFORMATION AND START POINTS.
03 OUTLINE OF ENGINE FOR REFERENCE.
04 DECORATIVE METAL TRIM. REFER TO I102.
05 RECESSED ELECTRICAL PANELS BY LL.
06 INSTALL FULL HEIGHT POLYWALL AT WORKROOM AND STORAGE WALLS AS INDICATED.
07 INSTALL WALL TILE AT RESTROOMS AS INDICATED.
08 GC TO INSTALL BACKBAR WALL TILE AS INDICATED ON INTERIOR FINISH ELEVATIONS.
09 BACKBAR TILE TO RETURN TO MULLIONS WITHIN DRIVE-THRU WINDOW OPENING AS INDICATED.
10 MOP SINK. FULL HEIGHT FRP AT ENCLOSURE (SEE PLUMBING PLANS FOR MORE INFORMATION).
11 METAL MILLWORK TRANSITION. REFER TO I102.

GENERAL NOTES

A. GC TO PATCH AND REPAIR ANY DAMAGE TO EXISTING WALLS TO A SMOOTH, PAINT READY SURFACE PRIOR TO PAINTING.

B. CHANGE OF PAINT COLOR ALLOWED ONLY AT INSIDE CORNERS, UNLESS OTHERWISE NOTED.

C. PAINT SUBSTITUTIONS ARE NOT ALLOWED. USE STARBUCKS NATIONAL SHERWIN-WILLIAMS ACCOUNT "COLOR CODE" WHEN ORDERING PAINTS.

D. REFER TO INTERIOR ELEVATIONS FOR PAINT COLORS AND GRAPHICS' LOCATIONS.

E. WALL AND CEILING COVERING MATERIALS SHALL BE ATTACHED SO THAT THEY ARE EASILY CLEANABLE.

F. MATERIALS FOR INDOOR WALL SURFACES FOR CONDITIONS OF NORMAL USE SHALL BE SMOOTH, DURABLE, AND EASILY CLEANABLE.

G. GC TO PROVIDE AND INSTALL WORKROOM WALL FINISHES PER LOCAL CODE REQUIREMENTS.

H. FLOORS, WALLS AND CEILING FINISHES IN FOOD PREPARATION AREAS SHALL BE SMOOTH, NON-TOXIC, NON-ABSORBENT, DURABLE AND EASILY CLEANABLE.

I. PAINT SHALL BE WASHABLE; SEMI-GLOSS OR HIGH-GLOSS FINISH.

J. PAINT FINISHES SHALL BE APPLIED AS FOLLOWS, UNLESS NOTED OTHERWISE:

1. WOODS AND METAL SURFACES SHALL BE SEMI-GLOSS OR EQUAL.
2. ACCENT AND TRIM PAINTS TO BE SEMI-GLOSS OR EQUAL.
3. WALL AND CEILING PAINTS TO BE EGGSHELL OR EQUAL.
4. PAINTS IN BOH, RESTROOM(S) OR CAFE BAR SHALL BE SEMI-GLOSS OR EQUAL.

K. ALL WOOD SURFACES (DOORS, TRIM, SHELVES, CABINETRY) SHALL BE SEALED.

L. REFER TO CASEWORK FINISH SCHEDULE FOR CASEWORK FINISH MATERIAL INFORMATION.

M. REFER TO INTERIOR FINISH ELEVATIONS FOR ARTWORK/ GRAPHICS LOCATIONS. REFER TO MANUFACTURER'S INSTRUCTIONS INCLUDED WITH ARTWORK/GRAPHICS FOR PROPER INSTALLATION.

N. ALL FLOOR AND WALL JUNCTIONS IN STORAGE AND FOOD PREPARATION AREAS SHALL HAVE 6" COVED BASE.

O. INSTALL BLOCKING AND HANGERS FOR WALL SHELVING BEFORE INSTALLING BACK BAR TILE.

P. CV SHOULD PROVIDE WOOD CLEAR SHERWIN WILLIAMS "CLASS A VARNISH SYSTEM" FLAMES SPREAD RETARDANT FOR ALL WOOD ITEMS OR "CLASS A" EQUIVALENT. APPLY PER MFR'S RECOMMENDATIONS ON ALL SIDES OF PANELS PRIOR TO SEALER. GC TO TEST PRIOR TO INSTALLATION.

Q. PROVIDE FIRE TREATED BLOCKING AS REQUIRED TO SUPPORT WALL ATTACHMENTS (SEE BUILDING FLOOR PLAN ON SHEET A-101 FOR MORE INFORMATION).

R. REFER TO SHEET I-502 FOR WALL FINISH DETAILS.

PERMIT SET - FOR CONSTRUCTION USE

© 2022 STARBUCKS COFFEE COMPANY

STARBUCKS®
2401 UTAH AVENUE SOUTH
SEATTLE, WASHINGTON 98134
(206) 318-1575

THESE DRAWINGS AND THE PROJECT MANUAL ARE CONFIDENTIAL AND SHALL REMAIN THE SOLE PROPERTY OF STARBUCKS CORPORATION, WHICH IS THE OWNER OF THE COPYRIGHT IN THIS WORK. THEY SHALL NOT BE REPRODUCED (IN WHOLE OR IN PART), SHARED WITH THIRD PARTIES OR USED IN ANY MANNER ON OTHER PROJECTS OR EXTENSIONS TO THIS PROJECT WITHOUT THE PRIOR WRITTEN CONSENT OF STARBUCKS CORPORATION. THESE DRAWINGS AND SPECIFICATIONS ARE INTENDED TO EXPRESS DESIGN INTENT FOR A PROTOTYPICAL STARBUCKS STORE (WHICH IS SUBJECT TO CHANGE AT ANYTIME) AND DO NOT REFLECT ACTUAL SITE CONDITIONS. NEITHER PARTY SHALL HAVE ANY OBLIGATION NOR LIABILITY TO THE OTHER (EXCEPT STATED ABOVE) UNTIL A WRITTEN AGREEMENT IS FULLY EXECUTED BY BOTH PARTIES.

STARBUCKS TEMPLATE VERSION: i2023.04.24

PABLO GARCIA, AIA, REG. FL NO. AR99297

Gensler
MAIN OFFICE
M. ARTHUR GENSLER JR. & ASSOCIATES
220 MONTGOMERY STREET, SUITE 200
SAN FRANCISCO, CA 94104 USA
Tel (415) 433.3700
Fax (415) 836.4599

SATELLITE OFFICE
M. ARTHUR GENSLER JR. & ASSOCIATES
FL QUALIFIERS LIC. NO. AR96486
545 NW 26TH ST
SUITE 250
MIAMI, FL 33127 USA
Tel (305) 350.7070
Fax (305) 350.7071

PROJECT NAME:
ST LUCIE WEST & SW CASHEMERE BLVD

PROJECT ADDRESS:
920 SW SAINT LUCIE BLVD, PORT ST.LUCIE, FL 34986

STORE #:	81616
PROJECT #:	101357-001
ISSUE DATE:	07-08-2025
DESIGN MANAGER:	ASHLEY SUEIRAS
PRODUCTION DESIGNER:	GENSLER
CHECKED BY:	GENSLER

Revision Schedule

Rev	Date	By	Description

SHEET TITLE:
WALL FINISH PLAN

SCALE: AS SHOWN

SHEET NUMBER:
I105

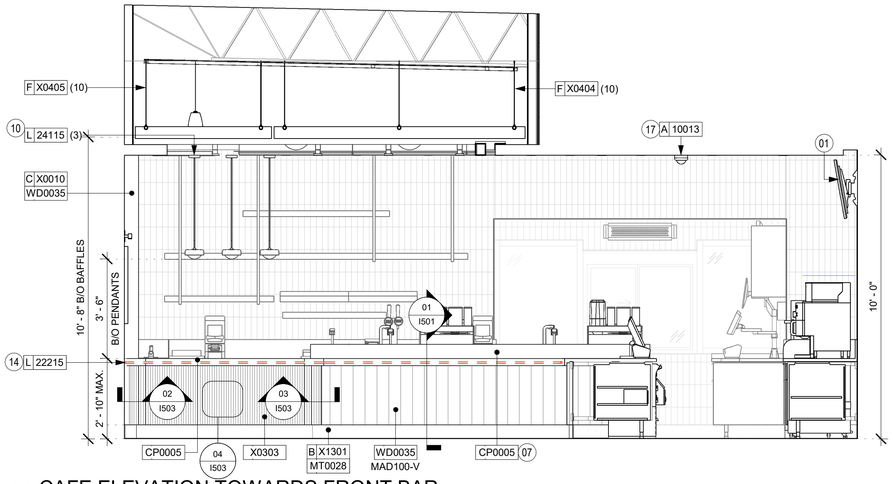

01 CAFE ELEVATION TOWARDS FRONT BAR

Scale: 3/8" = 1'-0"

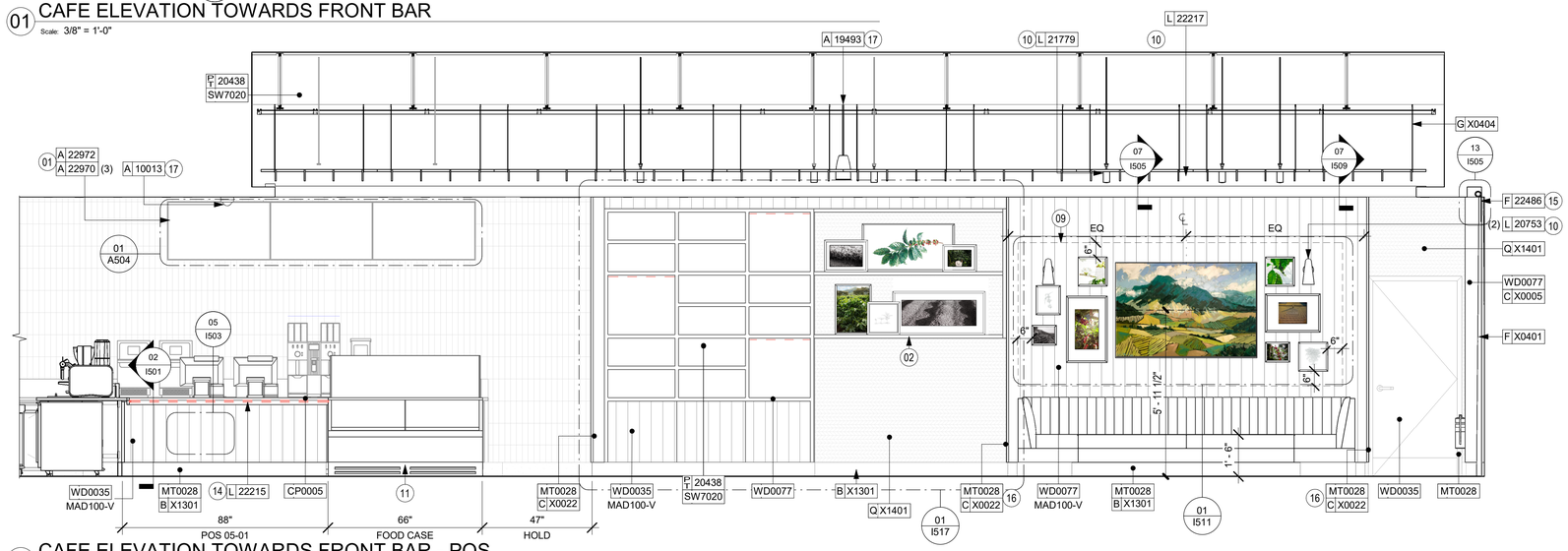

02 CAFE ELEVATION TOWARDS FRONT BAR - POS

Scale: 3/8" = 1'-0"

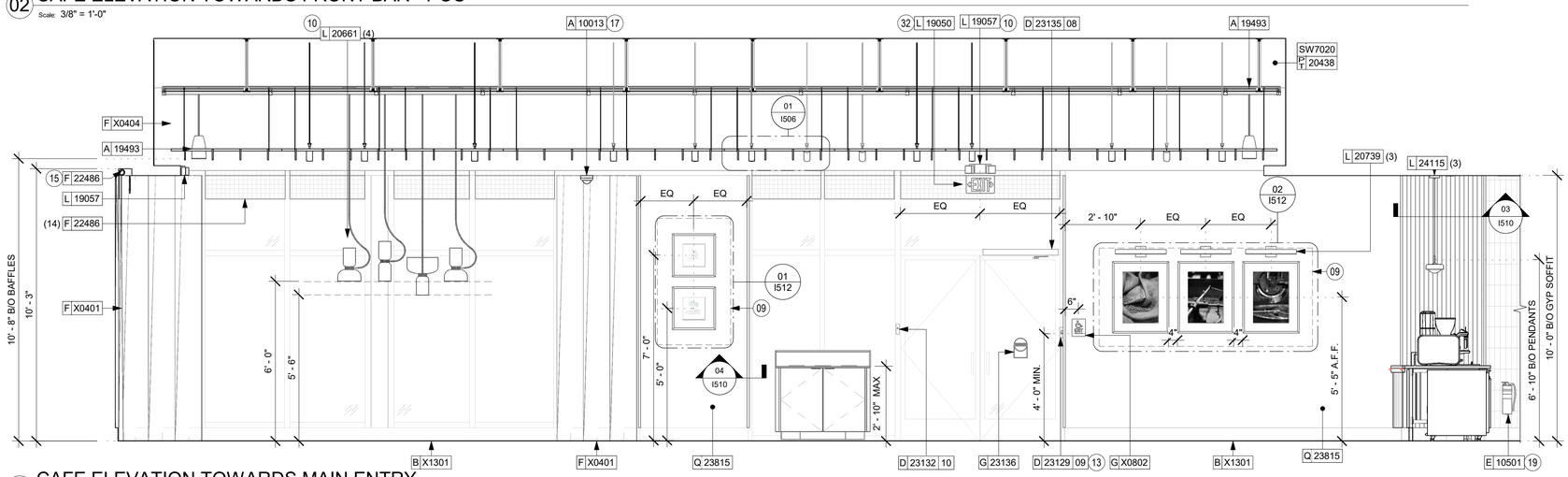

03 CAFE ELEVATION TOWARDS MAIN ENTRY

Scale: 3/8" = 1'-0"

KEYED NOTES

01 ATTACH DIGITAL MENU BOARDS PER INSTALLATION DETAIL.
02 INSTALL SHELVING AS SHOWN. G.C. TO PROVIDE WALL BLOCKING FOR FASTENERS.
07 CORIAN SHROUD.
09 IN-WALL WOOD BLOCKING. VERIFY BLOCKING LOCATION, EXTENTS AND BLOCKING WITH MANUFACTURER'S REQUIREMENTS.
10 LIGHT FIXTURE (SEE REFLECTED CEILING PLAN ON SHEET I103 AND LIGHTING PLAN ON SHEET E102 FOR ADDITIONAL INFORMATION)
11 DO NOT BLOCK FOOD CASE INTAKE/EXHAUST.
13 BARRIER FREE NEW HARDWARE, REFER TO SHEET A602 FOR MORE INFORMATION. GC WILL BE RESPONSIBLE TO SPECIFY, REPAIR THE AREA, INSTALL IT, AND COORDINATE WITH LANDLORD.
14 UNDERCOUNTER LED LIGHTING TO BE INSTALLED AT FRONT BAR AS INDICATED. REFER TO SCHEDULE FOR SPECIFICATIONS AND ELECTRICAL SHEETS FOR ADDITIONAL INFORMATION.
15 ROLLER SHADE TO BE INSTALLED AS SHOWN.
16 INSTALL CORNER GUARD AT OUTSIDE CORNER AS INDICATED. REFER TO DETAIL.
17 INSTALL CEILING MOUNTED SECURITY CAMERA AS INDICATED.
19 PLACE FIRE EXTINGUISHER PER LOCAL FIRE CODE REQUIREMENTS. COORDINATE TYPE AND SIZE WITH LOCAL INSPECTOR.
32 EXIT LIGHT SIGNAGE, REFER TO I103 AND ELECTRICAL SHEETS FOR ADDITIONAL INFORMATION. GC TO VERIFY WITH LOCAL FIRE MARSHALL ON PLACEMENT AND QUANTITIES PRIOR TO INSTALLATION. GC TO PROVIDE BLOCKING.

GENERAL NOTES

A. FOR GRAPHICS SCHEDULE, REFER TO THE FURNITURE, FIXTURES, AND EQUIPMENT (FF & E) SCHEDULES ON SHEET I601.

B. REFER TO MANUFACTURER'S INSTRUCTIONS INCLUDED WITH ARTWORK/GRAPHICS FOR PROPER INSTALLATION.

C. CHANGE PAINT COLOR ONLY AT INSIDE CORNERS UNLESS OTHERWISE INDICATED.

D. PAINT FINISHES SHALL BE APPLIED AS FOLLOWS, UNLESS NOTED OTHERWISE:
   a. WOODS AND METAL SURFACES SHALL BE SEMI-GLOSS OR EQUAL.
   b. ACCENT AND TRIM PAINTS TO BE SEMI-GLOSS OR EQUAL.
   c. WALL AND CEILING PAINTS TO BE EGGSHELL OR EQUAL.
   d. PAINTS IN BOH, RESTROOM(S) OR CAFE BAR SHALL BE SEMI-GLOSS OR EQUAL.

E. PAINT SUBSTITUTIONS ARE NOT ALLOWED. USE STARBUCKS NATIONAL ACCOUNT COLOR CODE WHEN ORDERING PAINTS.

F. FLOORS, WALLS AND CEILING FINISHES IN FOOD PREPARATION AREAS SHALL BE SMOOTH, NON-TOXIC, NON-ABSORBENT, DURABLE AND EASILY CLEANABLE. PAINT SHALL BE WASHABLE; SEMI-GLOSS OR HIGH GLOSS FINISH.

G. ALL WOOD SURFACES (DOORS, TRIM, SHELVES, CABINETRY) SHALL BE SEALED.

H. REFER TO CASEWORK FINISH SCHEDULE ON THE CASEWORK FINISH PLAN ON SHEET I102 FOR CASEWORK FINISH MATERIAL INFORMATION.

I. ALIGN TILE TRANSITIONS ON WHOLE TILES AS SHOWN.

J. ALL FLOOR AND WALL JUNCTIONS IN STORAGE AND FOOD PREPARATION AREAS SHALL HAVE A 6" COVED BASE.

K. ALL FOOD STORAGE SHALL BE 6" (150MM) A.F.F.

L. INSTALL BLOCKING AND HANGERS FOR WALL SHELVING BEFORE INSTALLING BACK BAR TILE.

M. GENERAL CONTRACTOR TO PROVIDE AND INSTALL WORKROOM WALL FINISHES.

N. CLASS A FIRE RETARDANT TREATMENT (PER ASTM E 84), OR PASSES NFPA 286 (DID: SPC006). CASEWORK VENDOR TO PROVIDE WOOD CLEAR SHERWIN WILLIAMS "CLASS A VARNISHSYSTEM" FLAMES SPREAD RETARDANT OR SIMILAR, APPLY PER MFR'S RECOMMENDATIONS ON ALL SIDES OF PANELS PRIOR TO SEALER. GC TO TEST PRIOR TO INSTALLATION.

LEGEND

INDICATES WALL BLOCKING. BLOCKING TO BE PROVIDED AS REQUIRED TO SUPPORT WALL ATTACHMENTS. EXTEND BLOCKING 4" (100mm) BEYOND EDGE OF ATTACHMENTS.

WALL TILE START POINT DATUM

PERMIT SET - FOR CONSTRUCTION USE

© 2022 STARBUCKS COFFEE COMPANY

STARBUCKS®
2401 UTAH AVENUE SOUTH
SEATTLE, WASHINGTON 98134
(206) 318-1575

THESE DRAWINGS AND THE PROJECT MANUAL ARE CONFIDENTIAL AND SHALL REMAIN THE SOLE PROPERTY OF STARBUCKS CORPORATION, WHICH IS THE OWNER OF THE COPYRIGHT IN THIS WORK. THEY SHALL NOT BE REPRODUCED (IN WHOLE OR IN PART), SHARED WITH THIRD PARTIES OR USED IN ANY MANNER ON OTHER PROJECTS OR EXTENSIONS TO THIS PROJECT WITHOUT THE PRIOR WRITTEN CONSENT OF STARBUCKS CORPORATION. THESE DRAWINGS AND SPECIFICATIONS ARE INTENDED TO EXPRESS DESIGN INTENT FOR A PROTOTYPICAL STARBUCKS STORE (WHICH IS SUBJECT TO CHANGE AT ANYTIME) AND DO NOT REFLECT ACTUAL SITE CONDITIONS. NEITHER PARTY SHALL HAVE ANY OBLIGATION NOR LIABILITY TO THE OTHER (EXCEPT STATED ABOVE) UNTIL A WRITTEN AGREEMENT IS FULLY EXECUTED BY BOTH PARTIES.

STARBUCKS TEMPLATE VERSION: i2023.04.24

PABLO GARCIA, AIA, REG. FL NO. AR99297

Gensler

MAIN OFFICE
M. ARTHUR GENSLER JR. & ASSOCIATES
220 MONTGOMERY STREET, SUITE 200
SAN FRANCISCO, CA 94104 USA
Tel (415) 433.3700
Fax (415) 836.4599

SATELLITE OFFICE
M. ARTHUR GENSLER JR. & ASSOCIATES
FL QUALIFIER'S LIC. NO: AR96486
545 NW 26TH ST
SUITE 250
MIAMI, FL 33127 USA
Tel (305) 350.7070
Fax (305) 350.7071

PROJECT NAME:
ST LUCIE WEST & SW CASHEMERE BLVD

PROJECT ADDRESS:
920 SW SAINT LUCIE BLVD, PORT ST.LUCIE, FL 34986

STORE #:	81616
PROJECT #:	101357-001
ISSUE DATE:	07-08-2025
DESIGN MANAGER:	ASHLEY SUEIRAS
PRODUCTION DESIGNER:	GENSLER
CHECKED BY:	GENSLER

Revision Schedule

Rev	Date	By	Description

SHEET TITLE:
INTERIOR FINISH ELEVATIONS
SCALE: AS SHOWN

SHEET NUMBER:
I201

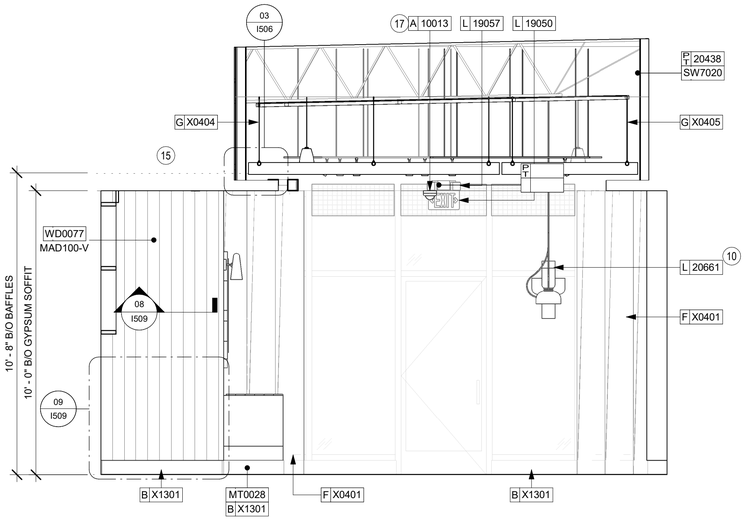

01 CAFE ELEVATION TOWARDS SECONDARY ENTRY
Scale: 3/8" = 1'-0"

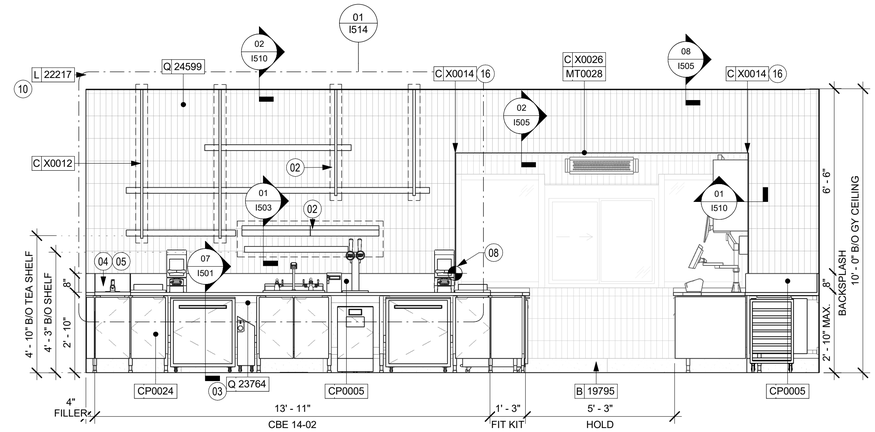

02 ENGINE ELEVATION TOWARDS BACKBAR - CBE
Scale: 3/8" = 1'-0"

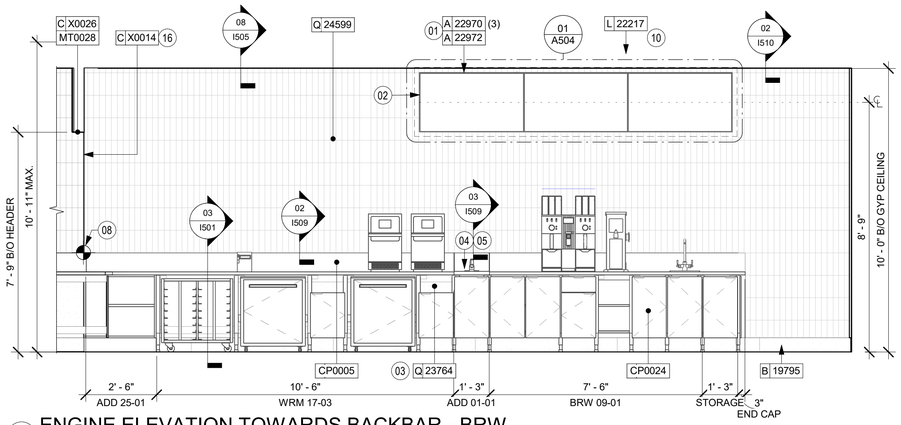

03 ENGINE ELEVATION TOWARDS BACKBAR - BRW
Scale: 3/8" = 1'-0"

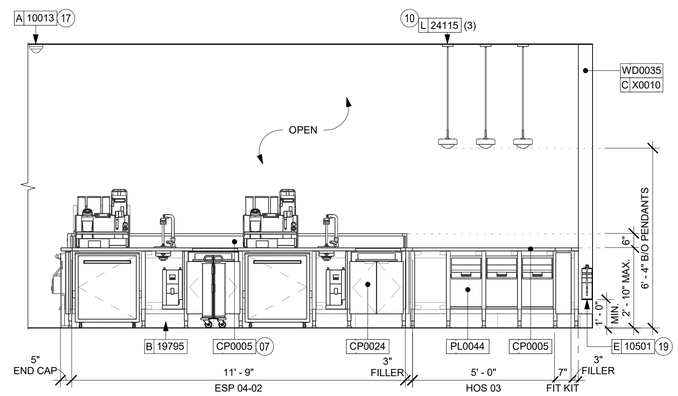

04 ENGINE ELEVATION TOWARDS FRONT BAR - PARTNERS' SIDE
Scale: 3/8" = 1'-0"

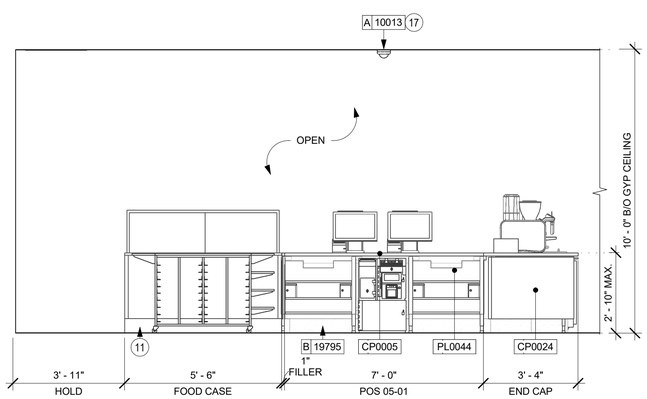

05 ENGINE ELEVATION TOWARDS FRONT BAR - PARTNERS' SIDE POS
Scale: 3/8" = 1'-0"

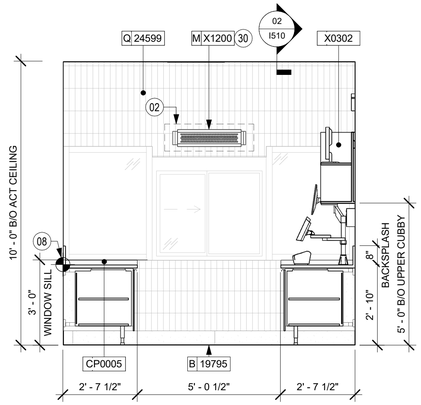

06 DT BUMP AT WINDOW
Scale: 3/8" = 1'-0"

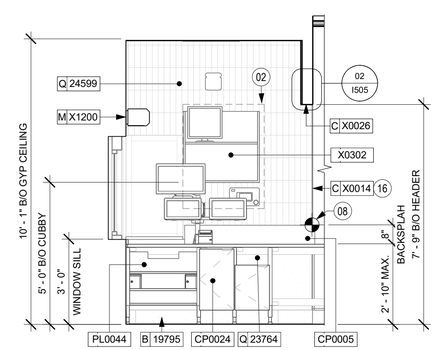

07 DT BUMP AT POS
Scale: 3/8" = 1'-0"

GENERAL NOTES

A. FOR GRAPHICS SCHEDULE, REFER TO THE FURNITURE, FIXTURES, AND EQUIPMENT (FF & E) SCHEDULES ON SHEET I601.

B. REFER TO MANUFACTURER'S INSTRUCTIONS INCLUDED WITH ARTWORK/GRAPHICS FOR PROPER INSTALLATION.

C. CHANGE PAINT COLOR ONLY AT INSIDE CORNERS UNLESS OTHERWISE INDICATED.

D. PAINT FINISHES SHALL BE APPLIED AS FOLLOWS, UNLESS NOTED OTHERWISE:
   a. WOODS AND METAL SURFACES SHALL BE SEMI-GLOSS OR EQUAL.
   b. ACCENT AND TRIM PAINTS TO BE SEMI-GLOSS OR EQUAL.
   c. WALL AND CEILING PAINTS TO BE EGGSHELL OR EQUAL.
   d. PAINTS IN BOH, RESTROOM(S) OR CAFE BAR SHALL BE SEMI-GLOSS OR EQUAL.

E. PAINT SUBSTITUTIONS ARE NOT ALLOWED. USE STARBUCKS NATIONAL ACCOUNT COLOR CODE WHEN ORDERING PAINTS.

F. FLOORS, WALLS AND CEILING FINISHES IN FOOD PREPARATION AREAS SHALL BE SMOOTH, NON-TOXIC, NON-ABSORBENT, DURABLE AND EASILY CLEANABLE. PAINT SHALL BE WASHABLE; SEMI-GLOSS OR HIGH GLOSS FINISH.

G. ALL WOOD SURFACES (DOORS, TRIM, SHELVES, CABINETRY) SHALL BE SEALED.

H. REFER TO CASEWORK FINISH SCHEDULE ON THE CASEWORK FINISH PLAN ON SHEET I102 FOR CASEWORK FINISH MATERIAL INFORMATION.

I. ALIGN TILE TRANSITIONS ON WHOLE TILES AS SHOWN.

J. ALL FLOOR AND WALL JUNCTIONS IN STORAGE AND FOOD PREPARATION AREAS SHALL HAVE A 6" COVED BASE.

K. ALL FOOD STORAGE SHALL BE 6" (150MM) A.F.F.

L. INSTALL BLOCKING AND HANGERS FOR WALL SHELVING BEFORE INSTALLING BACK BAR TILE.

M. GENERAL CONTRACTOR TO PROVIDE AND INSTALL WORKROOM WALL FINISHES.

N. CLASS A FIRE RETARDANT TREATMENT (PER ASTM E 84), OR PASSES NFPA 286 (DID: SPC006). CASEWORK VENDOR TO PROVIDE WOOD CLEAR SHERWIN WILLIAMS "CLASS A VARNISHSYSTEM" FLAMES SPREAD RETARDANT OR SIMILAR, APPLY PER MFR'S RECOMMENDATIONS ON ALL SIDES OF PANELS PRIOR TO SEALER. GC TO TEST PRIOR TO INSTALLATION.

KEYED NOTES

01 ATTACH DIGITAL MENU BOARDS PER INSTALLATION DETAIL.
02 INSTALL SHELVING AS SHOWN. G.C. TO PROVIDE WALL BLOCKING FOR FASTENERS.
03 WALL FINISH BEHIND EXPOSED CABINETRY AND BELOW UNDERSIDE OF COUNTERTOP SUBSTRATE TO BE POLYWALL. EXCEPT WARMING WALL, TILE TO BE EXTEND FROM WALL BASE TO UNDERSIDE OF COUNTERTOP.
04 PROVIDE 8" (150MM) MIN. INTEGRAL SPLASHGUARD AT HAND SINK PER JURISDICTIONAL REQUIREMENTS.
05 HAND SINK WITH SOAP AND PAPER TOWEL DISPENSER. G.C. TO PROVIDE BLOCKING FOR FASTENERS.
07 CORIAN SHROUD.
08 STARTING POINT FOR TILE INSTALLATION. WALL TILE GROUT LINES TO ALIGN AS INDICATED. EXCESS TILE TO BE CUT TO ALIGN.
10 LIGHT FIXTURE (SEE REFLECTED CEILING PLAN ON SHEET I103 AND LIGHTING PLAN ON SHEET E102 FOR ADDITIONAL INFORMATION)
11 DO NOT BLOCK FOOD CASE INTAKE/EXHAUST.
15 ROLLER SHADE TO BE INSTALLED AS SHOWN.
16 INSTALL CORNER GUARD AT OUTSIDE CORNER AS INDICATED. REFER TO DETAIL.
17 INSTALL CEILING MOUNTED SECURITY CAMERA AS INDICATED.
19 PLACE FIRE EXTINGUISHER PER LOCAL FIRE CODE REQUIREMENTS. COORDINATE TYPE AND SIZE WITH LOCAL INSPECTOR.
30 AIR CURTAIN.

LEGEND

INDICATES WALL BLOCKING. BLOCKING TO BE PROVIDED AS REQUIRED TO SUPPORT WALL ATTACHMENTS. EXTEND BLOCKING 4" (100mm) BEYOND EDGE OF ATTACHMENTS.

WALL TILE START POINT DATUM

PERMIT SET - FOR CONSTRUCTION USE

© 2022 STARBUCKS COFFEE COMPANY

STARBUCKS®
2401 UTAH AVENUE SOUTH
SEATTLE, WASHINGTON 98134
(206) 318-1575

THESE DRAWINGS AND THE PROJECT MANUAL ARE CONFIDENTIAL AND SHALL REMAIN THE SOLE PROPERTY OF STARBUCKS CORPORATION, WHICH IS THE OWNER OF THE COPYRIGHT IN THIS WORK. THEY SHALL NOT BE REPRODUCED (IN WHOLE OR IN PART), SHARED WITH THIRD PARTIES OR USED IN ANY MANNER ON OTHER PROJECTS OR EXTENSIONS TO THIS PROJECT WITHOUT THE PRIOR WRITTEN CONSENT OF STARBUCKS CORPORATION. THESE DRAWINGS AND SPECIFICATIONS ARE INTENDED TO EXPRESS DESIGN INTENT FOR A PROTOTYPICAL STARBUCKS STORE (WHICH IS SUBJECT TO CHANGE AT ANYTIME) AND DO NOT REFLECT ACTUAL SITE CONDITIONS. NEITHER PARTY SHALL HAVE ANY OBLIGATION NOR LIABILITY TO THE OTHER (EXCEPT STATED ABOVE) UNTIL A WRITTEN AGREEMENT IS FULLY EXECUTED BY BOTH PARTIES.

STARBUCKS TEMPLATE VERSION: i2023.04.24

PABLO GARCIA, AIA, REG. FL NO. AR99297

Gensler
MAIN OFFICE
M. ARTHUR GENSLER JR. & ASSOCIATES
220 MONTGOMERY STREET, SUITE 200
SAN FRANCISCO, CA 94104 USA
Tel (415) 433.3700
Fax (415) 836.4599

SATELLITE OFFICE
M. ARTHUR GENSLER JR. & ASSOCIATES
FL QUALIFIER'S LIC. NO. AR96486
545 NW 26TH ST
SUITE 250
MIAMI, FL 33127 USA
Tel (305) 350.7070
Fax (305) 350.7071

PROJECT NAME:
ST LUCIE WEST & SW CASHEMERE BLVD

PROJECT ADDRESS:
920 SW SAINT LUCIE BLVD, PORT ST.LUCIE, FL 34986

STORE #:	81616
PROJECT #:	101357-001
ISSUE DATE:	07-08-2025
DESIGN MANAGER:	ASHLEY SUEIRAS
PRODUCTION DESIGNER:	GENSLER
CHECKED BY:	GENSLER

Revision Schedule

Rev	Date	By	Description

SHEET TITLE:
INTERIOR FINISH ELEVATIONS
SCALE: AS SHOWN

SHEET NUMBER:
I202

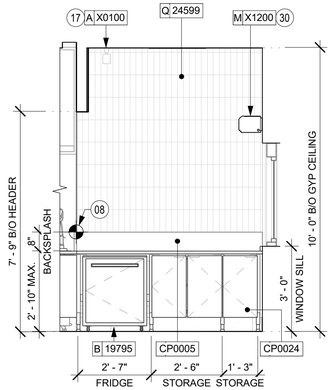

01 DT BUMP AT STORAGE
Scale: 3/8" = 1'-0"

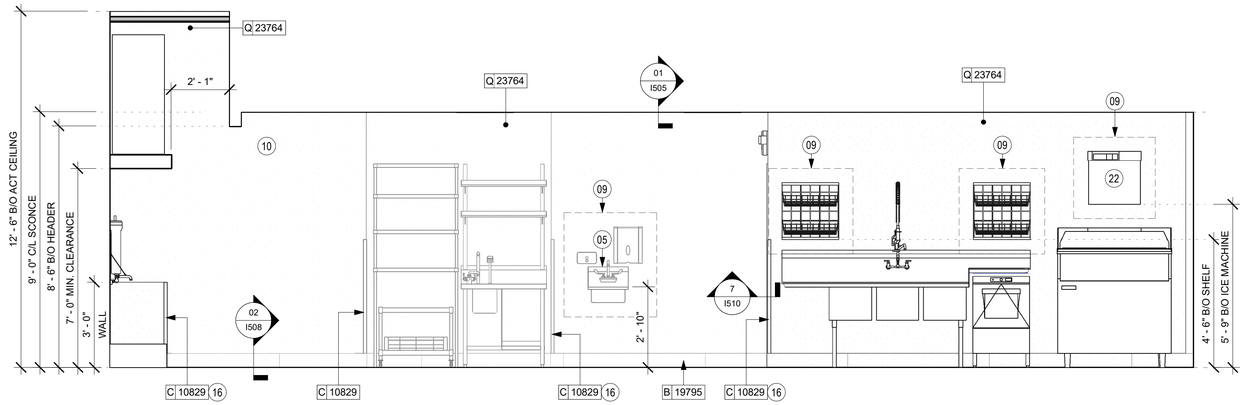

02 BOH AT 3 COMP SINK
Scale: 3/8" = 1'-0"

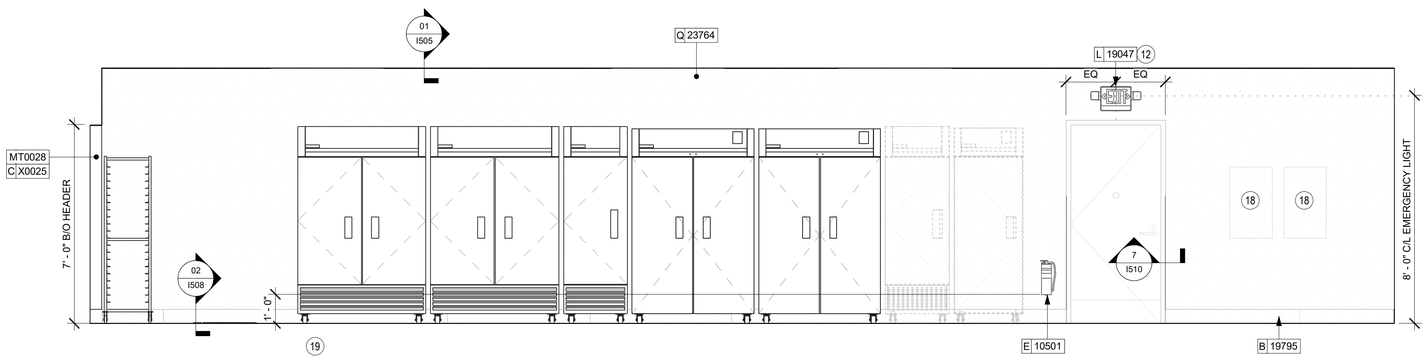

03 BOH AT COLD STORAGE
Scale: 3/8" = 1'-0"

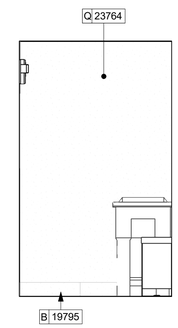

04 BOH AT TRASH
Scale: 3/8" = 1'-0"

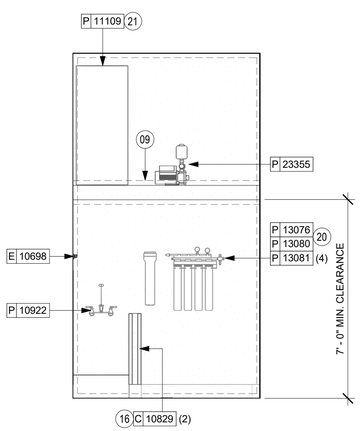

05 BOH AT WATER HEATER
Scale: 3/8" = 1'-0"

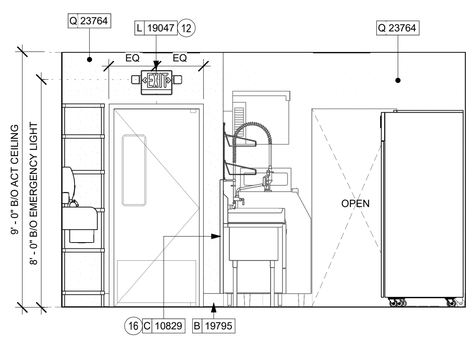

06 BOH AT ENGINE ENTRANCE
Scale: 3/8" = 1'-0"

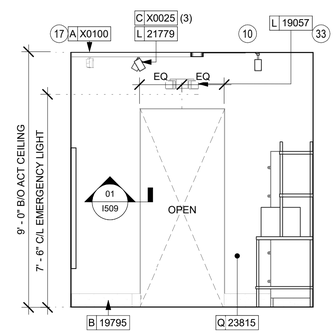

07 PARTNERS' AT BOH ENTRANCE
Scale: 3/8" = 1'-0"

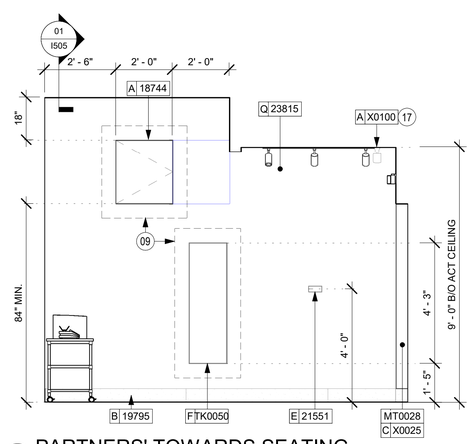

08 PARTNERS' TOWARDS SEATING
Scale: 3/8" = 1'-0"

GENERAL NOTES

A. FOR GRAPHICS SCHEDULE, REFER TO THE FURNITURE, FIXTURES, AND EQUIPMENT (FF & E) SCHEDULES ON SHEET I601.

B. REFER TO MANUFACTURER'S INSTRUCTIONS INCLUDED WITH ARTWORK/GRAPHICS FOR PROPER INSTALLATION.

C. CHANGE PAINT COLOR ONLY AT INSIDE CORNERS UNLESS OTHERWISE INDICATED.

D. PAINT FINISHES SHALL BE APPLIED AS FOLLOWS, UNLESS NOTED OTHERWISE:
   a. WOODS AND METAL SURFACES SHALL BE SEMI-GLOSS OR EQUAL.
   b. ACCENT AND TRIM PAINTS TO BE SEMI-GLOSS OR EQUAL.
   c. WALL AND CEILING PAINTS TO BE EGGSHELL OR EQUAL.
   d. PAINTS IN BOH, RESTROOM(S) OR CAFE BAR SHALL BE SEMI-GLOSS OR EQUAL.

E. PAINT SUBSTITUTIONS ARE NOT ALLOWED. USE STARBUCKS NATIONAL ACCOUNT COLOR CODE WHEN ORDERING PAINTS.

F. FLOORS, WALLS AND CEILING FINISHES IN FOOD PREPARATION AREAS SHALL BE SMOOTH, NON-TOXIC, NON-ABSORBENT, DURABLE AND EASILY CLEANABLE. PAINT SHALL BE WASHABLE; SEMI-GLOSS OR HIGH GLOSS FINISH.

G. ALL WOOD SURFACES (DOORS, TRIM, SHELVES, CABINETRY) SHALL BE SEALED.

H. REFER TO CASEWORK FINISH SCHEDULE ON THE CASEWORK FINISH PLAN ON SHEET I102 FOR CASEWORK FINISH MATERIAL INFORMATION.

I. ALIGN TILE TRANSITIONS ON WHOLE TILES AS SHOWN.

J. ALL FLOOR AND WALL JUNCTIONS IN STORAGE AND FOOD PREPARATION AREAS SHALL HAVE A 6" COVED BASE.

K. ALL FOOD STORAGE SHALL BE 6" (150MM) A.F.F.

L. INSTALL BLOCKING AND HANGERS FOR WALL SHELVING BEFORE INSTALLING BACK BAR TILE.

M. GENERAL CONTRACTOR TO PROVIDE AND INSTALL WORKROOM WALL FINISHES.

N. CLASS A FIRE RETARDANT TREATMENT (PER ASTM E 84), OR PASSES NFPA 286 (DID: SPC006). CASEWORK VENDOR TO PROVIDE WOOD CLEAR SHERWIN WILLIAMS "CLASS A VARNISHSYSTEM" FLAMES SPREAD RETARDANT OR SIMILAR, APPLY PER MFR'S RECOMMENDATIONS ON ALL SIDES OF PANELS PRIOR TO SEALER. GC TO TEST PRIOR TO INSTALLATION.

KEYED NOTES

05 HAND SINK WITH SOAP AND PAPER TOWEL DISPENSER. G.C. TO PROVIDE BLOCKING FOR FASTENERS.

08 STARTING POINT FOR TILE INSTALLATION. WALL TILE GROUT LINES TO ALIGN AS INDICATED. EXCESS TILE TO BE CUT TO ALIGN.

09 IN-WALL WOOD BLOCKING. VERIFY BLOCKING LOCATION, EXTENTS AND BLOCKING WITH MANUFACTURER'S REQUIREMENTS.

10 LIGHT FIXTURE (SEE REFLECTED CEILING PLAN ON SHEET I103 AND LIGHTING PLAN ON SHEET E102 FOR ADDITIONAL INFORMATION)

12 EMERGENCY EXIT/LIGHT SIGNAGE COMBO, CEILING ATTACHMENT. REFER TO I103 AND ELECTRICAL SHEETS FOR ADDITIONAL INFORMATION. GC TO VERIFY WITH LOCAL FIRE MARSHALL ON PLACEMENT AND QUANTITIES PRIOR TO INSTALLATION. GC TO ATTACH AN SUSPENSION KIT.

16 INSTALL CORNER GUARD AT OUTSIDE CORNER AS INDICATED. REFER TO DETAIL.

17 INSTALL CEILING MOUNTED SECURITY CAMERA AS INDICATED.

18 RECESSED ELECTRICAL PANELS (SEE ELECTRICAL DRAWINGS FOR ADDITIONAL INFORMATION).

19 PLACE FIRE EXTINGUISHER PER LOCAL FIRE CODE REQUIREMENTS. COORDINATE TYPE AND SIZE WITH LOCAL INSPECTOR.

20 WATER FILTRATION EQUIPMENT. REFER TO PLUMBING DRAWINGS.

21 WATER HEATER. REFER TO PLUMBING DRAWINGS.

22 ICE MACHINE (SEE PLUMBING AND ELECTRICAL DRAWINGS FOR ADDITIONAL INFORMATION).

30 AIR CURTAIN.

33 EMERGENCY LIGHT , REFER TO I103 AND ELECTRICAL SHEETS FOR ADDITIONAL INFORMATION. GC TO VERIFY WITH LOCAL FIRE MARSHALL ON PLACEMENT AND QUANTITIES PRIOR TO INSTALLATION. GC TO PROVIDE BLOCKING.

PERMIT SET - FOR CONSTRUCTION USE

© 2022 STARBUCKS COFFEE COMPANY

STARBUCKS®
2401 UTAH AVENUE SOUTH
SEATTLE, WASHINGTON 98134
(206) 318-1575

THESE DRAWINGS AND THE PROJECT MANUAL ARE CONFIDENTIAL AND SHALL REMAIN THE SOLE PROPERTY OF STARBUCKS CORPORATION, WHICH IS THE OWNER OF THE COPYRIGHT IN THIS WORK. THEY SHALL NOT BE REPRODUCED (IN WHOLE OR IN PART), SHARED WITH THIRD PARTIES OR USED IN ANY MANNER ON OTHER PROJECTS OR EXTENSIONS TO THIS PROJECT WITHOUT THE PRIOR WRITTEN CONSENT OF STARBUCKS CORPORATION. THESE DRAWINGS AND SPECIFICATIONS ARE INTENDED TO EXPRESS DESIGN INTENT FOR A PROTOTYPICAL STARBUCKS STORE (WHICH IS SUBJECT TO CHANGE AT ANYTIME) AND DO NOT REFLECT ACTUAL SITE CONDITIONS. NEITHER PARTY SHALL HAVE ANY OBLIGATION NOR LIABILITY TO THE OTHER (EXCEPT STATED ABOVE) UNTIL A WRITTEN AGREEMENT IS FULLY EXECUTED BY BOTH PARTIES.

STARBUCKS TEMPLATE VERSION: i2023.04.24

PABLO GARCIA, AIA, REG. FL NO. AR99297

Gensler
MAIN OFFICE
M. ARTHUR GENSLER JR. & ASSOCIATES
220 MONTGOMERY STREET, SUITE 200
SAN FRANCISCO, CA 94104 USA
Tel (415) 433.3700
Fax (415) 836.4599

SATELLITE OFFICE
M. ARTHUR GENSLER JR. & ASSOCIATES
FL QUALIFIER'S LIC. NO. AR96486
543 NW 36TH ST
SUITE 250
MIAMI, FL 33127 USA
Tel (305) 350.7070
Fax (305) 350.7071

PROJECT NAME:
ST LUCIE WEST & SW CASHEMERE BLVD

PROJECT ADDRESS:
920 SW SAINT LUCIE BLVD, PORT ST.LUCIE, FL 34986

STORE #:	81616
PROJECT #:	101357-001
ISSUE DATE:	07-08-2025
DESIGN MANAGER:	ASHLEY SUEIRAS
PRODUCTION DESIGNER:	GENSLER
CHECKED BY:	GENSLER

Revision Schedule

Rev	Date	By	Description

SHEET TITLE:
INTERIOR FINISH ELEVATIONS
SCALE: AS SHOWN

SHEET NUMBER:
I203

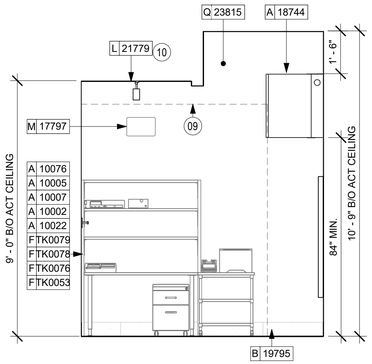

01 PARTNERS' TOWARDS MANAGER'S DESK
Scale: 3/8" = 1'-0"

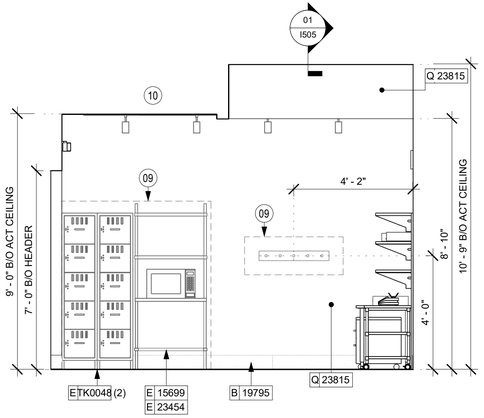

02 PARTNERS' TOWARDS LOCKERS
Scale: 3/8" = 1'-0"

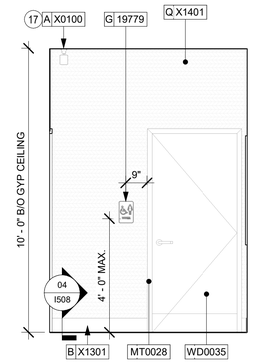

03 VESTIBULE TOWARDS WOMEN'S
Scale: 3/8" = 1'-0"

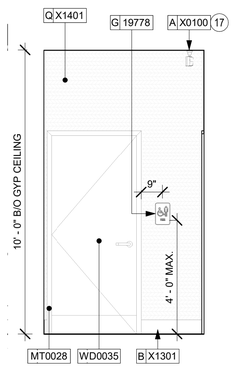

04 VESTIBULE TOWARDS MEN'S
Scale: 3/8" = 1'-0"

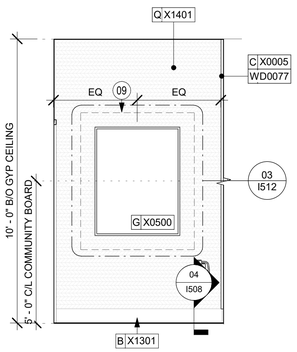

05 VESTIBULE AT COMMUNITY BOARD
Scale: 3/8" = 1'-0"

KEYED NOTES

09 IN-WALL WOOD BLOCKING. VERIFY BLOCKING LOCATION, EXTENTS AND BLOCKING WITH MANUFACTURER'S REQUIREMENTS.

10 LIGHT FIXTURE (SEE REFLECTED CEILING PLAN ON SHEET I103 AND LIGHTING PLAN ON SHEET E102 FOR ADDITIONAL INFORMATION)

17 INSTALL CEILING MOUNTED SECURITY CAMERA AS INDICATED.

GENERAL NOTES

A. FOR GRAPHICS SCHEDULE, REFER TO THE FURNITURE, FIXTURES, AND EQUIPMENT (FF & E) SCHEDULES ON SHEET I601.

B. REFER TO MANUFACTURER'S INSTRUCTIONS INCLUDED WITH ARTWORK/GRAPHICS FOR PROPER INSTALLATION.

C. CHANGE PAINT COLOR ONLY AT INSIDE CORNERS UNLESS OTHERWISE INDICATED.

D. PAINT FINISHES SHALL BE APPLIED AS FOLLOWS, UNLESS NOTED OTHERWISE:
   a. WOODS AND METAL SURFACES SHALL BE SEMI-GLOSS OR EQUAL.
   b. ACCENT AND TRIM PAINTS TO BE SEMI-GLOSS OR EQUAL.
   c. WALL AND CEILING PAINTS TO BE EGGSHELL OR EQUAL.
   d. PAINTS IN BOH, RESTROOM(S) OR CAFE BAR SHALL BE SEMI-GLOSS OR EQUAL.

E. PAINT SUBSTITUTIONS ARE NOT ALLOWED. USE STARBUCKS NATIONAL ACCOUNT COLOR CODE WHEN ORDERING PAINTS.

F. FLOORS, WALLS AND CEILING FINISHES IN FOOD PREPARATION AREAS SHALL BE SMOOTH, NON-TOXIC, NON-ABSORBENT, DURABLE AND EASILY CLEANABLE. PAINT SHALL BE WASHABLE; SEMI-GLOSS OR HIGH GLOSS FINISH.

G. ALL WOOD SURFACES (DOORS, TRIM, SHELVES, CABINETRY) SHALL BE SEALED.

H. REFER TO CASEWORK FINISH SCHEDULE ON THE CASEWORK FINISH PLAN ON SHEET I102 FOR CASEWORK FINISH MATERIAL INFORMATION.

I. ALIGN TILE TRANSITIONS ON WHOLE TILES AS SHOWN.

J. ALL FLOOR AND WALL JUNCTIONS IN STORAGE AND FOOD PREPARATION AREAS SHALL HAVE A 6" COVED BASE.

K. ALL FOOD STORAGE SHALL BE 6" (150MM) A.F.F.

L. INSTALL BLOCKING AND HANGERS FOR WALL SHELVING BEFORE INSTALLING BACK BAR TILE.

M. GENERAL CONTRACTOR TO PROVIDE AND INSTALL WORKROOM WALL FINISHES.

N. CLASS A FIRE RETARDANT TREATMENT (PER ASTM E 84), OR PASSES NFPA 286 (DID: SPC006). CASEWORK VENDOR TO PROVIDE WOOD CLEAR SHERWIN WILLIAMS "CLASS A VARNISHSYSTEM" FLAMES SPREAD RETARDANT OR SIMILAR, APPLY PER MFR'S RECOMMENDATIONS ON ALL SIDES OF PANELS PRIOR TO SEALER. GC TO TEST PRIOR TO INSTALLATION.

PERMIT SET - FOR CONSTRUCTION USE

© 2022 STARBUCKS COFFEE COMPANY

STARBUCKS®
2401 UTAH AVENUE SOUTH
SEATTLE, WASHINGTON 98134
(206) 318-1575

THESE DRAWINGS AND THE PROJECT MANUAL ARE CONFIDENTIAL AND SHALL REMAIN THE SOLE PROPERTY OF STARBUCKS CORPORATION, WHICH IS THE OWNER OF THE COPYRIGHT IN THIS WORK. THEY SHALL NOT BE REPRODUCED (IN WHOLE OR IN PART), SHARED WITH THIRD PARTIES OR USED IN ANY MANNER ON OTHER PROJECTS OR EXTENSIONS TO THIS PROJECT WITHOUT THE PRIOR WRITTEN CONSENT OF STARBUCKS CORPORATION. THESE DRAWINGS AND SPECIFICATIONS ARE INTENDED TO EXPRESS DESIGN INTENT FOR A PROTOTYPICAL STARBUCKS STORE (WHICH IS SUBJECT TO CHANGE AT ANYTIME) AND DO NOT REFLECT ACTUAL SITE CONDITIONS. NEITHER PARTY SHALL HAVE ANY OBLIGATION NOR LIABILITY TO THE OTHER (EXCEPT STATED ABOVE) UNTIL A WRITTEN AGREEMENT IS FULLY EXECUTED BY BOTH PARTIES.

STARBUCKS TEMPLATE VERSION: i2023.04.24

PABLO GARCIA, AIA, REG. FL NO. AR99297

Gensler

MAIN OFFICE
M. ARTHUR GENSLER JR. & ASSOCIATES
220 MONTGOMERY STREET, SUITE 200
SAN FRANCISCO, CA 94104 USA
Tel (415) 433.3700
Fax (415) 836.4599

SATELLITE OFFICE
M. ARTHUR GENSLER JR. & ASSOCIATES
FL QUALIFIER'S LIC. NO: AR96486
545 NW 26TH ST
SUITE 250
MIAMI, FL 33127 USA
Tel (305) 350.7070
Fax (305) 350.7071

PROJECT NAME:
ST LUCIE WEST & SW CASHEMERE BLVD

PROJECT ADDRESS:
920 SW SAINT LUCIE BLVD, PORT ST.LUCIE, FL 34986

STORE #:	81616
PROJECT #:	101357-001
ISSUE DATE:	07-08-2025
DESIGN MANAGER:	ASHLEY SUEIRAS
PRODUCTION DESIGNER:	GENSLER
CHECKED BY:	GENSLER

Revision Schedule

Rev	Date	By	Description

SHEET TITLE:
INTERIOR FINISH ELEVATIONS
SCALE: AS SHOWN

SHEET NUMBER:
I204

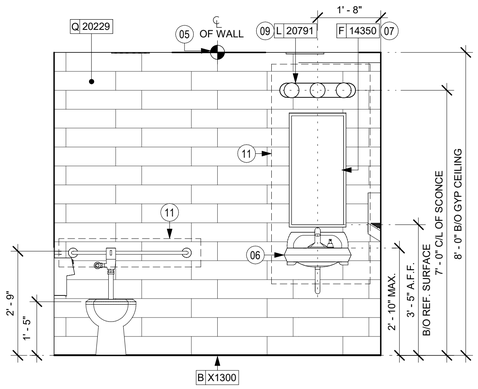

01 MEN'S AT HAND SINK
Scale: 1/2" = 1'-0"

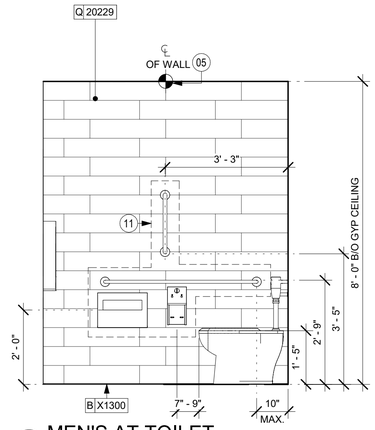

02 MEN'S AT TOILET
Scale: 1/2" = 1'-0"

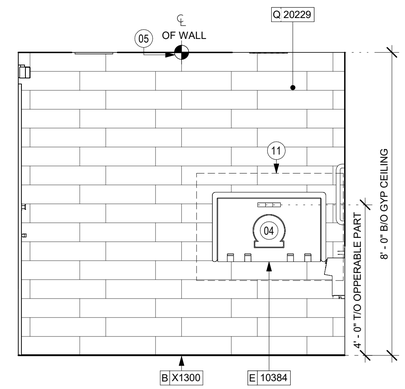

03 MEN'S AT CHANGING STATION
Scale: 1/2" = 1'-0"

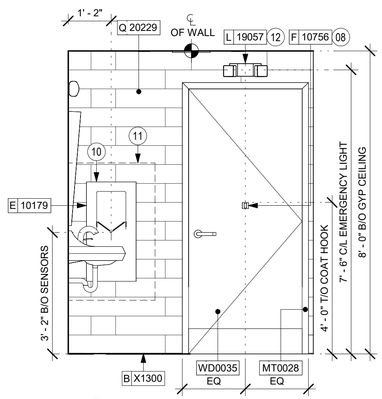

04 MEN'S AT ENTRY
Scale: 1/2" = 1'-0"

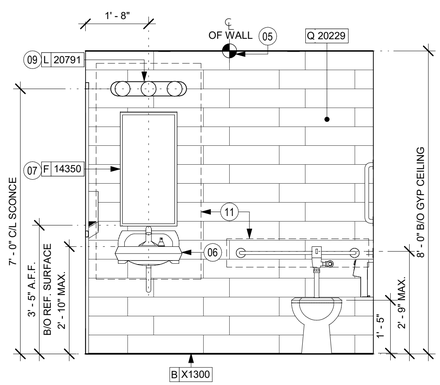

05 WOMEN'S AT HAND SINK
Scale: 1/2" = 1'-0"

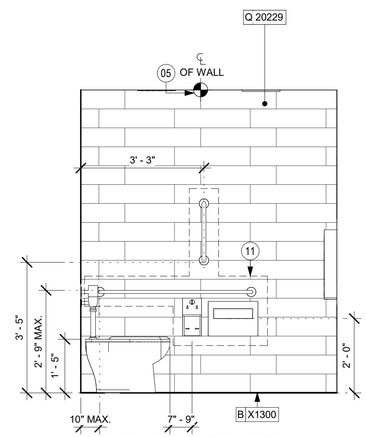

06 WOMEN'S AT TOILET
Scale: 1/2" = 1'-0"

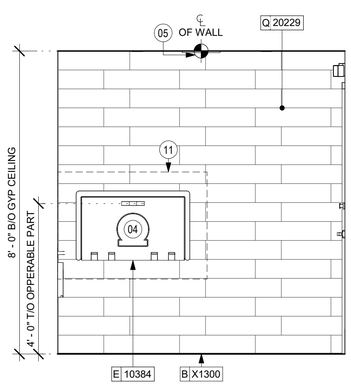

07 WOMEN'S AT CHANGING STATION
Scale: 1/2" = 1'-0"

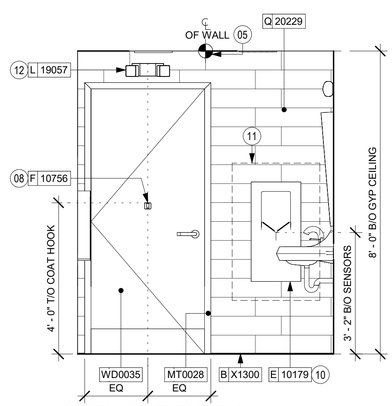

08 WOMEN'S AT ENTRY
Scale: 1/2" = 1'-0"

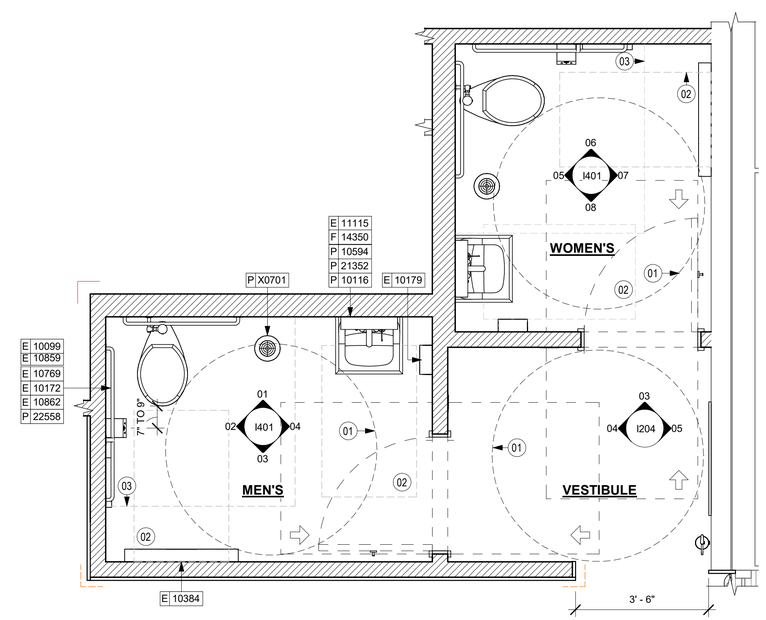

09 ENLARGED PLAN - RESTROOMS
Scale: 1/2" = 1'-0"

KEYED NOTES

01 60" (1525MM) ACCESSIBLE TURNING RADIUS.
02 30" (760MM) X 48" (1220MM) CLEAR FLOOR SPACE.
03 WATER CLOSET CLEAR FLOOR SPACE.
04 BABY CHANGING FIXTURE.
05 TILE START POINT. CENTER FULL TILE ON WALL (HORIZONTALLY).
06 WALL MOUNTED LAVATORY INSTALLED WITH SUPPORT CARRIER AND INSULATED BOOT AT EXPOSED PIPES.
07 CENTER MIRROR OVER LAVATORY. MOUNT AT 40" (1015MM) MAX. TO BOTTOM EDGE OF REFLECTIVE SURFACE.
08 COAT HOOK. MOUNT AT ENTERLINE OF DOOR.
09 CENTER SCONCE LIGHTING OVER MIRROR (SEE ELECTRICAL).
10 INSTALL HAND DRYER WITH BACK PANEL AS INDICATED.
11 IN-WALL WOOD BLOCKING. VERIFY BLOCKING LOCATION, EXTENTS AND BLOCKING WITH MANUFACTURER'S REQUIREMENTS.
12 INSTALL EMERGENCY LIGHT AS INDICATED.

GENERAL NOTES

A. GENERAL CONTRACTOR TO VERIFY ALL DIMENSIONS AND NOTIFY STARBUCKS CONSTRUCTION MANAGER OF ANY DISCREPANCIES PRIOR TO CONSTRUCTION.

B. ALL DIMENSIONS ARE TO BE TAKEN FROM A DESIGNATED DATUM POINT.

C. DIMENSIONS ARE TO FACE OF FINISHED SURFACE UNLESS OTHERWISE NOTED.

D. DIAPER CHANGING STATION IS TO BE INSTALLED PER MANUFACTURER'S INSTRUCTIONS. UNIT IS TO BE FASTENED TO STRUCTURE AT ALL SIX CHASSIS ATTACHMENT POINTS.

E. LOCATE DIAPER CHANGING STATION AS SHOWN TO ALLOW NECESSARY CLEARANCE FOR OPERATION OF ALL RESTROOM FIXTURES. LOCATION SHALL NOT IMPEDE ACCESS, EGRESS, OR DOOR SWING.

F. ALL RESTROOM ACCESSORY MOUNTING HEIGHTS AND CLEARANCES SHALL COMPLY WITH THE ACCESSIBILITY REQUIREMENTS OF THE LOCAL JURISDICTION.

G. SEE MECHANICAL AND ELECTRICAL DRAWINGS FOR ALL SENSORS AND CONTROLS.

NOTE :
REFER SHEET G004.1 FOR ALL RESTROOM ACCESSORY MOUNTING HEIGHTS AND CLEARANCES.

PERMIT SET - FOR CONSTRUCTION USE

© 2022 STARBUCKS COFFEE COMPANY

STARBUCKS®
2401 UTAH AVENUE SOUTH
SEATTLE, WASHINGTON 98134
(206) 318-1575

THESE DRAWINGS AND THE PROJECT MANUAL ARE CONFIDENTIAL AND SHALL REMAIN THE SOLE PROPERTY OF STARBUCKS CORPORATION, WHICH IS THE OWNER OF THE COPYRIGHT IN THIS WORK. THEY SHALL NOT BE REPRODUCED (IN WHOLE OR IN PART), SHARED WITH THIRD PARTIES OR USED IN ANY MANNER ON OTHER PROJECTS OR EXTENSIONS TO THIS PROJECT WITHOUT THE PRIOR WRITTEN CONSENT OF STARBUCKS CORPORATION. THESE DRAWINGS AND SPECIFICATIONS ARE INTENDED TO EXPRESS DESIGN INTENT FOR A PROTOTYPICAL STARBUCKS STORE (WHICH IS SUBJECT TO CHANGE AT ANYTIME) AND DO NOT REFLECT ACTUAL SITE CONDITIONS. NEITHER PARTY SHALL HAVE ANY OBLIGATION NOR LIABILITY TO THE OTHER (EXCEPT STATED ABOVE) UNTIL A WRITTEN AGREEMENT IS FULLY EXECUTED BY BOTH PARTIES.

STARBUCKS TEMPLATE VERSION: i2023.04.24

PABLO GARCIA, AIA, REG. FL NO. AR99297

Gensler
MAIN OFFICE
M. ARTHUR GENSLER JR. & ASSOCIATES
220 MONTGOMERY STREET, SUITE 200
SAN FRANCISCO, CA 94104 USA
Tel (415) 433.3700
Fax (415) 836.4599

SATELLITE OFFICE
M. ARTHUR GENSLER JR. & ASSOCIATES
FL QUALIFIER'S LIC. NO. AR96486
545 NW 26TH ST
SUITE 250
MIAMI, FL 33127 USA
Tel (305) 350.7070
Fax (305) 350.7071

PROJECT NAME:
ST LUCIE WEST & SW
CASHEMERE BLVD

PROJECT ADDRESS:
920 SW SAINT LUCIE BLVD, PORT ST.LUCIE, FL 34986

STORE #:	81616
PROJECT #:	101357-001
ISSUE DATE:	07-08-2025
DESIGN MANAGER:	ASHLEY SUEIRAS
PRODUCTION DESIGNER:	GENSLER
CHECKED BY:	GENSLER

Revision Schedule

Rev	Date	By	Description

SHEET TITLE:
RESTROOM PLAN & ELEVATIONS
SCALE: AS SHOWN

SHEET NUMBER:
I401

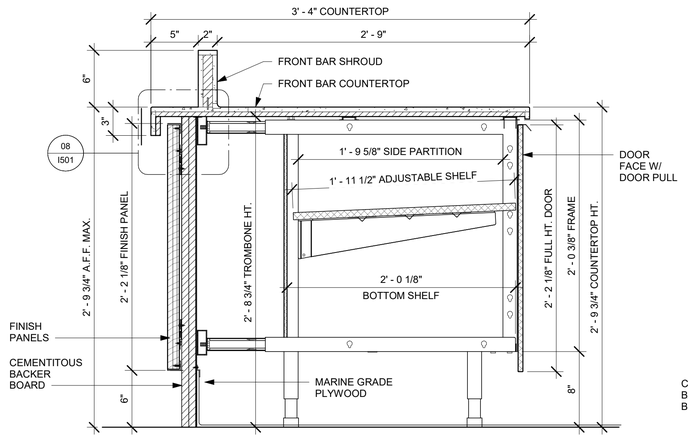

01 AC FRONT BAR CABINET ASSEMBLY ON LEGS SECTION
Scale: 1 1/2" = 1'-0"

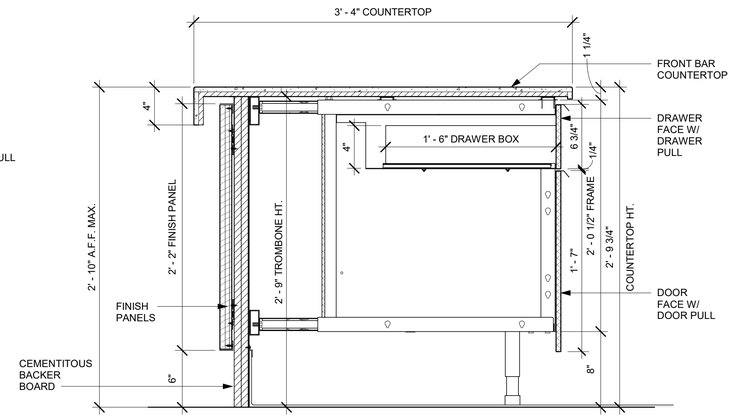

02 AC FRONT BAR DRAWER CABINET ASSEMBLY ON LEGS SECTION
Scale: 1 1/2" = 1'-0"

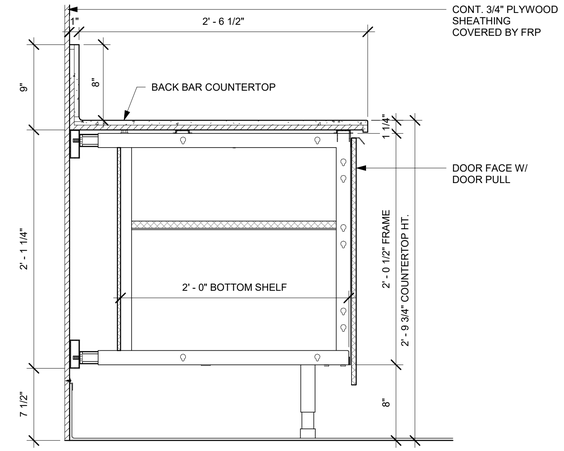

03 AC BACK BAR CABINET ASSEMBLY ON LEGS SECTION
Scale: 1 1/2" = 1'-0"

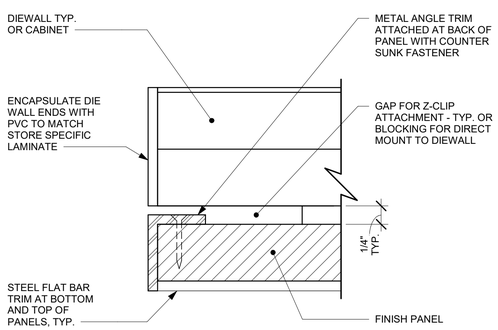

04 TYPICAL DETAIL AT FINISH PANEL END - VERTICAL METAL TRIM
Scale: 12" = 1'-0"

NOTES:

1. LOCATE PUMP WITHIN CORD LENGTH LIMIT. ORIENT WITH PUMP HEAD LEFT, RIGHT AND AT BOTTOM. LOOSEN PUMP HEAD CLAMP, ROTATE AND RE-TIGHTEN AS REQUIRED PER ORIENTATION TO PROVIDE FRONT ACCESS TO FLOW. ADJUSTMENT WITHIN CORD LENGTH LIMIT.
2. USE LOCKTITE ON ISOLATOR THREADS. DO NOT OVER TIGHTEN.
3. LOOSEN PUMP HEAD CLAMP, ROTATE AND RE-TIGHTEN AS REQUIRED FOR PUMP ORIENTATION.
4. EACH BACKER BOARD'S ASSEMBLY COMPONENTS INCLUDE:
   (1) BACKER BOARDS
   (4) TENETS, 1/4-20 VENDOR MOUNTED
   (8) WOOD SCREWS #8 1-1/4" (32MM)
   (4) NEOPRENE ISOLATORS, KARMAN RUBBER, K84-60 NEOPRENE
   (4) LOCK NUTS, 1/4-20 NYLON
   (4) WASHERS, 1/4" (7MM) FLAT

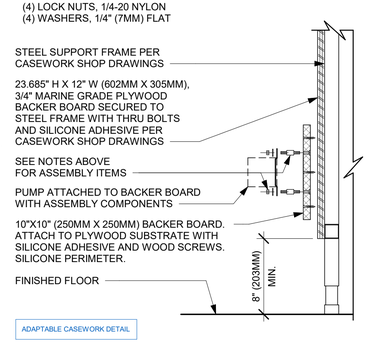

05 ESPRESSO PUMP MOUNTED AT CABINET
Scale: 1 1/2" = 1'-0"

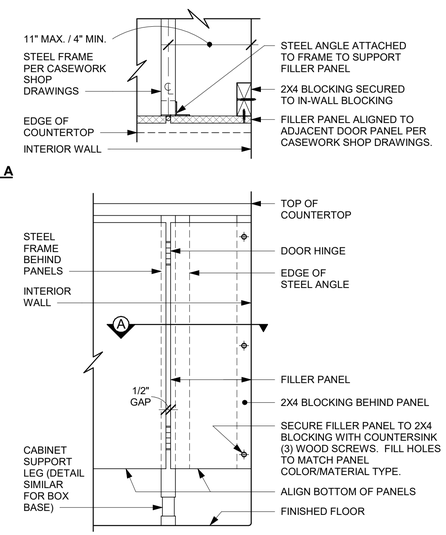

06 FILLER PANEL AT WALL
Scale: 1 1/2" = 1'-0"

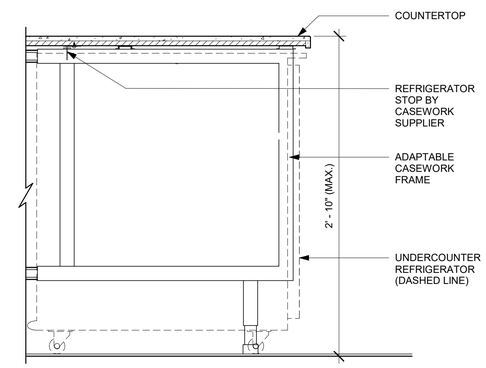

07 AC UNDERCOUNTER REFRIGERATOR SECTION
Scale: 1 1/2" = 1'-0"

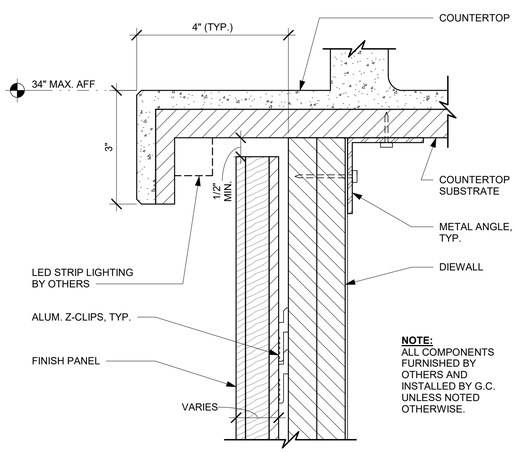

08 FINISH PANEL - BUILT-UP COUNTERTOP OVERHANG
Scale: 6" = 1'-0"

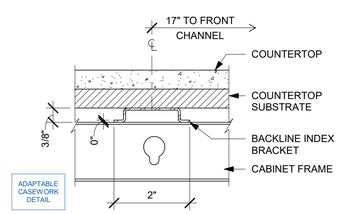

09 AC COUNTERTOP SUPPORT CHANNEL
Scale: 6" = 1'-0"

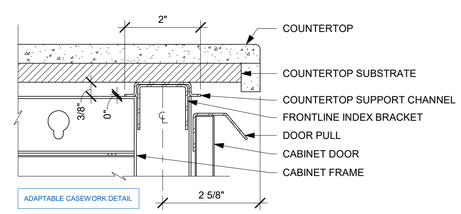

10 AC COUNTERTOP FRONT HAT SUPPORT CHANNEL
Scale: 6" = 1'-0"

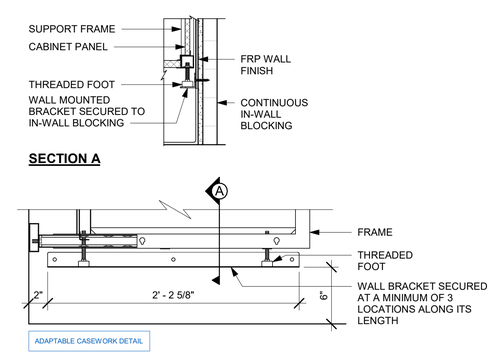

11 AC BACKLINE WALL BRACKET ASSEMBLY
Scale: 1 1/2" = 1'-0"

PERMIT SET - FOR CONSTRUCTION USE

© 2022 STARBUCKS COFFEE COMPANY

STARBUCKS®
2401 UTAH AVENUE SOUTH
SEATTLE, WASHINGTON 98134
(206) 318-1575

THESE DRAWINGS AND THE PROJECT MANUAL ARE CONFIDENTIAL AND SHALL REMAIN THE SOLE PROPERTY OF STARBUCKS CORPORATION, WHICH IS THE OWNER OF THE COPYRIGHT IN THIS WORK. THEY SHALL NOT BE REPRODUCED (IN WHOLE OR IN PART), SHARED WITH THIRD PARTIES OR USED IN ANY MANNER ON OTHER PROJECTS OR EXTENSIONS TO THIS PROJECT WITHOUT THE PRIOR WRITTEN CONSENT OF STARBUCKS CORPORATION. THESE DRAWINGS AND SPECIFICATIONS ARE INTENDED TO EXPRESS DESIGN INTENT FOR A PROTOTYPICAL STARBUCKS STORE (WHICH IS SUBJECT TO CHANGE AT ANYTIME) AND DO NOT REFLECT ACTUAL SITE CONDITIONS. NEITHER PARTY SHALL HAVE ANY OBLIGATION NOR LIABILITY TO THE OTHER (EXCEPT STATED ABOVE) UNTIL A WRITTEN AGREEMENT IS FULLY EXECUTED BY BOTH PARTIES.

STARBUCKS TEMPLATE VERSION: i2023.04.24

PABLO GARCIA, AIA, REG. FL NO. AR99297

Gensler

MAIN OFFICE
M. ARTHUR GENSLER JR. & ASSOCIATES
220 MONTGOMERY STREET, SUITE 200
SAN FRANCISCO, CA 94104 USA
Tel (415) 433.3700
Fax (415) 836.4599

SATELLITE OFFICE
M. ARTHUR GENSLER JR. & ASSOCIATES
FL QUALIFIER'S LIC. NO. AR96486
545 NW 26TH ST
SUITE 250
MIAMI, FL 33127 USA
Tel (305) 350.7070
Fax (305) 350.7071

PROJECT NAME:
ST LUCIE WEST & SW CASHEMERE BLVD

PROJECT ADDRESS:
920 SW SAINT LUCIE BLVD, PORT ST.LUCIE, FL 34986

STORE #:	81616
PROJECT #:	101357-001
ISSUE DATE:	07-08-2025
DESIGN MANAGER:	ASHLEY SUEIRAS
PRODUCTION DESIGNER:	GENSLER
CHECKED BY:	GENSLER

Revision Schedule

Rev	Date	By	Description

SHEET TITLE:
ADAPTABLE CASEWORK DETAILS
SCALE: AS SHOWN

SHEET NUMBER:
I501

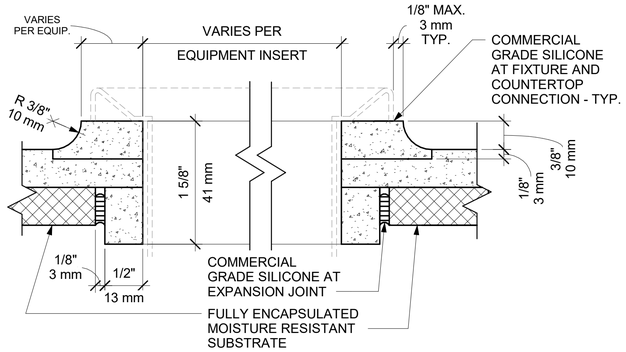

01 CORIAN COUNTERTOP TYP. SINK CUTOUT W/ COVED EDGE

Scale: 12" = 1'-0"

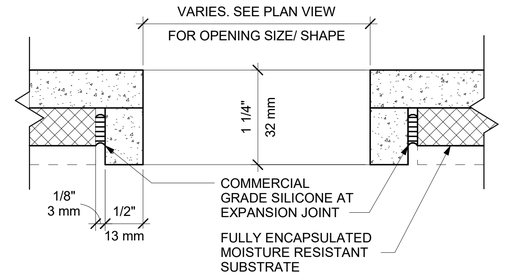

02 CORIAN COUNTERTOP TYP. CUTOUT AT TRASH AND GROMMET

Scale: 12" = 1'-0"

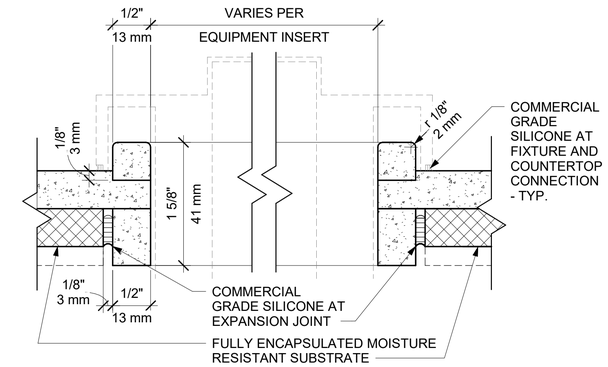

03 CORIAN COUNTERTOP TYP. ICE BIN CUTOUT WITH W/ SQUARED EDGE

Scale: 12" = 1'-0"

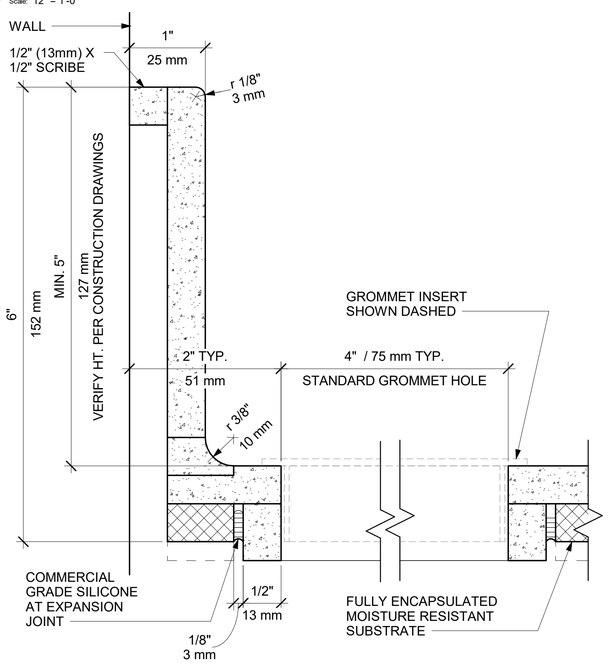

04 CORIAN COUNTERTOP BACKSPLASH AND GROMMET

Scale: 12" = 1'-0"

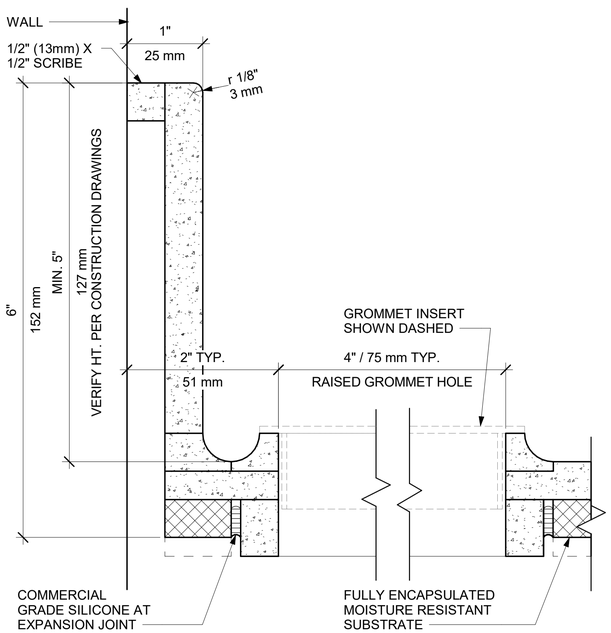

05 CORIAN COUNTERTOP BACKSPLASH AND COVED GROMMET

Scale: 12" = 1'-0"

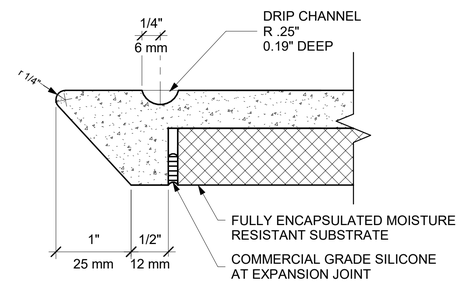

06 CORIAN COUNTERTOP FRONT EDGE AT ICE BIN

Scale: 12" = 1'-0"

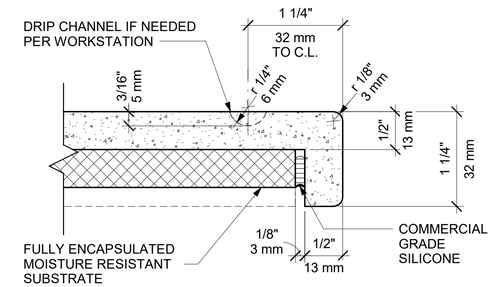

07 CORIAN COUNTERTOP FRONT EDGE

Scale: 12" = 1'-0"

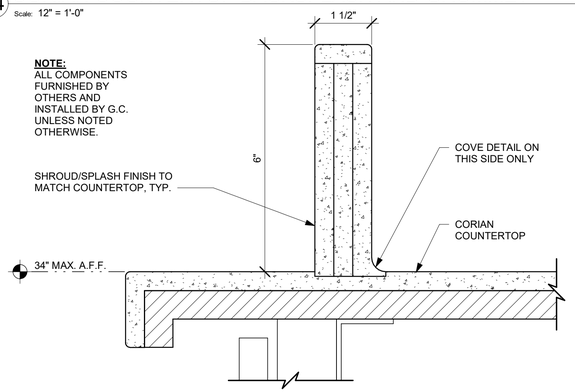

08 ESP SHROUD - CORIAN

Scale: 6" = 1'-0"

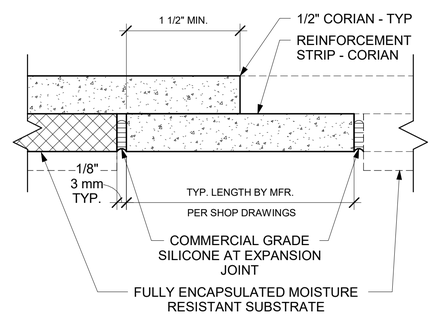

09 CORIAN COUNTERTOP REINFORCEMENT STRIP AT HARD SEAM

Scale: 12" = 1'-0"

PERMIT SET - FOR CONSTRUCTION USE

© 2022 STARBUCKS COFFEE COMPANY

STARBUCKS®
2401 UTAH AVENUE SOUTH
SEATTLE, WASHINGTON 98134
(206) 318-1575

THESE DRAWINGS AND THE PROJECT MANUAL ARE CONFIDENTIAL AND SHALL REMAIN THE SOLE PROPERTY OF STARBUCKS CORPORATION, WHICH IS THE OWNER OF THE COPYRIGHT IN THIS WORK. THEY SHALL NOT BE REPRODUCED (IN WHOLE OR IN PART), SHARED WITH THIRD PARTIES OR USED IN ANY MANNER ON OTHER PROJECTS OR EXTENSIONS TO THIS PROJECT WITHOUT THE PRIOR WRITTEN CONSENT OF STARBUCKS CORPORATION. THESE DRAWINGS AND SPECIFICATIONS ARE INTENDED TO EXPRESS DESIGN INTENT FOR A PROTOTYPICAL STARBUCKS STORE (WHICH IS SUBJECT TO CHANGE AT ANYTIME) AND DO NOT REFLECT ACTUAL SITE CONDITIONS. NEITHER PARTY SHALL HAVE ANY OBLIGATION NOR LIABILITY TO THE OTHER (EXCEPT STATED ABOVE) UNTIL A WRITTEN AGREEMENT IS FULLY EXECUTED BY BOTH PARTIES.

STARBUCKS TEMPLATE VERSION: i2023.04.24

PABLO GARCIA, AIA, REG. FL NO. AR99297

Gensler

MAIN OFFICE
M. ARTHUR GENSLER JR. & ASSOCIATES
220 MONTGOMERY STREET, SUITE 200
SAN FRANCISCO, CA 94104 USA
Tel (415) 433.3700
Fax (415) 836.4599

SATELLITE OFFICE
M. ARTHUR GENSLER JR. & ASSOCIATES
FL QUALIFIER'S LIC. NO. AR96486
545 NW 26TH ST
SUITE 250
MIAMI, FL 33127 USA
Tel (305) 350.7070
Fax (305) 350.7071

PROJECT NAME:
ST LUCIE WEST & SW CASHEMERE BLVD

PROJECT ADDRESS:
920 SW SAINT LUCIE BLVD, PORT ST.LUCIE, FL 34986

STORE #:	81616
PROJECT #:	101357-001
ISSUE DATE:	07-08-2025
DESIGN MANAGER:	ASHLEY SUEIRAS
PRODUCTION DESIGNER:	GENSLER
CHECKED BY:	GENSLER

Revision Schedule

Rev	Date	By	Description

SHEET TITLE:
CASEWORK DETAILS

SCALE: AS SHOWN

SHEET NUMBER:
I502

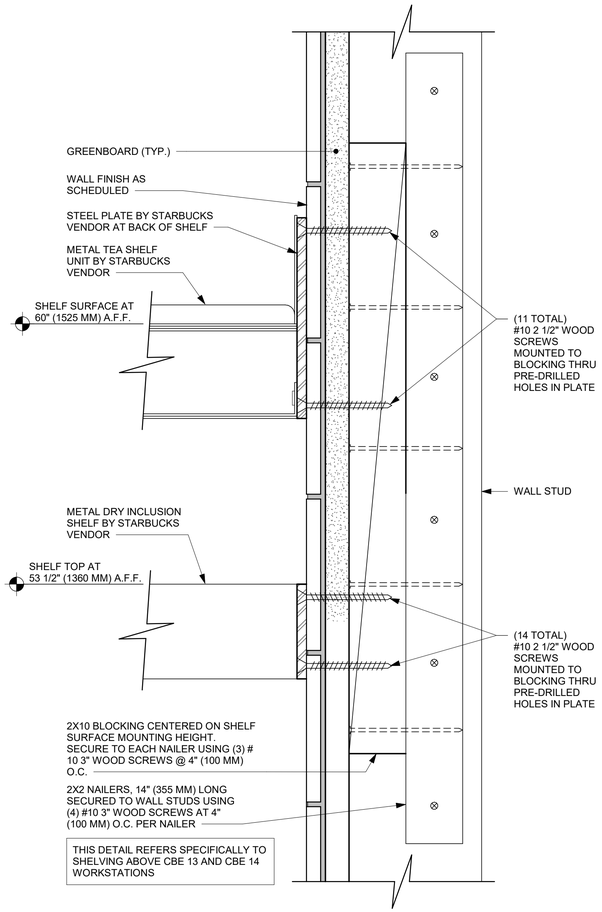

01 METAL TEA AND DRY INCLUSION SHELF WALL ATTACHMENT
Scale: 6" = 1'-0"

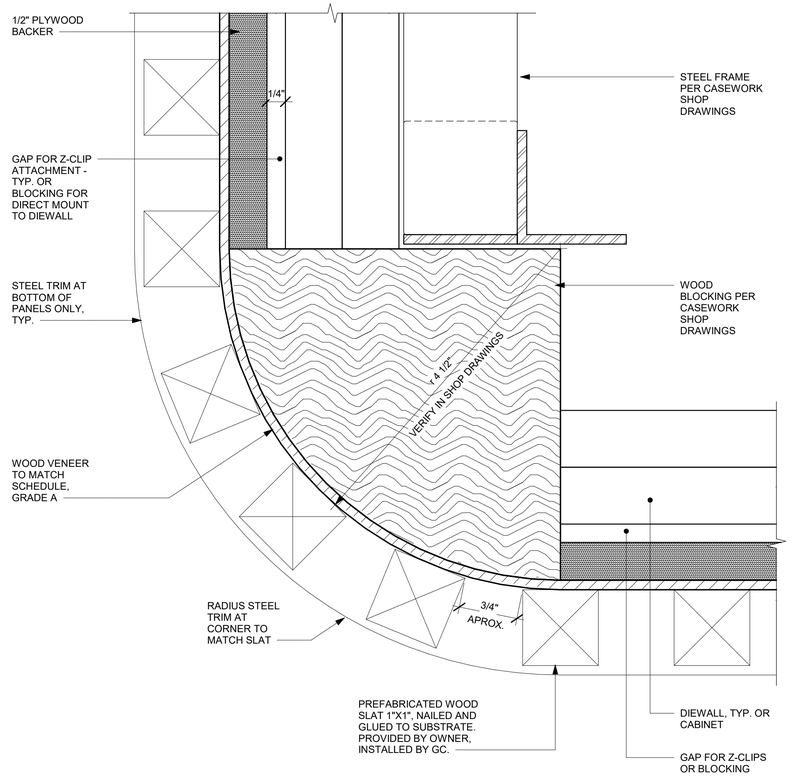

02 CUSTOM CORNER DETAIL - WOOD SLATS 1X1IN VERTICAL
Scale: 12" = 1'-0"

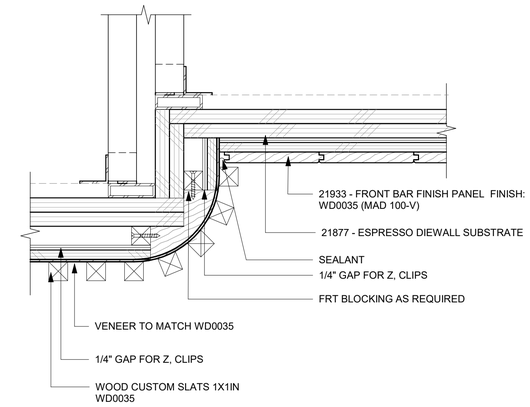

03 CUSTOM WOOD SLATS 1X1IN TO WOOD FINISH PANEL MAD 100-V
Scale: 3" = 1'-0"

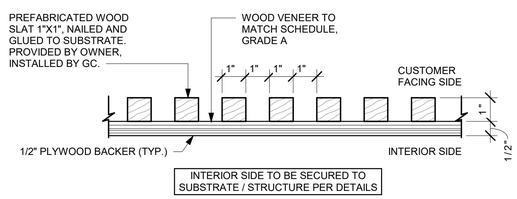

A ENLARGED SECTION PROFILE
NOT TO SCALE

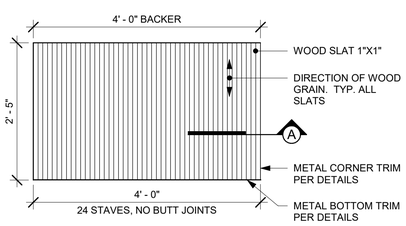

ELEVATION

04 FINISH APPLICATION WOOD SLATS 1X1IN VERTICAL
Scale: 3/4" = 1'-0"

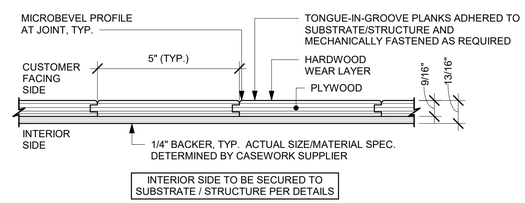

A ENLARGED SECTION PROFILE
NOT TO SCALE

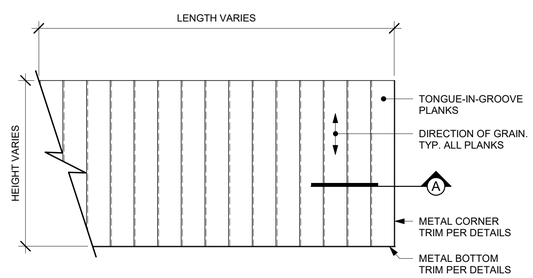

ELEVATION

05 FINISH APPLICATION (MAD 100-V) FIXED WIDTH WIDE PLANK
Scale: 3/4" = 1'-0"

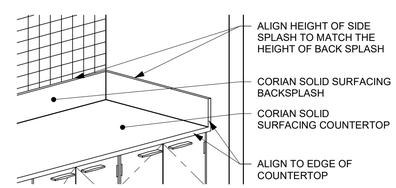

06 CORIAN SIDE SPLASH
Scale: 1/2" = 1'-0"

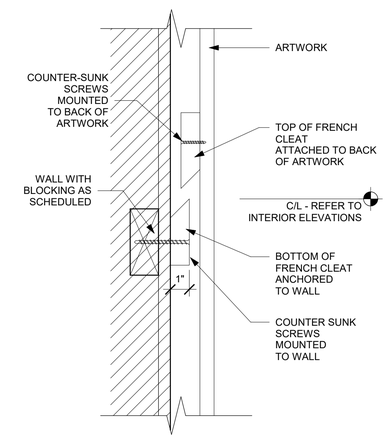

07 FRENCH CLEAT - ARTWORK MOUNT
Scale: 3" = 1'-0"

WALL TYPE FASTENER SCHEDULE

WALL TYPE	WALL BLOCKING	FASTENERS	NOTES
WOOD FRAME	X	#8 X3" (75MM) WD OR EQUIVALENT	REFER TO BLOCKING REQUIREMENTS
METAL FRAME	X	#8 CT. X 1 1/4" (30MM) MTL/WD OR EQUIVALENT	REFER TO BLOCKING REQUIREMENTS
CMU		MIN. 5/16" X 3" (8MM X 75MM) TAPCON OR EQUIVALENT	SPACE PER DETAIL THIS SHEET
CONCRETE		MIN. 1/4" X 3" (7MM X 75MM) SLEEVE ANCHOR OR EQUIVALENT	SPACE PER DETAIL THIS SHEET
BRICK		MIN. 1/4" X 1" (7MM X 25MM) WEDGE ANCHOR OR EQUIVALENT	SPACE PER DETAIL THIS SHEET AVOID SETTING ANCHORS IN MORTAR JOINTS

STUD WALL BLOCKING REQUIREMENTS:
WOOD STUD WALLS REQUIRE MIN. 2" X 6" (50MM X 150MM) WOOD BLOCKING SECURED FLUSH TO STUD FACE WITH (3) 10D NAILS (OR EQUIVALENT)

METAL STUD WALLS REQUIRE MIN. 2" X 6" (50MM X 150MM) WOOD BLOCKING SECURED FLUSH TO STUD FACE WITH MIN. (3) #6 CT. 1.25" (30MM) SCREWS (OR EQUIVALENT)

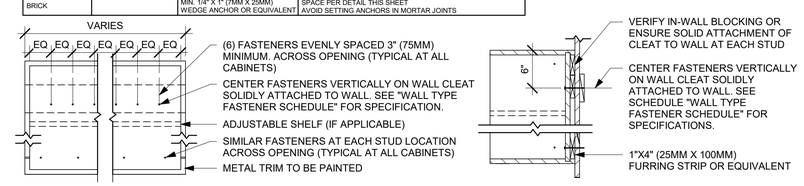

08 UPPER CABINET ATTACHMENT
Scale: 1" = 1'-0"

PERMIT SET - FOR CONSTRUCTION USE

© 2022 STARBUCKS COFFEE COMPANY

STARBUCKS®
2401 UTAH AVENUE SOUTH
SEATTLE, WASHINGTON 98134
(206) 318-1575

THESE DRAWINGS AND THE PROJECT MANUAL ARE CONFIDENTIAL AND SHALL REMAIN THE SOLE PROPERTY OF STARBUCKS CORPORATION, WHICH IS THE OWNER OF THE COPYRIGHT IN THIS WORK. THEY SHALL NOT BE REPRODUCED (IN WHOLE OR IN PART), SHARED WITH THIRD PARTIES OR USED IN ANY MANNER ON OTHER PROJECTS OR EXTENSIONS TO THIS PROJECT WITHOUT THE PRIOR WRITTEN CONSENT OF STARBUCKS CORPORATION. THESE DRAWINGS AND SPECIFICATIONS ARE INTENDED TO EXPRESS DESIGN INTENT FOR A PROTOTYPICAL STARBUCKS STORE (WHICH IS SUBJECT TO CHANGE AT ANYTIME) AND DO NOT REFLECT ACTUAL SITE CONDITIONS. NEITHER PARTY SHALL HAVE ANY OBLIGATION NOR LIABILITY TO THE OTHER (EXCEPT STATED ABOVE) UNTIL A WRITTEN AGREEMENT IS FULLY EXECUTED BY BOTH PARTIES.

STARBUCKS TEMPLATE VERSION: i2023.04.24

PABLO GARCIA, AIA, REG. FL NO. AR99297

Gensler
MAIN OFFICE
M. ARTHUR GENSLER JR. & ASSOCIATES
220 MONTGOMERY STREET, SUITE 200
SAN FRANCISCO, CA 94104 USA
Tel (415) 433.3700
Fax (415) 836.4599

SATELLITE OFFICE
M. ARTHUR GENSLER JR. & ASSOCIATES
FL QUALIFIER'S LIC. NO. AR96486
545 NW 26TH ST
SUITE 250
MIAMI, FL 33127 USA
Tel (305) 350.7070
Fax (305) 350.7071

PROJECT NAME:
ST LUCIE WEST & SW CASHEMERE BLVD

PROJECT ADDRESS:
920 SW SAINT LUCIE BLVD, PORT ST.LUCIE, FL 34986

STORE #: 81616
PROJECT #: 101357-001
ISSUE DATE: 07-08-2025
DESIGN MANAGER: ASHLEY SUEIRAS
PRODUCTION DESIGNER: GENSLER
CHECKED BY: GENSLER

Revision Schedule

Rev	Date	By	Description

SHEET TITLE:
CASEWORK DETAILS

SCALE: AS SHOWN

SHEET NUMBER:
I503

SBUX STANDARD DETAILS
REFER TO I102 FOR PLAN LOCATION

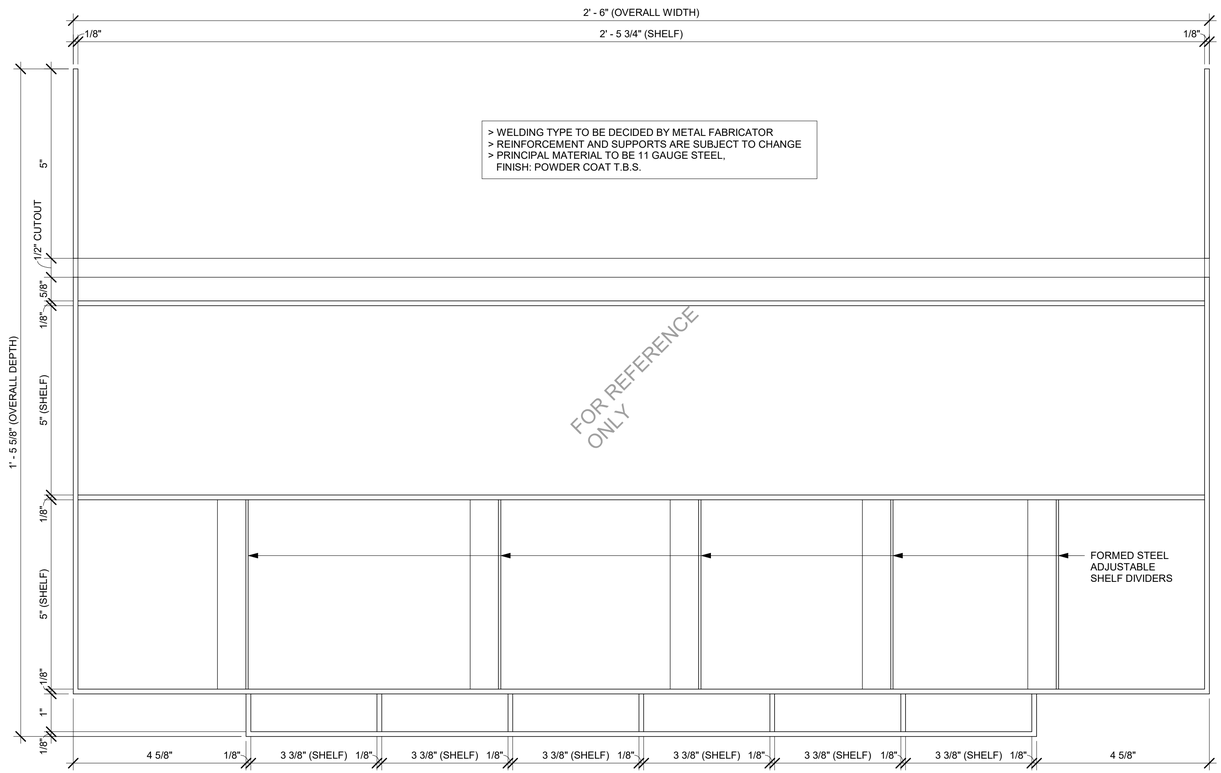

IMPULSE FIXTURE PLAN

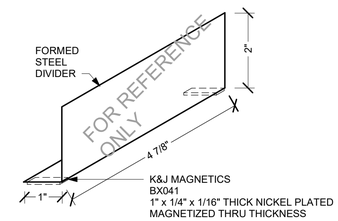

TYPICAL ADJUSTABLE SHELF DIVIDER ISOMETRIC

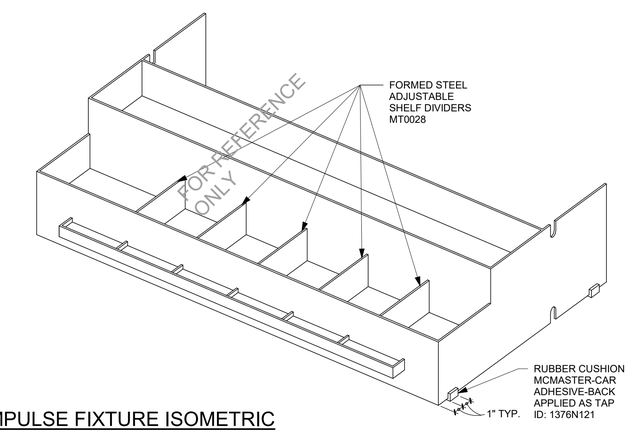

IMPULSE FIXTURE ISOMETRIC

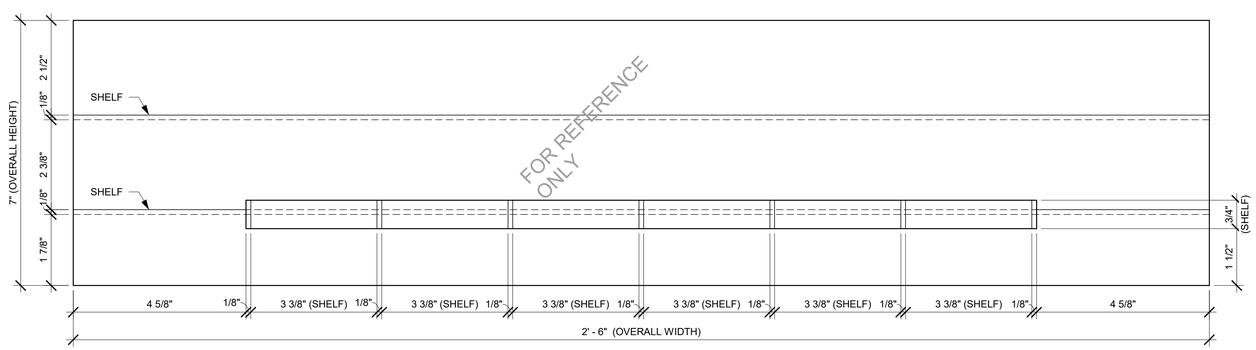

IMPULSE FIXTURE ELEVATION

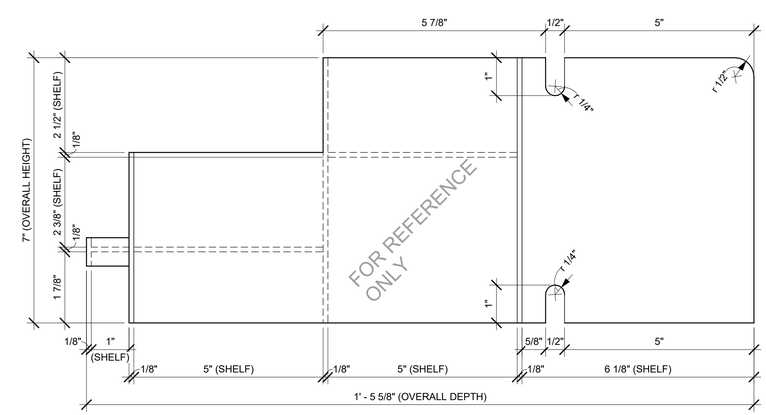

IMPULSE FIXTURE SECTION

01 CUSTOM IMPULSE FIXTURE
Scale: 6" = 1'-0"

PERMIT SET - FOR CONSTRUCTION USE

© 2022 STARBUCKS COFFEE COMPANY

STARBUCKS®
2401 UTAH AVENUE SOUTH
SEATTLE, WASHINGTON 98134
(206) 318-1575

THESE DRAWINGS AND THE PROJECT MANUAL ARE CONFIDENTIAL AND SHALL REMAIN THE SOLE PROPERTY OF STARBUCKS CORPORATION, WHICH IS THE OWNER OF THE COPYRIGHT IN THIS WORK. THEY SHALL NOT BE REPRODUCED (IN WHOLE OR IN PART), SHARED WITH THIRD PARTIES OR USED IN ANY MANNER ON OTHER PROJECTS OR EXTENSIONS TO THIS PROJECT WITHOUT THE PRIOR WRITTEN CONSENT OF STARBUCKS CORPORATION. THESE DRAWINGS AND SPECIFICATIONS ARE INTENDED TO EXPRESS DESIGN INTENT FOR A PROTOTYPICAL STARBUCKS STORE (WHICH IS SUBJECT TO CHANGE AT ANYTIME) AND DO NOT REFLECT ACTUAL SITE CONDITIONS. NEITHER PARTY SHALL HAVE ANY OBLIGATION NOR LIABILITY TO THE OTHER (EXCEPT STATED ABOVE) UNTIL A WRITTEN AGREEMENT IS FULLY EXECUTED BY BOTH PARTIES.

STARBUCKS TEMPLATE VERSION: i2023.04.24

PABLO GARCIA, AIA, REG. FL NO. AR99297

Gensler
MAIN OFFICE
M. ARTHUR GENSLER JR. & ASSOCIATES
220 MONTGOMERY STREET, SUITE 200
SAN FRANCISCO, CA 94104 USA
Tel (415) 433.3700
Fax (415) 836.4599

SATELLITE OFFICE
M. ARTHUR GENSLER JR. & ASSOCIATES
FL QUALIFIER'S LIC. NO. AR96486
543 NW 36TH ST
SUITE 250
MIAMI, FL 33127 USA
Tel (305) 350.7070
Fax (305) 350.7071

PROJECT NAME:
ST LUCIE WEST & SW CASHEMERE BLVD

PROJECT ADDRESS:
920 SW SAINT LUCIE BLVD, PORT ST.LUCIE, FL 34986

STORE #:	81616
PROJECT #:	101357-001
ISSUE DATE:	07-08-2025
DESIGN MANAGER:	ASHLEY SUEIRAS
PRODUCTION DESIGNER:	GENSLER
CHECKED BY:	GENSLER

Revision Schedule

Rev	Date	By	Description

SHEET TITLE:
IMPULSE FIXTURE DETAILS
SCALE: AS SHOWN

SHEET NUMBER:
I504

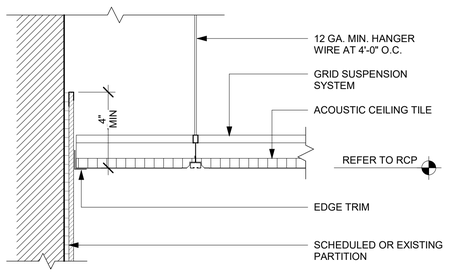

01 ACT CEILING AT POLYWALL
Scale: 3" = 1'-0"

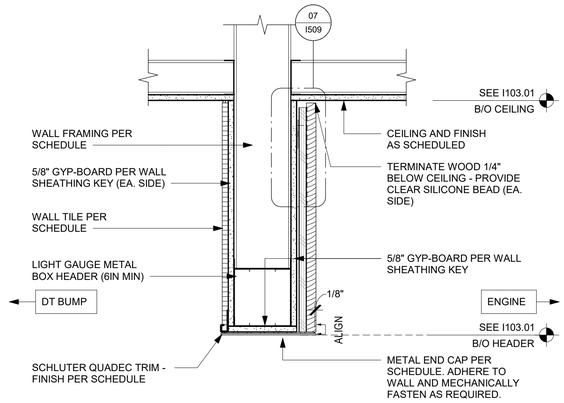

02 HEADER AT DT BUMP
Scale: 1 1/2" = 1'-0"

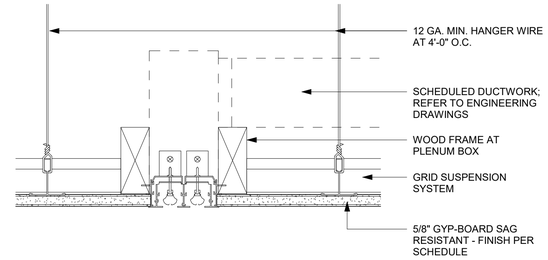

03 LINEAR DIFFUSER @ GYPSUM
Scale: 3" = 1'-0"

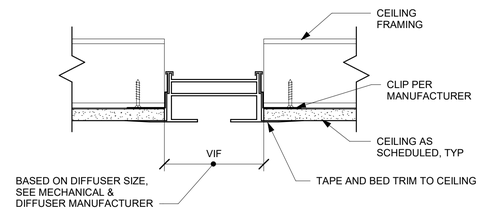

04 ENLARGED LINEAR DIFFUSER SECTION
Scale: 3" = 1'-0"

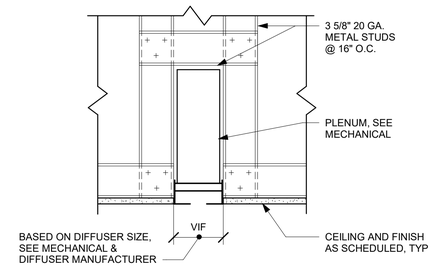

05 LINEAR DIFFUSER SECTION
Scale: 1 1/2" = 1'-0"

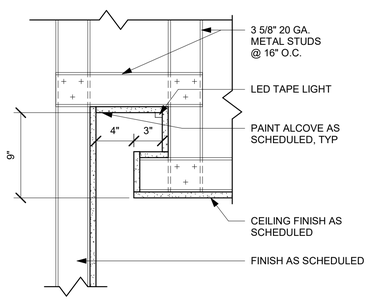

07 LED TAPE LIGHT COVE ABOVE SEATING
Scale: 1 1/2" = 1'-0"

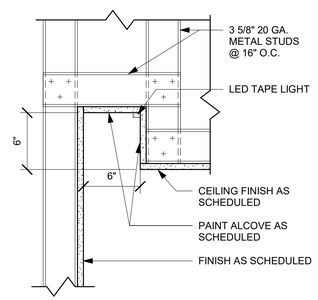

08 LED TAPE LIGHT COVE
Scale: 1 1/2" = 1'-0"

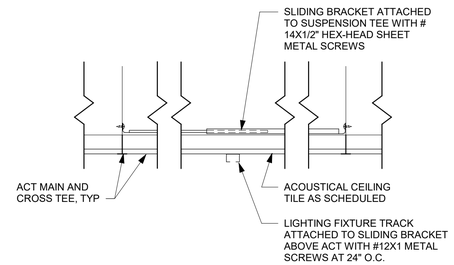

11 TRACK OPTION - SURFACE MOUNTED
Scale: 1 1/2" = 1'-0"

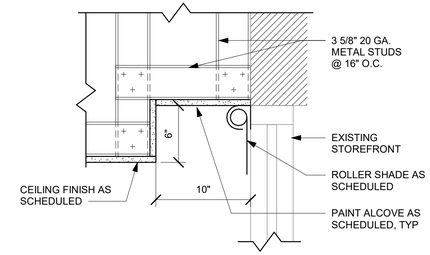

13 ROLLER SHADE COVE
Scale: 1 1/2" = 1'-0"

PERMIT SET - FOR CONSTRUCTION USE

© 2022 STARBUCKS COFFEE COMPANY

STARBUCKS®
2401 UTAH AVENUE SOUTH
SEATTLE, WASHINGTON 98134
(206) 318-1575

THESE DRAWINGS AND THE PROJECT MANUAL ARE CONFIDENTIAL AND SHALL REMAIN THE SOLE PROPERTY OF STARBUCKS CORPORATION, WHICH IS THE OWNER OF THE COPYRIGHT IN THIS WORK. THEY SHALL NOT BE REPRODUCED (IN WHOLE OR IN PART), SHARED WITH THIRD PARTIES OR USED IN ANY MANNER ON OTHER PROJECTS OR EXTENSIONS TO THIS PROJECT WITHOUT THE PRIOR WRITTEN CONSENT OF STARBUCKS CORPORATION. THESE DRAWINGS AND SPECIFICATIONS ARE INTENDED TO EXPRESS DESIGN INTENT FOR A PROTOTYPICAL STARBUCKS STORE (WHICH IS SUBJECT TO CHANGE AT ANYTIME) AND DO NOT REFLECT ACTUAL SITE CONDITIONS. NEITHER PARTY SHALL HAVE ANY OBLIGATION NOR LIABILITY TO THE OTHER (EXCEPT STATED ABOVE) UNTIL A WRITTEN AGREEMENT IS FULLY EXECUTED BY BOTH PARTIES.

STARBUCKS TEMPLATE VERSION: i2023.04.24

PABLO GARCIA, AIA, REG. FL NO. AR99297

Gensler
MAIN OFFICE
M. ARTHUR GENSLER JR. & ASSOCIATES
220 MONTGOMERY STREET, SUITE 200
SAN FRANCISCO, CA 94104 USA
Tel (415) 433.3700
Fax (415) 836.4599

SATELLITE OFFICE
M. ARTHUR GENSLER JR. & ASSOCIATES
FL QUALIFIER'S LIC. NO. AR96486
545 NW 26TH ST
SUITE 250
MIAMI, FL 33127 USA
Tel (305) 350.7070
Fax (305) 350.7071

PROJECT NAME:
ST LUCIE WEST & SW CASHEMERE BLVD

PROJECT ADDRESS:
920 SW SAINT LUCIE BLVD, PORT ST.LUCIE, FL 34986

STORE #:	81616
PROJECT #:	101357-001
ISSUE DATE:	07-08-2025
DESIGN MANAGER:	ASHLEY SUEIRAS
PRODUCTION DESIGNER:	GENSLER
CHECKED BY:	GENSLER

Revision Schedule

Rev	Date	By	Description

SHEET TITLE:
RCP DETAILS

SCALE: AS SHOWN

SHEET NUMBER:
I505

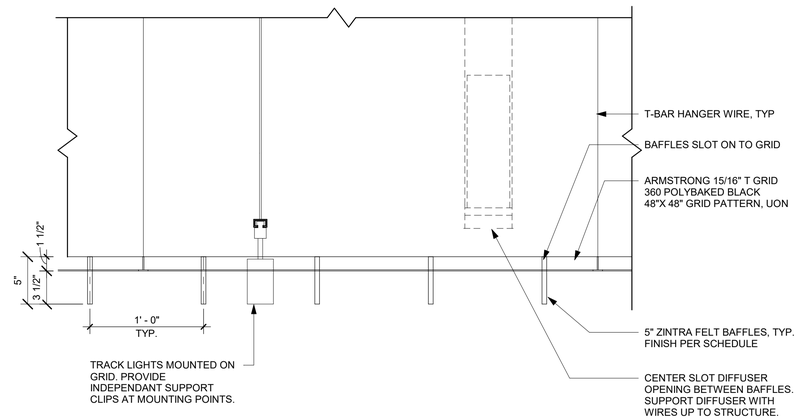

01 ZINTRA BAFFLES - CROSS SECTION

Scale: 1 1/2" = 1'-0"

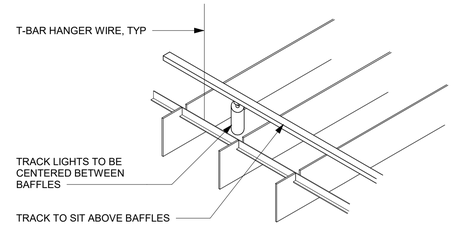

02 ZINTRA BAFFLES - TRACK AXON

Scale: 3/4" = 1'-0"

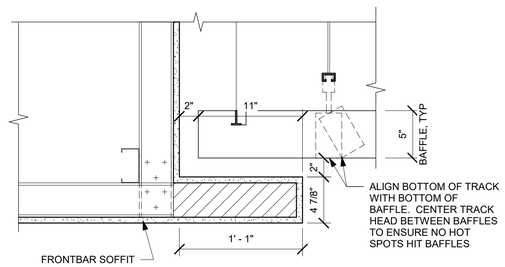

03 BAFFLE OPTION - HIDDEN EDGE

Scale: 1 1/2" = 1'-0"

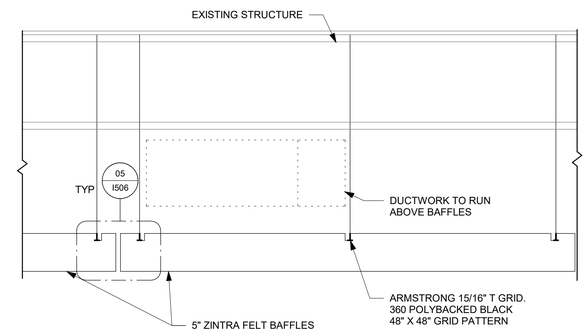

04 ZINTRA BAFFLES - SECTION

Scale: 3/4" = 1'-0"

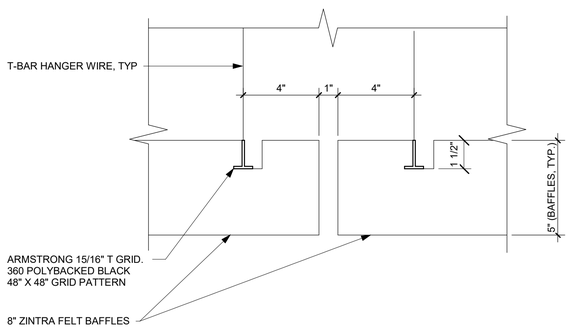

05 ENLARGED SEAM DETAIL

Scale: 3" = 1'-0"

PERMIT SET - FOR CONSTRUCTION USE

© 2022 STARBUCKS COFFEE COMPANY

STARBUCKS®
2401 UTAH AVENUE SOUTH
SEATTLE, WASHINGTON 98134
(206) 318-1575

THESE DRAWINGS AND THE PROJECT MANUAL ARE CONFIDENTIAL AND SHALL REMAIN THE SOLE PROPERTY OF STARBUCKS CORPORATION, WHICH IS THE OWNER OF THE COPYRIGHT IN THIS WORK. THEY SHALL NOT BE REPRODUCED (IN WHOLE OR IN PART), SHARED WITH THIRD PARTIES OR USED IN ANY MANNER ON OTHER PROJECTS OR EXTENSIONS TO THIS PROJECT WITHOUT THE PRIOR WRITTEN CONSENT OF STARBUCKS CORPORATION. THESE DRAWINGS AND SPECIFICATIONS ARE INTENDED TO EXPRESS DESIGN INTENT FOR A PROTOTYPICAL STARBUCKS STORE (WHICH IS SUBJECT TO CHANGE AT ANYTIME) AND DO NOT REFLECT ACTUAL SITE CONDITIONS. NEITHER PARTY SHALL HAVE ANY OBLIGATION NOR LIABILITY TO THE OTHER (EXCEPT STATED ABOVE) UNTIL A WRITTEN AGREEMENT IS FULLY EXECUTED BY BOTH PARTIES.

STARBUCKS TEMPLATE VERSION: i2023.04.24

PABLO GARCIA, AIA, REG. FL NO. AR99297

Gensler

MAIN OFFICE
M. ARTHUR GENSLER JR. & ASSOCIATES
220 MONTGOMERY STREET, SUITE 200
SAN FRANCISCO, CA 94104 USA
Tel (415) 433.3700
Fax (415) 836.4599

SATELLITE OFFICE
M. ARTHUR GENSLER JR. & ASSOCIATES
FL QUALIFIER'S LIC. NO. AR96486
543 NW 36TH ST
SUITE 250
MIAMI, FL 33127 USA
Tel (305) 350.7070
Fax (305) 350.7071

PROJECT NAME:
ST LUCIE WEST & SW
CASHEMERE BLVD

PROJECT ADDRESS:
920 SW SAINT LUCIE BLVD, PORT
ST.LUCIE, FL 34986

STORE #: 81616
PROJECT #: 101357-001
ISSUE DATE: 07-08-2025
DESIGN MANAGER: ASHLEY SUEIRAS
PRODUCTION DESIGNER: GENSLER
CHECKED BY: GENSLER

Revision Schedule

Rev	Date	By	Description

SHEET TITLE:
RCP DETAILS

SCALE: AS SHOWN

SHEET NUMBER:
I506

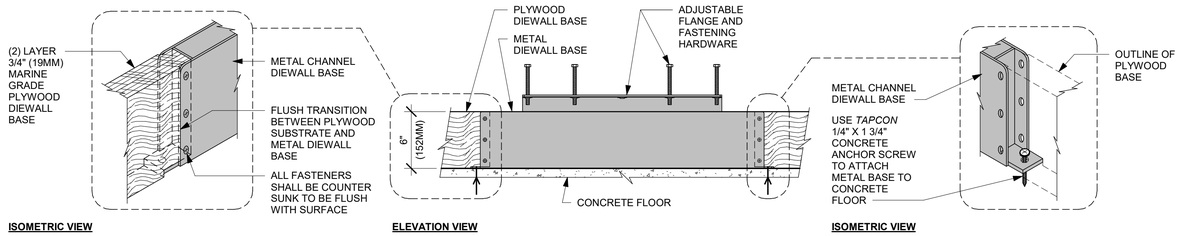

ADAPTABLE CASEWORK FLOORING DETAIL

01 AC FRONT BAR DIEWALL METAL TO WOOD BASE TRANSITION

Scale: 1 1/2" = 1'-0"

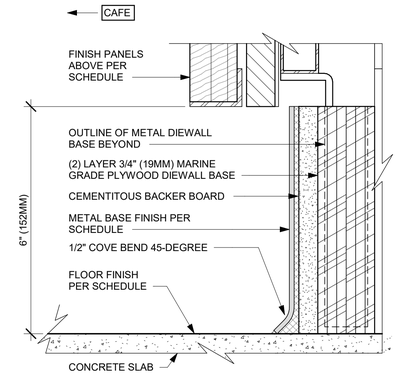

02 AC FRONT BAR CABINET PLYWOOD DIEWALL BASE

Scale: 6" = 1'-0"

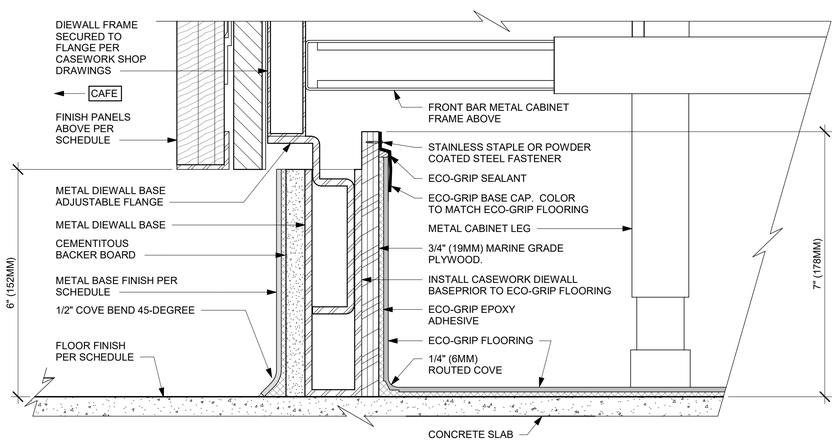

03 ECO-GRIP AC FRONT BAR CABINET ON LEGS

Scale: 6" = 1'-0"

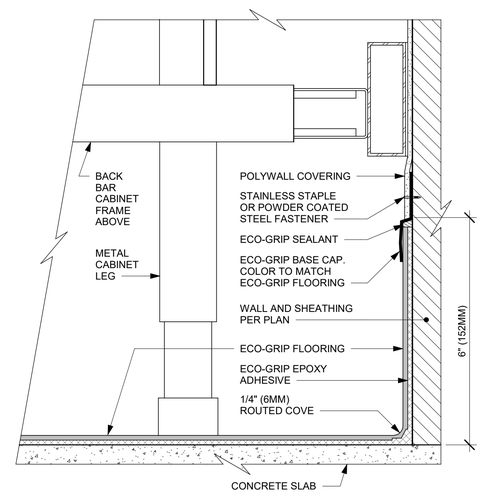

04 ECO-GRIP AC BACK BAR CABINET ON LEGS

Scale: 6" = 1'-0"

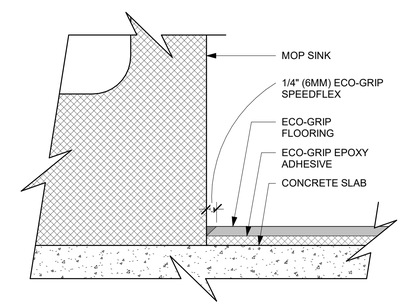

05 ECO-GRIP AT MOP SINK

Scale: 12" = 1'-0"

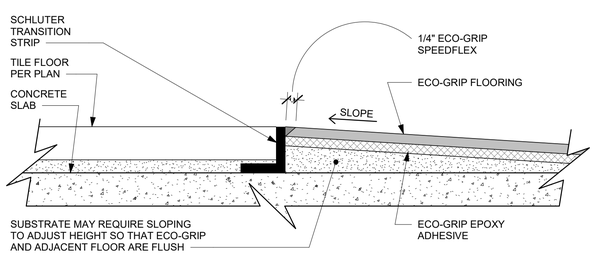

THIS DETAIL APPLIES TO FLOOR AREAS BELOW FIXTURES AND EQUIPMENT ONLY

06 ECO-GRIP TO TILE TRANSITION (FIXTURES & EQUIPMENT)

Scale: 12" = 1'-0"

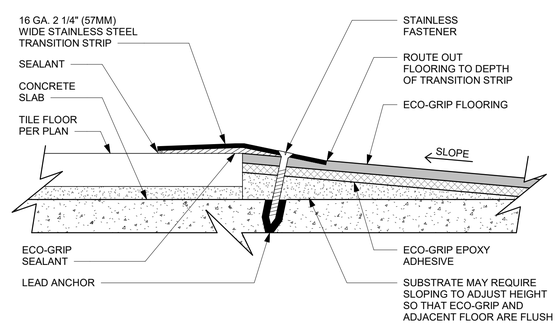

07 ECO-GRIP TO TILE TRANSITION AT FOOT TRAFFIC AREA

Scale: 12" = 1'-0"

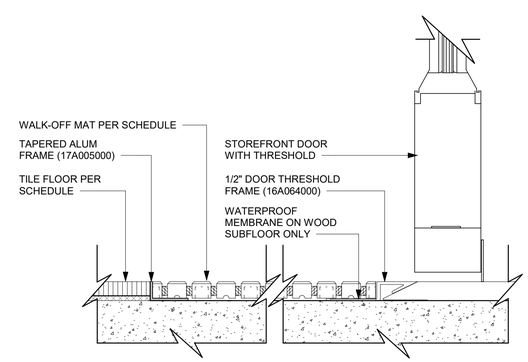

08 TRANSITION - TILE TO WALK OFF MAT - HELIX

Scale: 6" = 1'-0"

PERMIT SET - FOR CONSTRUCTION USE

© 2022 STARBUCKS COFFEE COMPANY

STARBUCKS®
2401 UTAH AVENUE SOUTH
SEATTLE, WASHINGTON 98134
(206) 318-1575

THESE DRAWINGS AND THE PROJECT MANUAL ARE CONFIDENTIAL AND SHALL REMAIN THE SOLE PROPERTY OF STARBUCKS CORPORATION, WHICH IS THE OWNER OF THE COPYRIGHT IN THIS WORK. THEY SHALL NOT BE REPRODUCED (IN WHOLE OR IN PART), SHARED WITH THIRD PARTIES OR USED IN ANY MANNER ON OTHER PROJECTS OR EXTENSIONS TO THIS PROJECT WITHOUT THE PRIOR WRITTEN CONSENT OF STARBUCKS CORPORATION. THESE DRAWINGS AND SPECIFICATIONS ARE INTENDED TO EXPRESS DESIGN INTENT FOR A PROTOTYPICAL STARBUCKS STORE (WHICH IS SUBJECT TO CHANGE AT ANYTIME) AND DO NOT REFLECT ACTUAL SITE CONDITIONS. NEITHER PARTY SHALL HAVE ANY OBLIGATION NOR LIABILITY TO THE OTHER (EXCEPT STATED ABOVE) UNTIL A WRITTEN AGREEMENT IS FULLY EXECUTED BY BOTH PARTIES.

STARBUCKS TEMPLATE VERSION: i2023.04.24

PABLO GARCIA, AIA, REG. FL NO. AR99297

Gensler

MAIN OFFICE
M. ARTHUR GENSLER JR. & ASSOCIATES
220 MONTGOMERY STREET, SUITE 200
SAN FRANCISCO, CA 94104 USA
Tel (415) 433.3700
Fax (415) 836.4599

SATELLITE OFFICE
M. ARTHUR GENSLER JR. & ASSOCIATES
FL QUALIFIER'S LIC. NO. AR96486
545 NW 26TH ST
SUITE 250
MIAMI, FL 33127 USA
Tel (305) 350.7070
Fax (305) 350.7071

PROJECT NAME:
ST LUCIE WEST & SW CASHEMERE BLVD

PROJECT ADDRESS:
920 SW SAINT LUCIE BLVD, PORT ST.LUCIE, FL 34986

STORE #:	81616
PROJECT #:	101357-001
ISSUE DATE:	07-08-2025
DESIGN MANAGER:	ASHLEY SUEIRAS
PRODUCTION DESIGNER:	GENSLER
CHECKED BY:	GENSLER

Revision Schedule

Rev	Date	By	Description

SHEET TITLE:
FLOOR FINISH DETAILS

SCALE: AS SHOWN

SHEET NUMBER:
I507

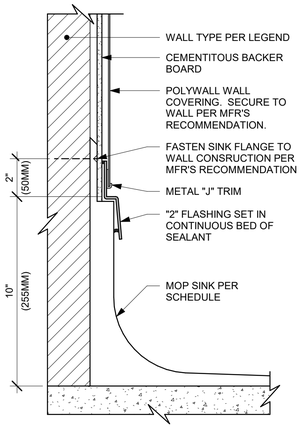

01 MOP SINK WITH FLANGE
Scale: 3" = 1'-0"

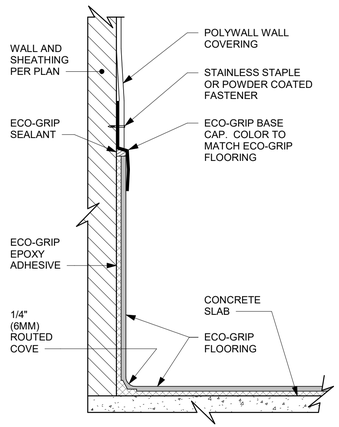

02 ECO-GRIP BASE CAP WITH POLYWALL
Scale: 6" = 1'-0"

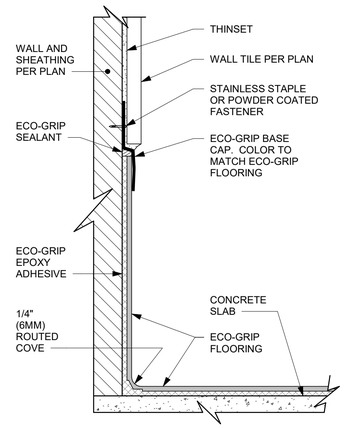

03 ECO-GRIP BASE CAP WITH TILED WALL
Scale: 6" = 1'-0"

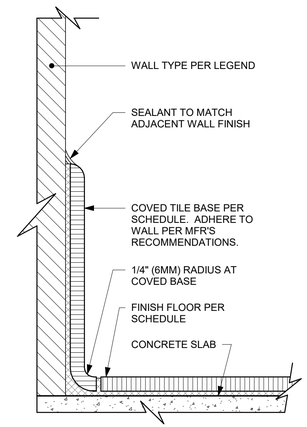

04 INTEGRAL TILE BASE AT WALL
Scale: 6" = 1'-0"

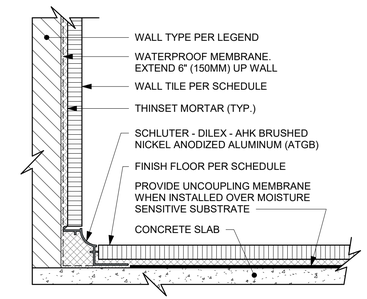

05 WALL TILE TO FLOOR TILE TRANSITION
Scale: 6" = 1'-0"

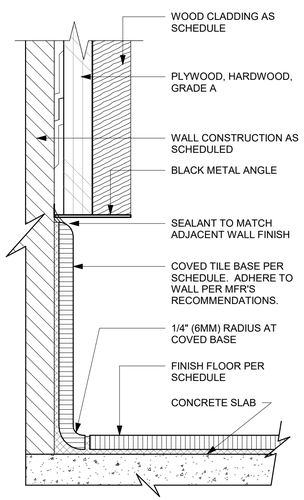

06 TOP SET - TILE BASE AT WOOD WALL
Scale: 6" = 1'-0"

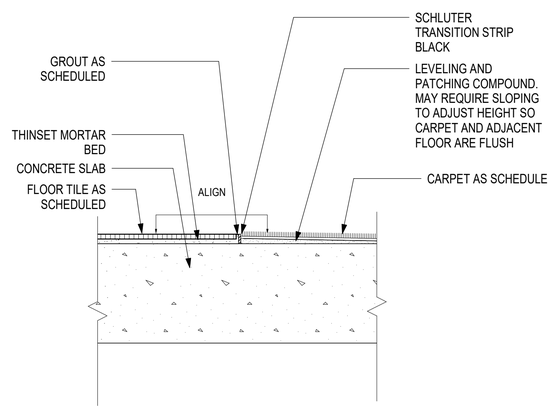

07 CARPET - TILE TRANSITION
Scale: 3" = 1'-0"

PERMIT SET - FOR CONSTRUCTION USE

© 2022 STARBUCKS COFFEE COMPANY

STARBUCKS®
2401 UTAH AVENUE SOUTH
SEATTLE, WASHINGTON 98134
(206) 318-1575

THESE DRAWINGS AND THE PROJECT MANUAL ARE CONFIDENTIAL AND SHALL REMAIN THE SOLE PROPERTY OF STARBUCKS CORPORATION, WHICH IS THE OWNER OF THE COPYRIGHT IN THIS WORK. THEY SHALL NOT BE REPRODUCED (IN WHOLE OR IN PART), SHARED WITH THIRD PARTIES OR USED IN ANY MANNER ON OTHER PROJECTS OR EXTENSIONS TO THIS PROJECT WITHOUT THE PRIOR WRITTEN CONSENT OF STARBUCKS CORPORATION. THESE DRAWINGS AND SPECIFICATIONS ARE INTENDED TO EXPRESS DESIGN INTENT FOR A PROTOTYPICAL STARBUCKS STORE (WHICH IS SUBJECT TO CHANGE AT ANYTIME) AND DO NOT REFLECT ACTUAL SITE CONDITIONS. NEITHER PARTY SHALL HAVE ANY OBLIGATION NOR LIABILITY TO THE OTHER (EXCEPT STATED ABOVE) UNTIL A WRITTEN AGREEMENT IS FULLY EXECUTED BY BOTH PARTIES.

STARBUCKS TEMPLATE VERSION: i2023.04.24

PABLO GARCIA, AIA, REG. FL NO. AR99297

Gensler

MAIN OFFICE
M. ARTHUR GENSLER JR. & ASSOCIATES
220 MONTGOMERY STREET, SUITE 200
SAN FRANCISCO, CA 94104 USA
Tel (415) 433.3700
Fax (415) 836.4599

SATELLITE OFFICE
M. ARTHUR GENSLER JR. & ASSOCIATES
FL QUALIFIER'S LIC. NO. AR96486
545 NW 26TH ST
SUITE 250
MIAMI, FL 33127 USA
Tel (305) 350.7070
Fax (305) 350.7071

PROJECT NAME:
ST LUCIE WEST & SW CASHEMERE BLVD

PROJECT ADDRESS:
920 SW SAINT LUCIE BLVD, PORT ST.LUCIE, FL 34986

STORE #:	81616
PROJECT #:	101357-001
ISSUE DATE:	07-08-2025
DESIGN MANAGER:	ASHLEY SUEIRAS
PRODUCTION DESIGNER:	GENSLER
CHECKED BY:	GENSLER

Revision Schedule

Rev	Date	By	Description

SHEET TITLE:
FLOOR FINISH DETAILS

SCALE: AS SHOWN

SHEET NUMBER:
I508

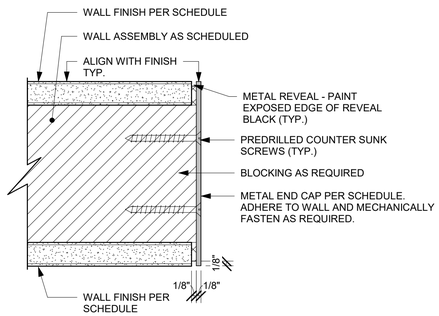

01 METAL TRIM AT BOH & ENGINE OPENING
Scale: 6" = 1'-0"

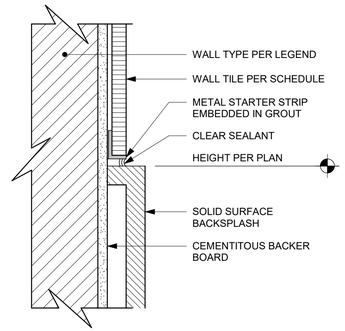

02 SS BACKSPLASH TO TILE TRANSITION
Scale: 6" = 1'-0"

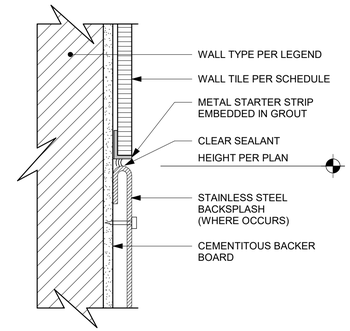

03 SS BACKSPLASH TO TILE TRANSITION
Scale: 6" = 1'-0"

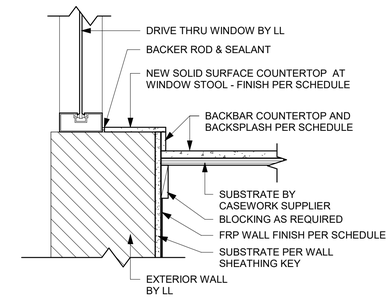

04 FINISH DETAIL AT BACKBAR SILL
Scale: 1 1/2" = 1'-0"

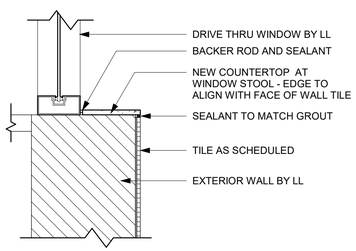

06 FINISH DETAIL AT DT SILL
Scale: 1 1/2" = 1'-0"

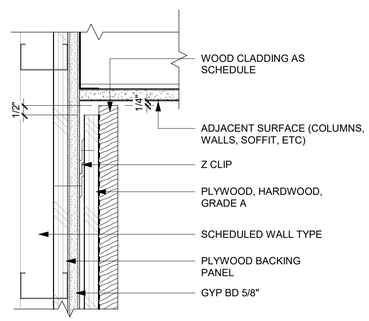

07 WOOD CLADDING WALL - SECTION
Scale: 3" = 1'-0"

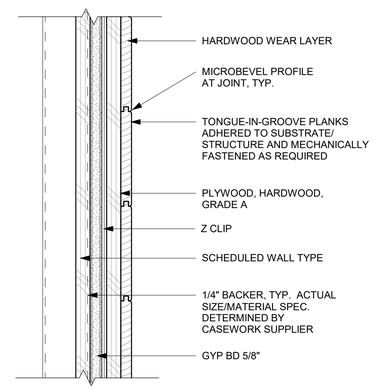

08 WOOD CLADDING WALL - TOP VIEW - MAD 100-V
Scale: 3" = 1'-0"

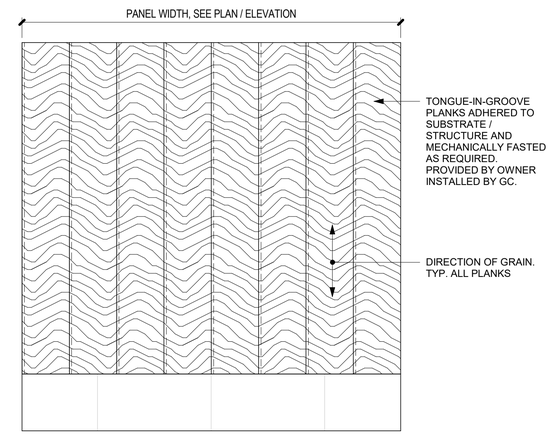

09 WOOD CLADDING WALL ELEVATION- MAD 100-V
Scale: 1 1/2" = 1'-0"

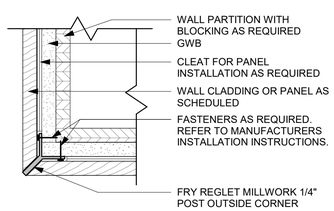

10 Y-TRIM DETAIL - WOOD
Scale: 3" = 1'-0"

PERMIT SET - FOR CONSTRUCTION USE

© 2022 STARBUCKS COFFEE COMPANY

STARBUCKS®
2401 UTAH AVENUE SOUTH
SEATTLE, WASHINGTON 98134
(206) 318-1575

THESE DRAWINGS AND THE PROJECT MANUAL ARE CONFIDENTIAL AND SHALL REMAIN THE SOLE PROPERTY OF STARBUCKS CORPORATION, WHICH IS THE OWNER OF THE COPYRIGHT IN THIS WORK. THEY SHALL NOT BE REPRODUCED (IN WHOLE OR IN PART), SHARED WITH THIRD PARTIES OR USED IN ANY MANNER ON OTHER PROJECTS OR EXTENSIONS TO THIS PROJECT WITHOUT THE PRIOR WRITTEN CONSENT OF STARBUCKS CORPORATION. THESE DRAWINGS AND SPECIFICATIONS ARE INTENDED TO EXPRESS DESIGN INTENT FOR A PROTOTYPICAL STARBUCKS STORE (WHICH IS SUBJECT TO CHANGE AT ANYTIME) AND DO NOT REFLECT ACTUAL SITE CONDITIONS. NEITHER PARTY SHALL HAVE ANY OBLIGATION NOR LIABILITY TO THE OTHER (EXCEPT STATED ABOVE) UNTIL A WRITTEN AGREEMENT IS FULLY EXECUTED BY BOTH PARTIES.

STARBUCKS TEMPLATE VERSION: i2023.04.24

PABLO GARCIA, AIA, REG. FL NO. AR99297

Gensler
MAIN OFFICE
M. ARTHUR GENSLER JR. & ASSOCIATES
220 MONTGOMERY STREET, SUITE 200
SAN FRANCISCO, CA 94104 USA
Tel (415) 433.3700
Fax (415) 836.4599

SATELLITE OFFICE
M. ARTHUR GENSLER JR. & ASSOCIATES
FL QUALIFIER'S LIC. NO. AR96486
543 NW 36TH ST
SUITE 250
MIAMI, FL 33127 USA
Tel (305) 350.7070
Fax (305) 350.7071

PROJECT NAME:
ST LUCIE WEST & SW CASHEMERE BLVD

PROJECT ADDRESS:
920 SW SAINT LUCIE BLVD, PORT ST.LUCIE, FL 34986

STORE #:	81616
PROJECT #:	101357-001
ISSUE DATE:	07-08-2025
DESIGN MANAGER:	ASHLEY SUEIRAS
PRODUCTION DESIGNER:	GENSLER
CHECKED BY:	GENSLER

Revision Schedule

Rev	Date	By	Description

SHEET TITLE:
WALL FINISH DETAILS

SCALE: AS SHOWN

SHEET NUMBER:
I509

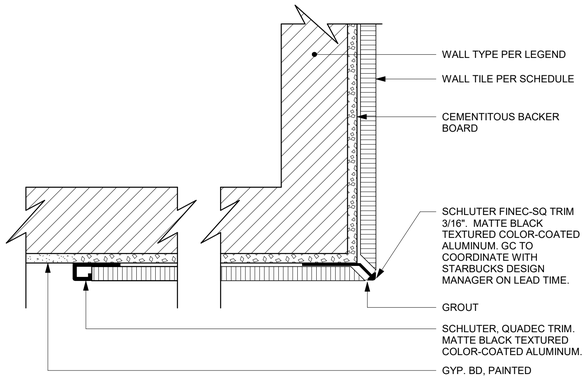

01 SCHLUTER DETAIL AT TILE CORNER & EDGE
Scale: 6" = 1'-0"

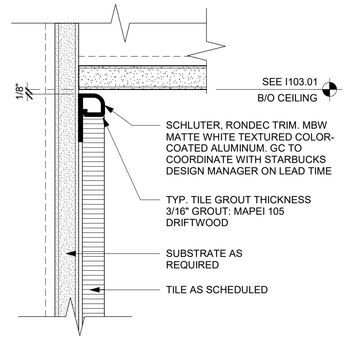

02 TILE TOP TRIM AT CEILING TRANSITION
Scale: 6" = 1'-0"

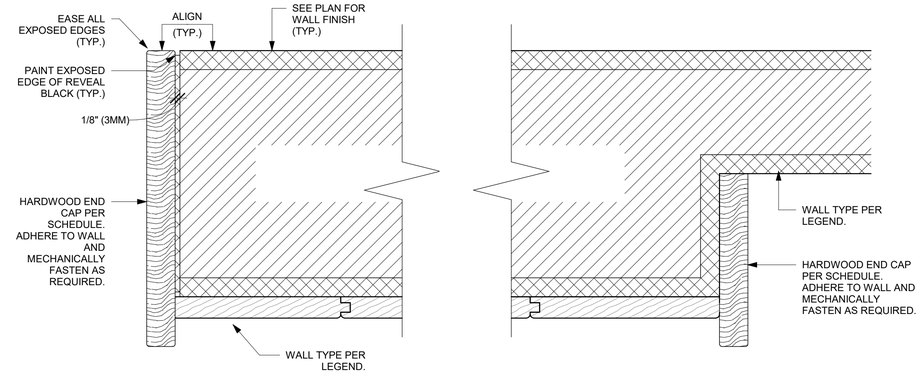

03 WALL WOOD END CAP AT WOOD WALL
Scale: 6" = 1'-0"

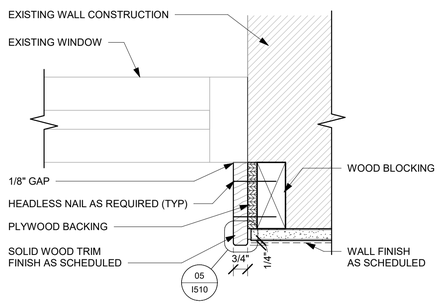

04 WOOD TRIM AT WINDOW
Scale: 3" = 1'-0"

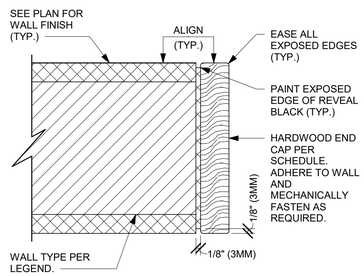

06 WALL WOOD END CAP
Scale: 6" = 1'-0"

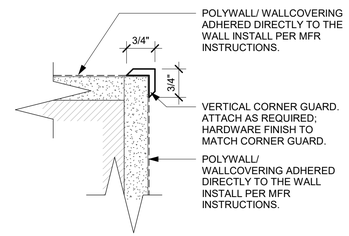

7 10829 - CORNER GUARD DETAIL
Scale: 6" = 1'-0"

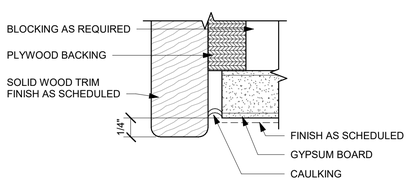

05 WOOD TRIM CAULKING
Scale: 12" = 1'-0"

PERMIT SET - FOR CONSTRUCTION USE

© 2022 STARBUCKS COFFEE COMPANY

STARBUCKS®
2401 UTAH AVENUE SOUTH
SEATTLE, WASHINGTON 98134
(206) 318-1575

THESE DRAWINGS AND THE PROJECT MANUAL ARE CONFIDENTIAL AND SHALL REMAIN THE SOLE PROPERTY OF STARBUCKS CORPORATION, WHICH IS THE OWNER OF THE COPYRIGHT IN THIS WORK. THEY SHALL NOT BE REPRODUCED (IN WHOLE OR IN PART), SHARED WITH THIRD PARTIES OR USED IN ANY MANNER ON OTHER PROJECTS OR EXTENSIONS TO THIS PROJECT WITHOUT THE PRIOR WRITTEN CONSENT OF STARBUCKS CORPORATION. THESE DRAWINGS AND SPECIFICATIONS ARE INTENDED TO EXPRESS DESIGN INTENT FOR A PROTOTYPICAL STARBUCKS STORE (WHICH IS SUBJECT TO CHANGE AT ANYTIME) AND DO NOT REFLECT ACTUAL SITE CONDITIONS. NEITHER PARTY SHALL HAVE ANY OBLIGATION NOR LIABILITY TO THE OTHER (EXCEPT STATED ABOVE) UNTIL A WRITTEN AGREEMENT IS FULLY EXECUTED BY BOTH PARTIES.

STARBUCKS TEMPLATE VERSION: i2023.04.24

PABLO GARCIA, AIA, REG. FL NO. AR99297

Gensler
MAIN OFFICE
M. ARTHUR GENSLER JR. & ASSOCIATES
220 MONTGOMERY STREET, SUITE 200
SAN FRANCISCO, CA 94104 USA
Tel (415) 433.3700
Fax (415) 836.4599

SATELLITE OFFICE
M. ARTHUR GENSLER JR. & ASSOCIATES
FL QUALIFIER'S LIC. NO. AR96486
545 NW 26TH ST
SUITE 250
MIAMI, FL 33127 USA
Tel (305) 350.7070
Fax (305) 350.7071

PROJECT NAME:
ST LUCIE WEST & SW CASHEMERE BLVD

PROJECT ADDRESS:
920 SW SAINT LUCIE BLVD, PORT ST.LUCIE, FL 34986

STORE #:	81616
PROJECT #:	101357-001
ISSUE DATE:	07-08-2025
DESIGN MANAGER:	ASHLEY SUEIRAS
PRODUCTION DESIGNER:	GENSLER
CHECKED BY:	GENSLER

Revision Schedule

Rev	Date	By	Description

SHEET TITLE:
WALL FINISH DETAILS

SCALE: AS SHOWN

SHEET NUMBER:
I510

ARTWORK DETAIL - GALLERY - X0501, X0502, X0503, X0504, X0505, X0506, X0507, X0508, X0509

01 Scale: 1 : 5

X0505
ARTWORK DID: 16784
ART SIZE: 9X11IN
OVERALL SIZE: 10.5X12.5IN
FORMAT: FRAMED WITH NOT MAT.
FRAME: 1A - LARSON-JUHL
CRANBROOK 1 & 2 - 613674 EBONIZED WALNUT.

X0503
ARTWORK DID: 22186
ART SIZE: 11X11IN
OVERALL SIZE: 12.5X12.5IN
FORMAT: FRAMED WITH NOT MAT.
FRAME: 1A - LARSON-JUHL
CRANBROOK 1 & 2 - 613674 EBONIZED WALNUT.

X0501
ARTWORK DID: 23856
ART SIZE: 60X40IN
OVERALL SIZE: 61X41IN
FORMAT: WRAPPED CANVAS IN FLOAT FRAME.
FRAME: 3A - LARSON-JUHL
CRANBROOK 1 & 2 - 623674 EBONIZED WALNUT.

X0506
ARTWORK DID: 22185
ART SIZE: 11X11IN
OVERALL SIZE: 12.5X12.5IN
FORMAT: FRAMED WITH NOT MAT.
FRAME: 1A - LARSON-JUHL
CRANBROOK 1 & 2 - 613674 EBONIZED WALNUT.

X0507
ARTWORK DID:19839
ART SIZE: 12X9IN
OVERALL SIZE: 23.5X16.5IN
FORMAT: FRAMED AND MATTED.
FRAME: 1A - LARSON-JUHL
CRANBROOK 1 & 2 -613674 EBONIZED WALNUT.

X0504
ARTWORK DID:19178
ART SIZE: 9X7IN
OVERALL SIZE: 10.5X8.5IN
FORMAT: FRAMED WITH NOT MAT.
FRAME: 1A - LARSON-JUHL
CRANBROOK 1 & 2 - 613674 EBONIZED WALNUT.

X0502
ARTWORK DID:17219
ART SIZE: 10X17IN
OVERALL SIZE: 17.5X28.5IN
FORMAT: FRAMED AND MATTED.
FRAME: 1A - LARSON-JUHL
CRANBROOK 1 & 2 -613674 EBONIZED WALNUT.

X0508
ARTWORK DID:16992
ART SIZE: 9X7IN
OVERALL SIZE: 10.5X8.5IN
FORMAT: FRAMED WITH NOT MAT.
FRAME: 1A - LARSON-JUHL
CRANBROOK 1 & 2 - 613674 EBONIZED WALNUT.

X0509
ARTWORK DID: 16787
ART SIZE: 11X11IN
OVERALL SIZE: 12.5X12.5IN
FORMAT: FRAMED WITH NOT MAT.
FRAME: 1A - LARSON-JUHL
CRANBROOK 1 & 2 - 613674 EBONIZED WALNUT.

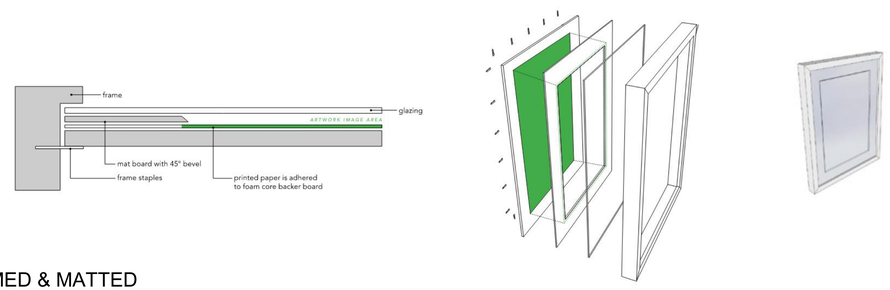

FRAMED & MATTED

Scale: 1" = 1'-0"

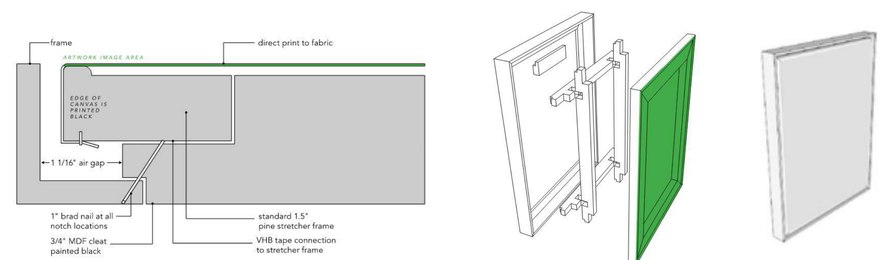

WRAPPED CANVAS IN FLOAT FRAME

Scale: 1" = 1'-0"

PERMIT SET - FOR CONSTRUCTION USE

© 2022 STARBUCKS COFFEE COMPANY

STARBUCKS®
2401 UTAH AVENUE SOUTH
SEATTLE, WASHINGTON 98134
(206) 318-1575

THESE DRAWINGS AND THE PROJECT MANUAL ARE CONFIDENTIAL AND SHALL REMAIN THE SOLE PROPERTY OF STARBUCKS CORPORATION, WHICH IS THE OWNER OF THE COPYRIGHT IN THIS WORK. THEY SHALL NOT BE REPRODUCED (IN WHOLE OR IN PART), SHARED WITH THIRD PARTIES OR USED IN ANY MANNER ON OTHER PROJECTS OR EXTENSIONS TO THIS PROJECT WITHOUT THE PRIOR WRITTEN CONSENT OF STARBUCKS CORPORATION. THESE DRAWINGS AND SPECIFICATIONS ARE INTENDED TO EXPRESS DESIGN INTENT FOR A PROTOTYPICAL STARBUCKS STORE (WHICH IS SUBJECT TO CHANGE AT ANYTIME) AND DO NOT REFLECT ACTUAL SITE CONDITIONS. NEITHER PARTY SHALL HAVE ANY OBLIGATION NOR LIABILITY TO THE OTHER (EXCEPT STATED ABOVE) UNTIL A WRITTEN AGREEMENT IS FULLY EXECUTED BY BOTH PARTIES.

STARBUCKS TEMPLATE VERSION: i2023.04.24

PABLO GARCIA, AIA, REG. FL NO. AR99297

Gensler
MAIN OFFICE
M. ARTHUR GENSLER JR. & ASSOCIATES
220 MONTGOMERY STREET, SUITE 200
SAN FRANCISCO, CA 94104 USA
Tel (415) 433.3700
Fax (415) 836.4599

SATELLITE OFFICE
M. ARTHUR GENSLER JR. & ASSOCIATES
FL QUALIFIER'S LIC. NO: AR96486
545 NW 26TH ST
SUITE 250
MIAMI, FL 33127 USA
Tel (305) 350.7070
Fax (305) 350.7071

PROJECT NAME:
ST LUCIE WEST & SW
CASHEMERE BLVD

PROJECT ADDRESS:
920 SW SAINT LUCIE BLVD, PORT
ST.LUCIE, FL 34986

STORE #:	81616
PROJECT #:	101357-001
ISSUE DATE:	07-08-2025
DESIGN MANAGER:	ASHLEY SUEIRAS
PRODUCTION DESIGNER:	GENSLER
CHECKED BY:	GENSLER

Revision Schedule

Rev	Date	By	Description

SHEET TITLE:
ARTWORK

SCALE: AS SHOWN

SHEET NUMBER:
I511

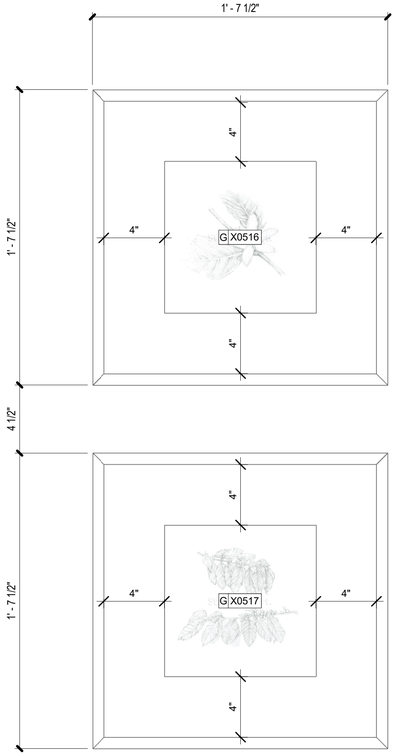

X0516
ARTWORK DID: 16785
ART SIZE: 10X10IN
OVERALL SIZE: 19.5X19.5IN
FORMAT: FLOATED BEHIND GLAZIN WITHOUT MAT.
FRAME: 1A -LARSON-JUHL
CRANBROOK 1 & 2 -613674 EBONIZED WALNUT.

X0517
ARTWORK DID: 16783
ART SIZE: 10X10IN
OVERALL SIZE: 19.5X19.5IN
FORMAT: FLOATED BEHIND GLAZIN WITHOUT MAT.
FRAME: 1A -LARSON-JUHL
CRANBROOK 1 & 2 -613674 EBONIZED WALNUT.

01 ARTWORK DETAIL - X0516 & X0517
Scale: 1 : 5

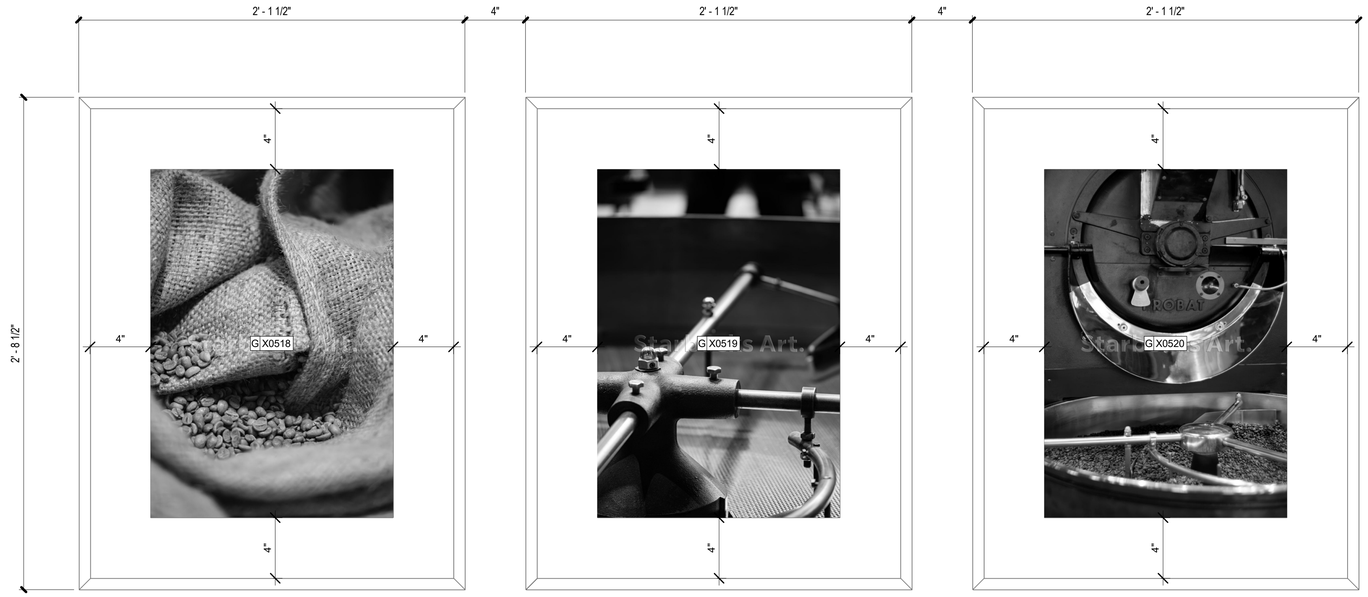

X0518
ARTWORK DID: 24448 -
ART SIZE: 16X23IN -
OVERALL SIZE: 25.5X32.5IN
FORMAT: FRAMED AND MATTED.
FRAME:1A - LARSON-JUHL -
CRANBROOK 1 & 2 -613674 EBONIZED WALNUT.

X0519
ARTWORK DID: 24446
ART SIZE: 16X23IN
OVERALL SIZE: 25.5X32.5IN
FORMAT: FRAMED AND MATTED.
FRAME:1A - LARSON-JUHL
CRANBROOK 1 & 2 -613674 EBONIZED WALNUT.

X0520
ARTWORK DID: 24442
ART SIZE: 16X23IN
OVERALL SIZE: 25.5X32.5IN
FORMAT: FRAMED AND MATTED.
FRAME: 1A - LARSON-JUHL
CRANBROOK 1 & 2 -613674 EBONIZED WALNUT.

02 ARTWORK DETAIL - X0518, X0519, X0520
Scale: 1 : 5

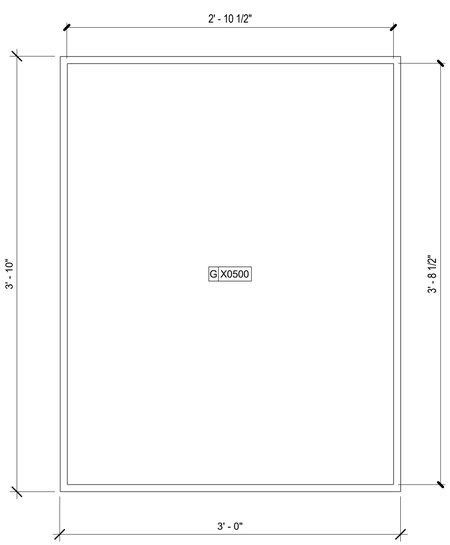

X0500
COMMUNITY BOARD MAGNETIC -
OVERALL SIZE 36X46IN
FRAME: 1A - LARSON-JUHL
CRANBROOK 1 & 2 - 613674 EBONIZED WALNUT.

03 COMMUNITY BOARD DETAIL - X0500
Scale: 1 1/2" = 1'-0"

PERMIT SET - FOR CONSTRUCTION USE

© 2022 STARBUCKS COFFEE COMPANY

STARBUCKS®
2401 UTAH AVENUE SOUTH
SEATTLE, WASHINGTON 98134
(206) 318-1575

THESE DRAWINGS AND THE PROJECT MANUAL ARE CONFIDENTIAL AND SHALL REMAIN THE SOLE PROPERTY OF STARBUCKS CORPORATION, WHICH IS THE OWNER OF THE COPYRIGHT IN THIS WORK. THEY SHALL NOT BE REPRODUCED (IN WHOLE OR IN PART), SHARED WITH THIRD PARTIES OR USED IN ANY MANNER ON OTHER PROJECTS OR EXTENSIONS TO THIS PROJECT WITHOUT THE PRIOR WRITTEN CONSENT OF STARBUCKS CORPORATION. THESE DRAWINGS AND SPECIFICATIONS ARE INTENDED TO EXPRESS DESIGN INTENT FOR A PROTOTYPICAL STARBUCKS STORE (WHICH IS SUBJECT TO CHANGE AT ANYTIME) AND DO NOT REFLECT ACTUAL SITE CONDITIONS. NEITHER PARTY SHALL HAVE ANY OBLIGATION NOR LIABILITY TO THE OTHER (EXCEPT STATED ABOVE) UNTIL A WRITTEN AGREEMENT IS FULLY EXECUTED BY BOTH PARTIES.

STARBUCKS TEMPLATE VERSION: i2023.04.24

PABLO GARCIA, AIA, REG. FL NO. AR99297

Gensler

MAIN OFFICE
M. ARTHUR GENSLER JR. & ASSOCIATES
220 MONTGOMERY STREET, SUITE 200
SAN FRANCISCO, CA 94104 USA
Tel (415) 433.3700
Fax (415) 836.4599

SATELLITE OFFICE
M. ARTHUR GENSLER JR. & ASSOCIATES
FL QUALIFIER'S LIC. NO: AR96486
545 NW 26TH ST
SUITE 250
MIAMI, FL 33127 USA
Tel (305) 350.7070
Fax (305) 350.7071

PROJECT NAME:
ST LUCIE WEST & SW
CASHEMERE BLVD

PROJECT ADDRESS:
920 SW SAINT LUCIE BLVD, PORT
ST.LUCIE, FL 34986

STORE #:	81616
PROJECT #:	101357-001
ISSUE DATE:	07-08-2025
DESIGN MANAGER:	ASHLEY SUEIRAS
PRODUCTION DESIGNER:	GENSLER
CHECKED BY:	GENSLER

Revision Schedule

Rev	Date	By	Description

SHEET TITLE:
ARTWORK

SCALE: AS SHOWN

SHEET NUMBER:
I512

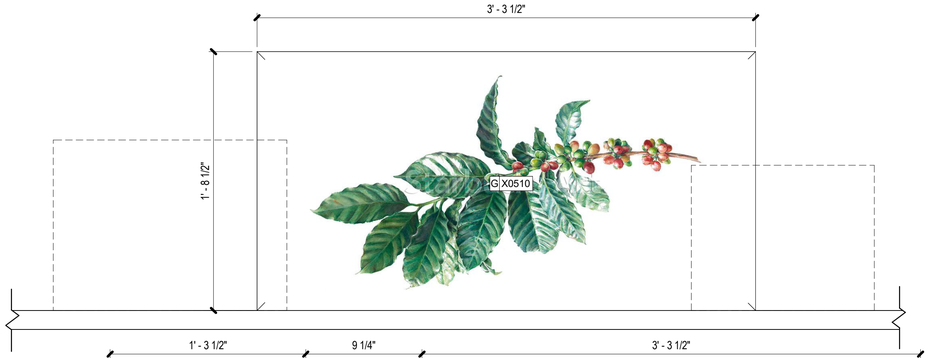

X0510
ARTWORK DID:16789
ART SIZE: 38X19IN
OVERALL SIZE: 39.5X20.5IN
FORMAT: FRAMED WITH NOT MAT.
FRAME: 1A - LARSON-JUHL
CRANBROOK 1 & 2 - 613674 EBONIZED WALNUT.

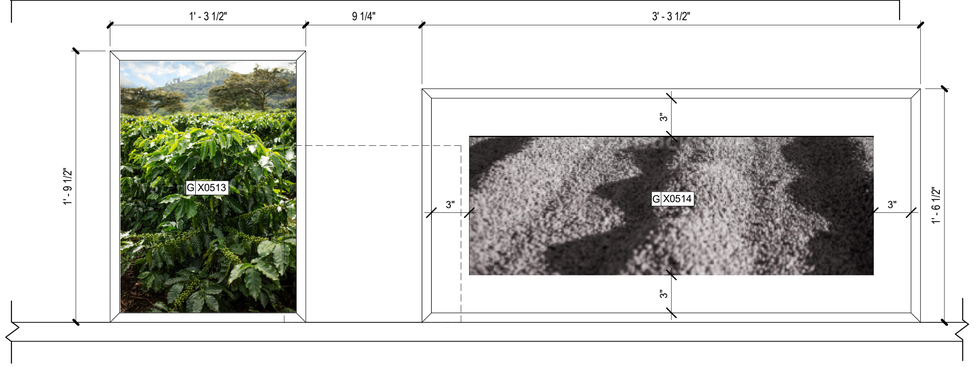

X0513
ARTWORK DID:22094
ART SIZE: 14X20IN
OVERALL SIZE: 15.5X21.5IN
FORMAT: FRAMED WITH NOT MAT.
FRAME: 1A - LARSON-JUHL
CRANBROOK 1 & 2 - 613674 EBONIZED WALNUT

X0514
ARTWORK DID:22143
ART SIZE: 32X11IN
OVERALL SIZE: 39.5X18.5IN
FORMAT: FRAMED AND MATTED.
FRAME: 1B - LARSON-JUHL
CRANBROOK 1 & 2 -613675 NATURAL WALNUT

01 ARTWORK DETAIL - X0510, X0513, X0514
Scale: 1 : 6

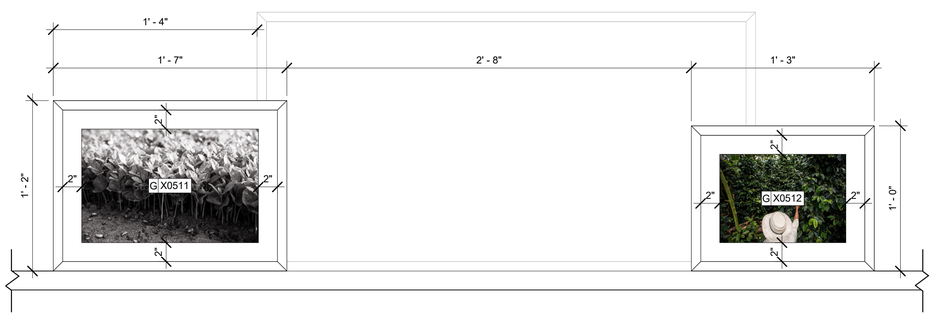

X0511
ARTWORK DID:19838
ART SIZE: 14X9IN
OVERALL SIZE: 18.5X13.5IN
FORMAT: FRAMED WITH MAT.
FRAME: 1A -LARSON-JUHL
CRANBROOK 1 & 2 -613674 EBONIZED WALNUT

X0512
ARTWORK DID:16964
ART SIZE: 10X7IN
OVERALL SIZE: 14.5X11.5IN
FORMAT: FRAMED WITH MAT.
FRAME: 1A -LARSON-JUHL
CRANBROOK 1 & 2 -613674 EBONIZED WALNUT.

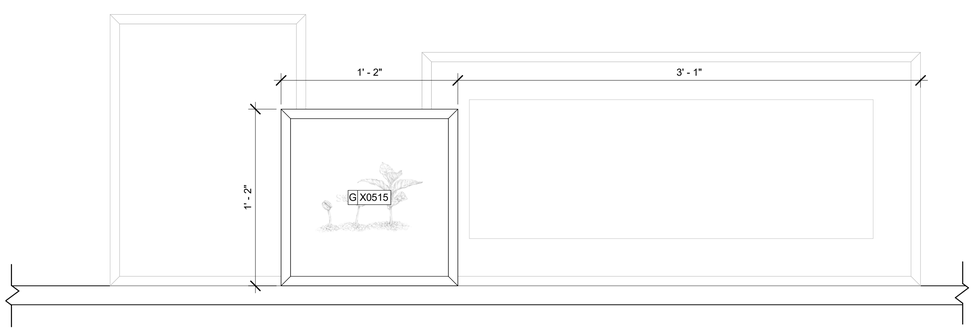

X0515
ARTWORK DID:16780
ART SIZE: 12X12IN - OVERALL
SIZE: 13.5X13.5IN
FORMAT: FRAMED WITH NOT MAT.
FRAME: 1A - LARSON-JUHL
CRANBROOK 1 & 2 - 613674 EBONIZED WALNUT.

02 ARTWORK DETAIL - X0511, X0512, X0515
Scale: 1 : 6

GRAPHICS AND ARTWORK SCHEDULE - "G"

DESIGN ID	COUNT	DESCRIPTION	FURN. BY	INST. BY	COMMENTS
GRAPHICS - ARTWORK					
X0500	1	COMMUNITY BOARD MAGNETIC - 36X46IN 915X1170MM	SB	GC	FRAME: 1A - LARSON-JUHL - CRANBROOK 1 & 2 - 613674 EBONIZED WALNUT.
X0501	1	ARTWORK DID: 23856 - ART SIZE: 60X40IN - OVERALL SIZE: 61X41IN	SB	GC	FORMAT: WRAPPED CANVAS IN FLOAT FRAME. FRAME: 3A - LARSON-JUHL - CRANBROOK 1 & 2 - 623674 EBONIZED WALNUT. REFER TO ART DETAIL.
X0502	1	ARTWORK DID:17219 - ART SIZE: 10X17IN - OVERALL SIZE: 17.5X28.5IN	SB	GC	FORMAT: FRAMED AND MATTED. FRAME: 1A - LARSON-JUHL - CRANBROOK 1 & 2 - 613674 EBONIZED WALNUT. REFER TO ART DETAIL.
X0503	1	ARTWORK DID: 22186 - ART SIZE: 11X11IN - OVERALL SIZE: 12.5X12.5IN	SB	GC	FORMAT: FRAMED WITH NOT MAT. FRAME: 1A - LARSON-JUHL - CRANBROOK 1 & 2 - 613674 EBONIZED WALNUT. REFER TO ART DETAIL.
X0504	1	ARTWORK DID:19178 - ART SIZE: 9X7IN - OVERALL SIZE: 10.5X8.5IN	SB	GC	FORMAT: FRAMED WITH NOT MAT. FRAME: 1A - LARSON-JUHL - CRANBROOK 1 & 2 - 613674 EBONIZED WALNUT. REFER TO ART DETAIL.
X0505	1	ARTWORK DID: 16784 - ART SIZE: 9X11IN - OVERALL SIZE: 10.5X12.5IN	SB	GC	FORMAT: FRAMED WITH NOT MAT. FRAME: 1A - LARSON-JUHL - CRANBROOK 1 & 2 - 613674 EBONIZED WALNUT. REFER TO ART DETAIL.
X0506	1	ARTWORK DID: 22185 - ART SIZE: 11X11IN - OVERALL SIZE: 12.5X12.5IN	SB	GC	FORMAT: FRAMED WITH NOT MAT. FRAME: 1A - LARSON-JUHL - CRANBROOK 1 & 2 - 613674 EBONIZED WALNUT. REFER TO ART DETAIL.
X0507	1	ARTWORK DID:19839 - ART SIZE: 12X9IN - OVERALL SIZE: 23.5X16.5IN	SB	GC	FORMAT: FRAMED AND MATTED. FRAME: 1A - LARSON-JUHL - CRANBROOK 1 & 2 - 613674 EBONIZED WALNUT. REFER TO ART DETAIL.
X0508	1	ARTWORK DID:16992 - ART SIZE: 9X7IN - OVERALL SIZE: 10.5X8.5IN	SB	GC	FORMAT: FRAMED WITH NOT MAT. FRAME: 1A - LARSON-JUHL - CRANBROOK 1 & 2 - 613674 EBONIZED WALNUT. REFER TO ART DETAIL.
X0509	1	ARTWORK DID: 16787 - ART SIZE: 11X11IN - OVERALL SIZE: 12.5X12.5IN	SB	GC	FORMAT: FRAMED WITH NOT MAT. FRAME: 1A - LARSON-JUHL - CRANBROOK 1 & 2 - 613674 EBONIZED WALNUT. REFER TO ART DETAIL.
X0510	1	ARTWORK DID:16789 - ART SIZE: 38X19IN - OVERALL SIZE: 39.5X20.5IN	SB	GC	FORMAT: FRAMED WITH NOT MAT. FRAME: 1A - LARSON-JUHL - CRANBROOK 1 & 2 - 613674 EBONIZED WALNUT. REFER TO ART DETAIL.
X0511	1	ARTWORK DID:19838 - ART SIZE: 14X9IN - OVERALL SIZE: 18.5X13.5IN	SB	GC	FORMAT: FRAMED WITH MAT. FRAME: 1A - LARSON-JUHL - CRANBROOK 1 & 2 - 613674 EBONIZED WALNUT. REFER TO ART DETAIL.
X0512	1	ARTWORK DID:16964 - ART SIZE: 10X7IN - OVERALL SIZE: 14.5X11.5IN	SB	GC	FORMAT: FRAMED WITH MAT. FRAME: 1A - LARSON-JUHL - CRANBROOK 1 & 2 - 613674 EBONIZED WALNUT. REFER TO ART DETAIL.
X0513	1	ARTWORK DID:22094 - ART SIZE: 14X20IN - OVERALL SIZE: 15.5X21.5IN	SB	GC	FORMAT: FRAMED WITH NOT MAT. FRAME: 1A - LARSON-JUHL - CRANBROOK 1 & 2 - 613674 EBONIZED WALNUT. REFER TO ART DETAIL.
X0514	1	ARTWORK DID:22143 - ART SIZE: 32X11IN - OVERALL SIZE: 39.5X18.5IN	SB	GC	FORMAT: FRAMED AND MATTED. FRAME: 1B - LARSON-JUHL - CRANBROOK 1 & 2 - 613675 NATURAL WALNUT. REFER TO ART DETAIL.
X0515	1	ARTWORK DID:16780 - ART SIZE: 12X12IN - OVERALL SIZE: 13.5X13.5IN	SB	GC	FORMAT: FRAMED WITH NOT MAT. FRAME: 1A - LARSON-JUHL - CRANBROOK 1 & 2 - 613674 EBONIZED WALNUT. REFER TO ART DETAIL.
X0516	1	ARTWORK DID: 16785 - ART SIZE: 10X10IN - OVERALL SIZE: 19.5X19.5IN	SB	GC	FORMAT: FLOATED BEHIND GLAZIN WITHOUT MAT. FRAME: 1A - LARSON-JUHL - CRANBROOK 1 & 2 - 613674 EBONIZED WALNUT. REFER TO ART DETAIL.
X0517	1	ARTWORK DID: 16783 - ART SIZE: 10X10IN - OVERALL SIZE: 19.5X19.5IN	SB	GC	FORMAT: FLOATED BEHIND GLAZIN WITHOUT MAT. FRAME: 1A - LARSON-JUHL - CRANBROOK 1 & 2 - 613674 EBONIZED WALNUT. REFER TO ART DETAIL.
X0518	1	ARTWORK DID: 24448 - ART SIZE: 16X23IN - OVERALL SIZE: 25.5X32.5IN	SB	GC	FORMAT: FRAMED AND MATTED. FRAME: 1A - LARSON-JUHL - CRANBROOK 1 & 2 - 613674 EBONIZED WALNUT. REFER TO ART DETAIL.
X0519	1	ARTWORK DID: 24446 - ART SIZE: 16X23IN - OVERALL SIZE: 25.5X32.5IN	SB	GC	FORMAT: FRAMED AND MATTED. FRAME: 1A - LARSON-JUHL - CRANBROOK 1 & 2 - 613674 EBONIZED WALNUT. REFER TO ART DETAIL.
X0520	1	ARTWORK DID: 24442 - ART SIZE: 16X23IN - OVERALL SIZE: 25.5X32.5IN	SB	GC	FORMAT: FRAMED AND MATTED. FRAME: 1A - LARSON-JUHL - CRANBROOK 1 & 2 - 613674 EBONIZED WALNUT. REFER TO ART DETAIL.
GRAPHICS - OTHER					
19778	1	RESTROOM SIGN MEN ACCESSIBLE	SB	GC	
19779	1	RESTROOM SIGN WOMEN ACCESSIBLE	SB	GC	
23136	1	AUTOMATIC DOOR CAUTION SIGNAGE	SB	GC	
X0802	1	ADA COMPLIANT HANDICAP ACCESSIBLE SIGN WITH BRAILLE - 6X9IN 152X228MM	SB	GC	FRAMELESS WITH SQUARE CORNERS, FINISH: BLACK WITH SILVER LETTERING. MOUNTING: 3M CLEAR TAPE FOR GLASS & SMOOTH FINISHES OR FOAM TAPE FOR SOLID SURFACES. REFER TO DETAIL ON SHEET G004.

PERMIT SET - FOR CONSTRUCTION USE

© 2022 STARBUCKS COFFEE COMPANY

STARBUCKS®
2401 UTAH AVENUE SOUTH
SEATTLE, WASHINGTON 98134
(206) 318-1575

THESE DRAWINGS AND THE PROJECT MANUAL ARE CONFIDENTIAL AND SHALL REMAIN THE SOLE PROPERTY OF STARBUCKS CORPORATION, WHICH IS THE OWNER OF THE COPYRIGHT IN THIS WORK. THEY SHALL NOT BE REPRODUCED (IN WHOLE OR IN PART), SHARED WITH THIRD PARTIES OR USED IN ANY MANNER ON OTHER PROJECTS OR EXTENSIONS TO THIS PROJECT WITHOUT THE PRIOR WRITTEN CONSENT OF STARBUCKS CORPORATION. THESE DRAWINGS AND SPECIFICATIONS ARE INTENDED TO EXPRESS DESIGN INTENT FOR A PROTOTYPICAL STARBUCKS STORE (WHICH IS SUBJECT TO CHANGE AT ANYTIME) AND DO NOT REFLECT ACTUAL SITE CONDITIONS. NEITHER PARTY SHALL HAVE ANY OBLIGATION NOR LIABILITY TO THE OTHER (EXCEPT STATED ABOVE) UNTIL A WRITTEN AGREEMENT IS FULLY EXECUTED BY BOTH PARTIES.

STARBUCKS TEMPLATE VERSION: i2023.04.24

PABLO GARCIA, AIA, REG. FL NO. AR99297

Gensler

MAIN OFFICE
M. ARTHUR GENSLER JR. & ASSOCIATES
220 MONTGOMERY STREET, SUITE 200
SAN FRANCISCO, CA 94104 USA
Tel (415) 433.3700
Fax (415) 836.4599

SATELLITE OFFICE
M. ARTHUR GENSLER JR. & ASSOCIATES
FL QUALIFIER'S LIC. NO: AR96486
545 NW 26TH ST
SUITE 250
MIAMI, FL 33127 USA
Tel (305) 350.7070
Fax (305) 350.7071

PROJECT NAME:
ST LUCIE WEST & SW
CASHEMERE BLVD

PROJECT ADDRESS:
920 SW SAINT LUCIE BLVD, PORT
ST.LUCIE, FL 34986

STORE #: 81616
PROJECT #: 101357-001
ISSUE DATE: 07-08-2025
DESIGN MANAGER: ASHLEY SUEIRAS
PRODUCTION DESIGNER: GENSLER
CHECKED BY: GENSLER

Revision Schedule

Rev	Date	By	Description

SHEET TITLE:
ARTWORK

SCALE: AS SHOWN

SHEET NUMBER:
I513

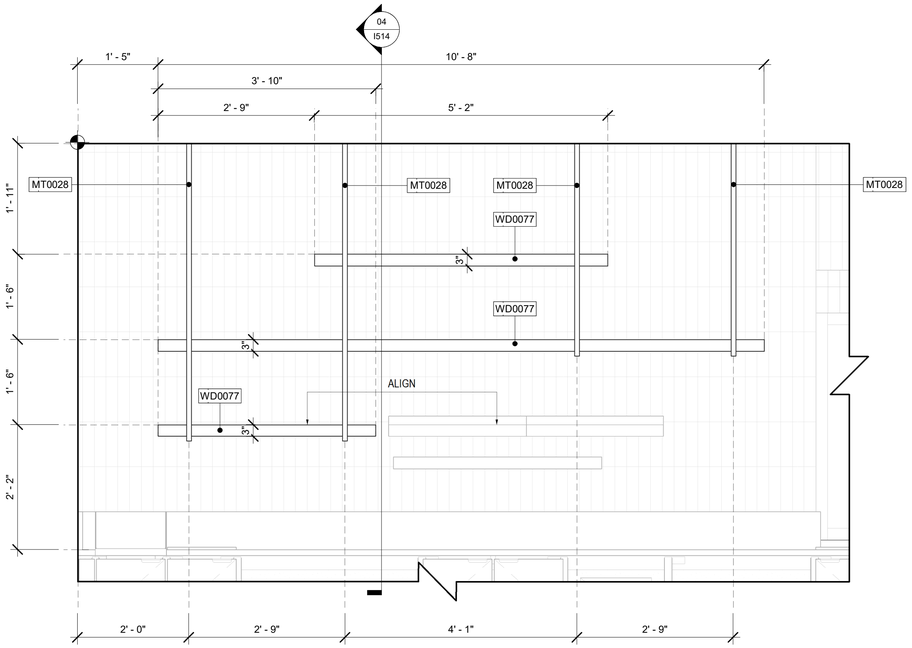

01 CUSTOM CBE SHELVES ELEVATION - DID X0012
Scale: 3/4" = 1'-0"

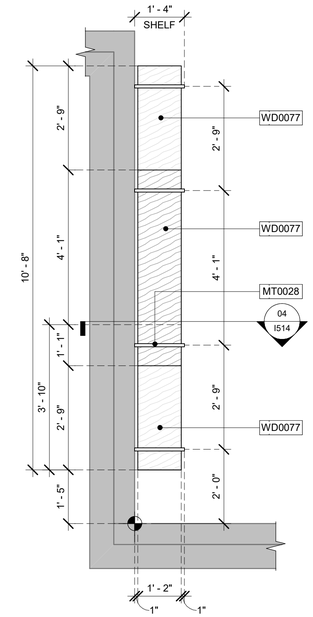

02 CUSTOM CBE SHELVES PLAN - DID X0012
Scale: 1/2" = 1'-0"

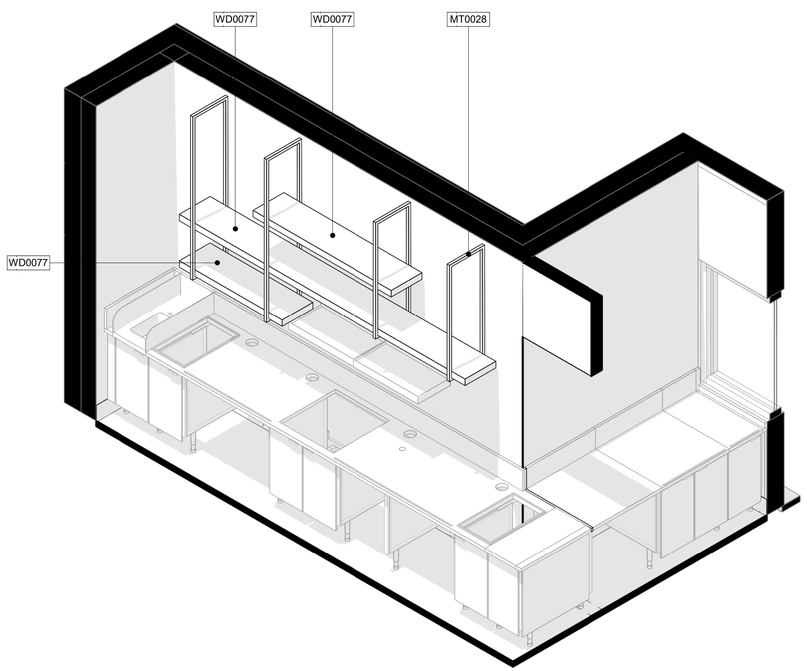

03 CUSTOM CBE SHELVES 3D - DID X0012
Scale:

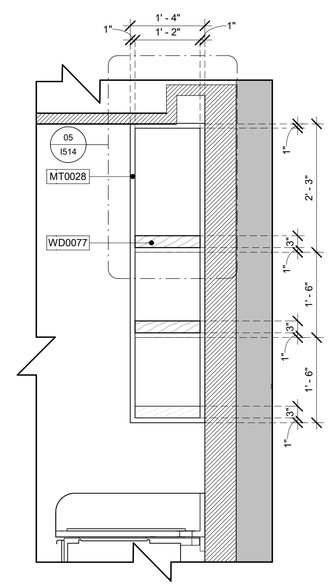

04 CUSTOM CBE SHELVES SECTION - DID X0012
Scale: 3/4" = 1'-0"

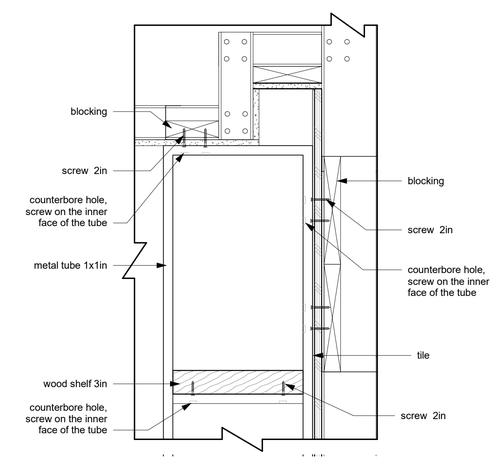

05 CUSTOM CBE SHELVES ATTACHMENT - DID X0012
Scale: 1 1/2" = 1'-0"

PERMIT SET - FOR CONSTRUCTION USE

© 2022 STARBUCKS COFFEE COMPANY

STARBUCKS®
2401 UTAH AVENUE SOUTH
SEATTLE, WASHINGTON 98134
(206) 318-1575

THESE DRAWINGS AND THE PROJECT MANUAL ARE CONFIDENTIAL AND SHALL REMAIN THE SOLE PROPERTY OF STARBUCKS CORPORATION, WHICH IS THE OWNER OF THE COPYRIGHT IN THIS WORK. THEY SHALL NOT BE REPRODUCED (IN WHOLE OR IN PART), SHARED WITH THIRD PARTIES OR USED IN ANY MANNER ON OTHER PROJECTS OR EXTENSIONS TO THIS PROJECT WITHOUT THE PRIOR WRITTEN CONSENT OF STARBUCKS CORPORATION. THESE DRAWINGS AND SPECIFICATIONS ARE INTENDED TO EXPRESS DESIGN INTENT FOR A PROTOTYPICAL STARBUCKS STORE (WHICH IS SUBJECT TO CHANGE AT ANYTIME) AND DO NOT REFLECT ACTUAL SITE CONDITIONS. NEITHER PARTY SHALL HAVE ANY OBLIGATION NOR LIABILITY TO THE OTHER (EXCEPT STATED ABOVE) UNTIL A WRITTEN AGREEMENT IS FULLY EXECUTED BY BOTH PARTIES.

STARBUCKS TEMPLATE VERSION: i2023.04.24

PABLO GARCIA, AIA, REG. FL NO. AR99297

Gensler
MAIN OFFICE
M. ARTHUR GENSLER JR. & ASSOCIATES
220 MONTGOMERY STREET, SUITE 200
SAN FRANCISCO, CA 94104 USA
Tel (415) 433.3700
Fax (415) 836.4599

SATELLITE OFFICE
M. ARTHUR GENSLER JR. & ASSOCIATES
FL QUALIFIER'S LIC. NO: AR96486
545 NW 26TH ST
SUITE 250
MIAMI, FL 33127 USA
Tel (305) 350.7070
Fax (305) 350.7071

PROJECT NAME:
ST LUCIE WEST & SW CASHEMERE BLVD

PROJECT ADDRESS:
920 SW SAINT LUCIE BLVD, PORT ST.LUCIE, FL 34986

STORE #:	81616
PROJECT #:	101357-001
ISSUE DATE:	07-08-2025
DESIGN MANAGER:	ASHLEY SUEIRAS
PRODUCTION DESIGNER:	GENSLER
CHECKED BY:	GENSLER

Revision Schedule

Rev	Date	By	Description

SHEET TITLE:
CUSTOM CBE SHELVES

SCALE: AS SHOWN

SHEET NUMBER:
I514

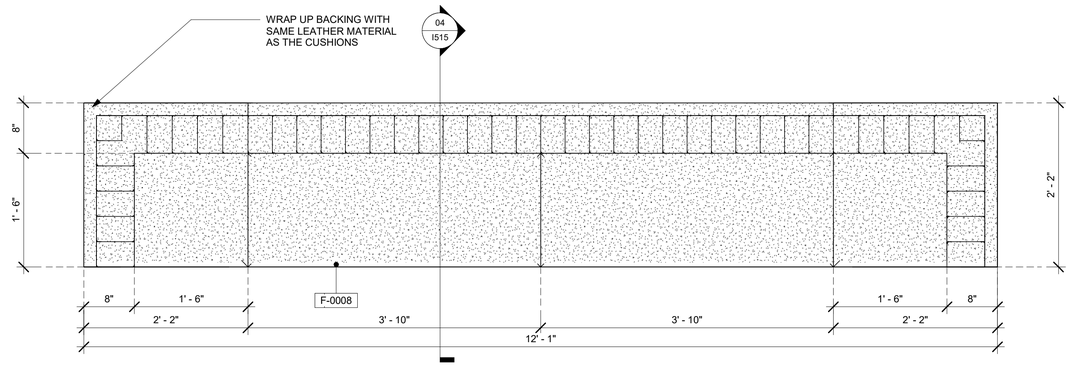

01 CUSTOM BANQUETTE PLAN

Scale: 1" = 1'-0"

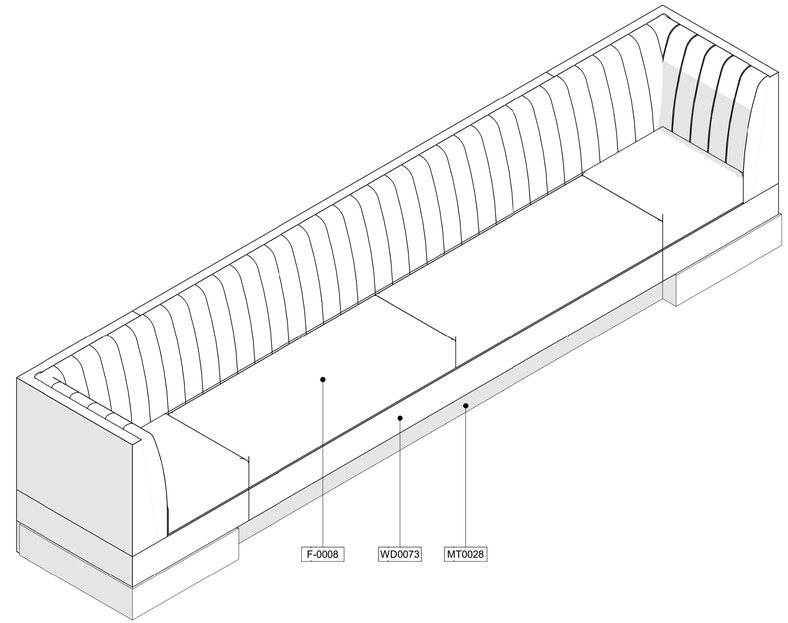

02 CUSTOM BANQUETTE 3D

Scale:

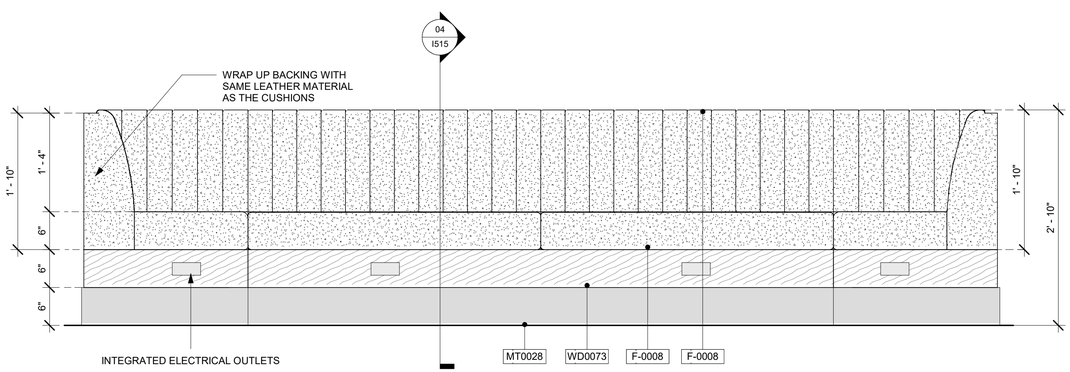

03 CUSTOM BANQUETTE ELEVATION

Scale: 1" = 1'-0"

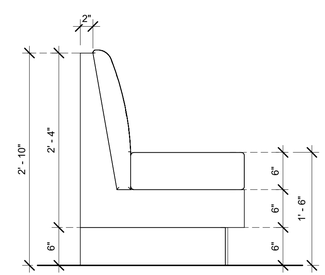

04 CUSTOM BANQUETTE SECTION

Scale: 1" = 1'-0"

PERMIT SET - FOR CONSTRUCTION USE

© 2022 STARBUCKS COFFEE COMPANY

STARBUCKS®
2401 UTAH AVENUE SOUTH
SEATTLE, WASHINGTON 98134
(206) 318-1575

THESE DRAWINGS AND THE PROJECT MANUAL ARE CONFIDENTIAL AND SHALL REMAIN THE SOLE PROPERTY OF STARBUCKS CORPORATION, WHICH IS THE OWNER OF THE COPYRIGHT IN THIS WORK. THEY SHALL NOT BE REPRODUCED (IN WHOLE OR IN PART), SHARED WITH THIRD PARTIES OR USED IN ANY MANNER ON OTHER PROJECTS OR EXTENSIONS TO THIS PROJECT WITHOUT THE PRIOR WRITTEN CONSENT OF STARBUCKS CORPORATION. THESE DRAWINGS AND SPECIFICATIONS ARE INTENDED TO EXPRESS DESIGN INTENT FOR A PROTOTYPICAL STARBUCKS STORE (WHICH IS SUBJECT TO CHANGE AT ANYTIME) AND DO NOT REFLECT ACTUAL SITE CONDITIONS. NEITHER PARTY SHALL HAVE ANY OBLIGATION NOR LIABILITY TO THE OTHER (EXCEPT STATED ABOVE) UNTIL A WRITTEN AGREEMENT IS FULLY EXECUTED BY BOTH PARTIES.

STARBUCKS TEMPLATE VERSION: i2023.04.24

PABLO GARCIA, AIA, REG. FL NO. AR99297

Gensler

MAIN OFFICE
M. ARTHUR GENSLER JR. & ASSOCIATES
220 MONTGOMERY STREET, SUITE 200
SAN FRANCISCO, CA 94104 USA
Tel (415) 433.3700
Fax (415) 836.4599

SATELLITE OFFICE
M. ARTHUR GENSLER JR. & ASSOCIATES
FL QUALIFIER'S LIC. NO: AR96486
545 NW 26TH ST
SUITE 250
MIAMI, FL 33127 USA
Tel (305) 350.7070
Fax (305) 350.7071

PROJECT NAME:
ST LUCIE WEST & SW
CASHEMERE BLVD

PROJECT ADDRESS:
920 SW SAINT LUCIE BLVD, PORT
ST.LUCIE, FL 34986

STORE #:	81616
PROJECT #:	101357-001
ISSUE DATE:	07-08-2025
DESIGN MANAGER:	ASHLEY SUEIRAS
PRODUCTION DESIGNER:	GENSLER
CHECKED BY:	GENSLER

Revision Schedule

Rev	Date	By	Description

SHEET TITLE:
CUSTOM BANQUETTE

SCALE: AS SHOWN

SHEET NUMBER:
I515

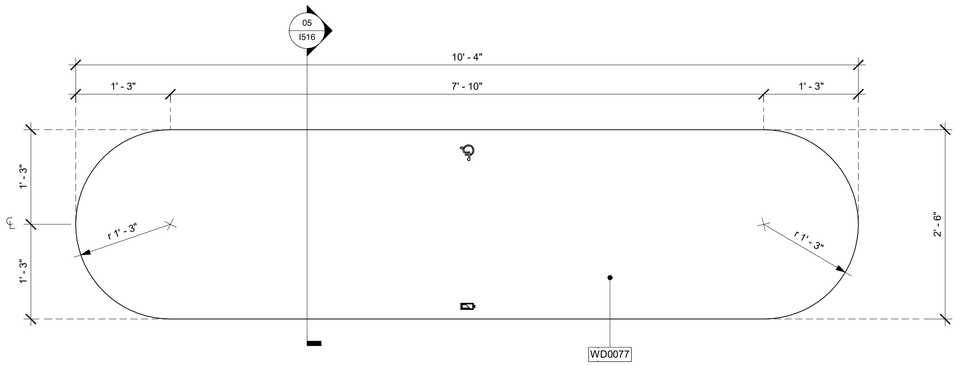

01 CUSTOM COMMUNITY TABLE TOP PLAN - DID X18404

Scale: 1" = 1'-0"

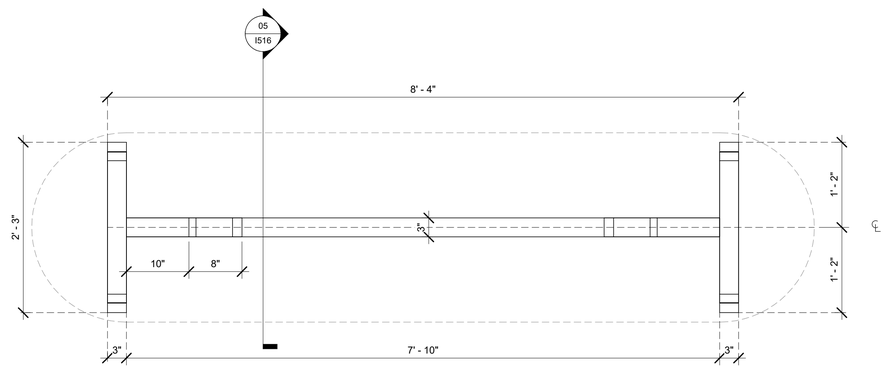

02 CUSTOM COMMUNITY TABLE BASE PLAN - DID X18404

Scale: 1" = 1'-0"

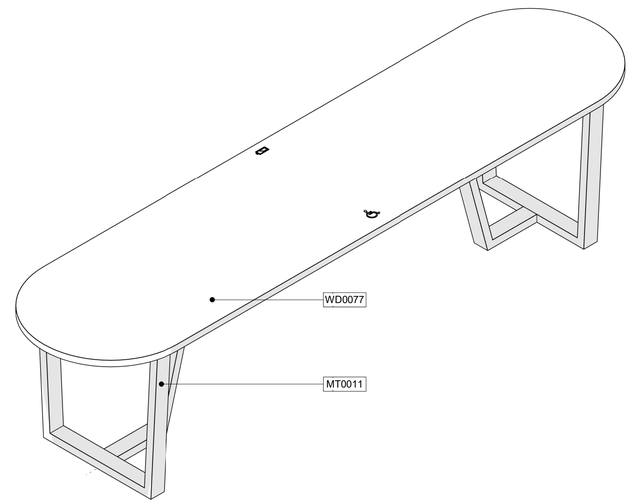

03 CUSTOM COMMUNITY TABLE 3D - DID X18404

Scale:

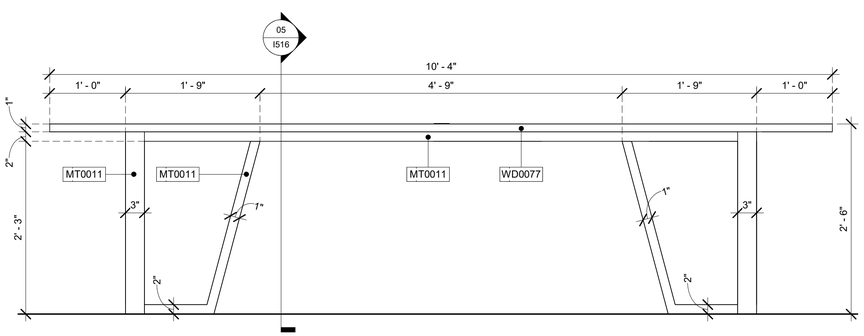

04 CUSTOM COMMUNITY TABLE ELEVATION - DID X18404

Scale: 1" = 1'-0"

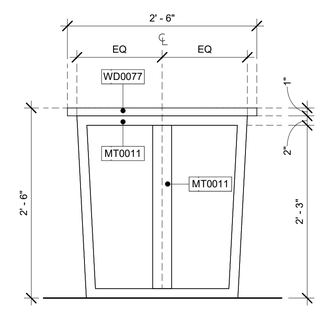

05 CUSTOM COMMUNITY TABLE SECTION - DID X18404

Scale: 1" = 1'-0"

PERMIT SET - FOR CONSTRUCTION USE

© 2022 STARBUCKS COFFEE COMPANY

STARBUCKS®
2401 UTAH AVENUE SOUTH
SEATTLE, WASHINGTON 98134
(206) 318-1575

THESE DRAWINGS AND THE PROJECT MANUAL ARE CONFIDENTIAL AND SHALL REMAIN THE SOLE PROPERTY OF STARBUCKS CORPORATION, WHICH IS THE OWNER OF THE COPYRIGHT IN THIS WORK. THEY SHALL NOT BE REPRODUCED (IN WHOLE OR IN PART), SHARED WITH THIRD PARTIES OR USED IN ANY MANNER ON OTHER PROJECTS OR EXTENSIONS TO THIS PROJECT WITHOUT THE PRIOR WRITTEN CONSENT OF STARBUCKS CORPORATION. THESE DRAWINGS AND SPECIFICATIONS ARE INTENDED TO EXPRESS DESIGN INTENT FOR A PROTOTYPICAL STARBUCKS STORE (WHICH IS SUBJECT TO CHANGE AT ANYTIME) AND DO NOT REFLECT ACTUAL SITE CONDITIONS. NEITHER PARTY SHALL HAVE ANY OBLIGATION NOR LIABILITY TO THE OTHER (EXCEPT STATED ABOVE) UNTIL A WRITTEN AGREEMENT IS FULLY EXECUTED BY BOTH PARTIES.

STARBUCKS TEMPLATE VERSION: i2023.04.24

PABLO GARCIA, AIA, REG. FL NO. AR99297

Gensler

MAIN OFFICE
M. ARTHUR GENSLER JR. & ASSOCIATES
220 MONTGOMERY STREET, SUITE 200
SAN FRANCISCO, CA 94104 USA
Tel (415) 433.3700
Fax (415) 836.4599

SATELLITE OFFICE
M. ARTHUR GENSLER JR. & ASSOCIATES
FL QUALIFIER'S LIC. NO. AR96486
545 NW 26TH ST
SUITE 250
MIAMI, FL 33127 USA
Tel (305) 350.7070
Fax (305) 350.7071

PROJECT NAME:
ST LUCIE WEST & SW CASHEMERE BLVD

PROJECT ADDRESS:
920 SW SAINT LUCIE BLVD, PORT ST.LUCIE, FL 34986

STORE #:	81616
PROJECT #:	101357-001
ISSUE DATE:	07-08-2025
DESIGN MANAGER:	ASHLEY SUEIRAS
PRODUCTION DESIGNER:	GENSLER
CHECKED BY:	GENSLER

Revision Schedule

Rev	Date	By	Description

SHEET TITLE:
CUSTOM COMMUNITY TABLE
SCALE: AS SHOWN

SHEET NUMBER:
I516

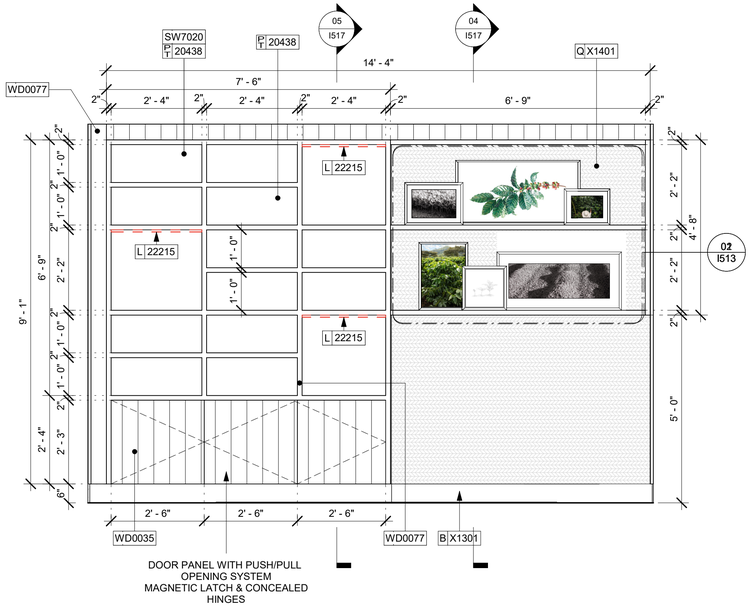

01 CUSTOM MERCH SHELVES SYSTEM ELEVATION - DID X009

Scale: 1/2" = 1'-0"

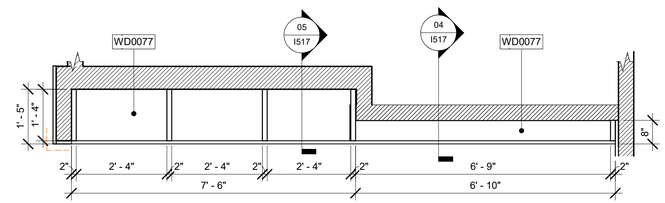

02 CUSTOM MERCH SHELVES SYSTEM ENLARGED PLAN - DID X009

Scale: 1/2" = 1'-0"

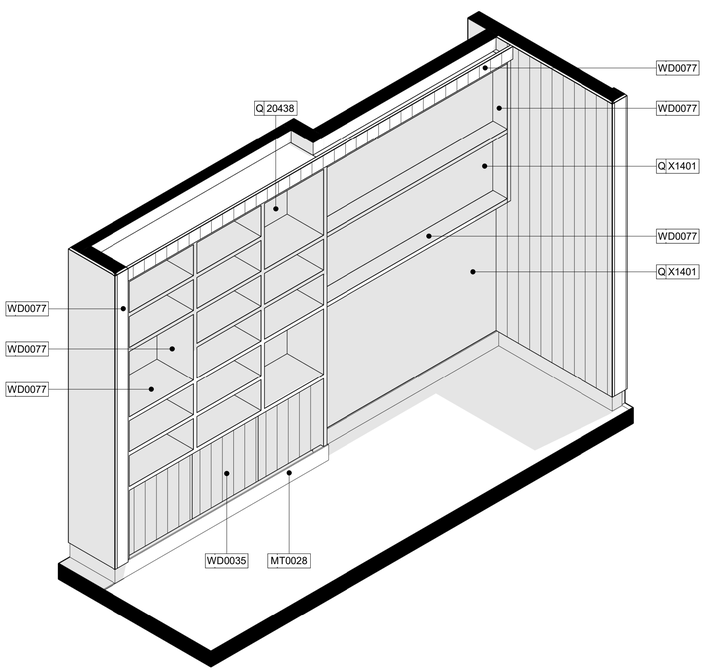

03 MERCH SYSTEM - DID X0009 - 3D VIEW

Scale:

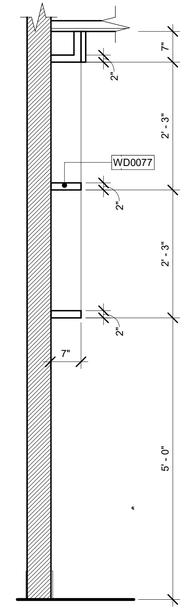

04 MERCH SYSTEM - DID X009 - SECTION A

Scale: 3/4" = 1'-0"

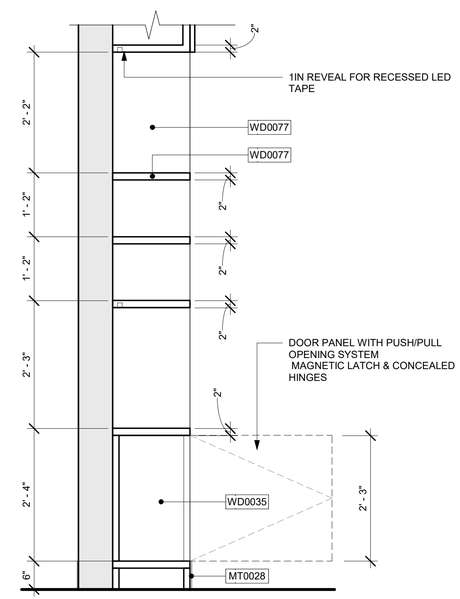

05 MERCH SYSTEM - DID X009 - SECTION B

Scale: 3/4" = 1'-0"

PERMIT SET - FOR CONSTRUCTION USE

© 2022 STARBUCKS COFFEE COMPANY

STARBUCKS®
2401 UTAH AVENUE SOUTH
SEATTLE, WASHINGTON 98134
(206) 318-1575

THESE DRAWINGS AND THE PROJECT MANUAL ARE CONFIDENTIAL AND SHALL REMAIN THE SOLE PROPERTY OF STARBUCKS CORPORATION, WHICH IS THE OWNER OF THE COPYRIGHT IN THIS WORK. THEY SHALL NOT BE REPRODUCED (IN WHOLE OR IN PART), SHARED WITH THIRD PARTIES OR USED IN ANY MANNER ON OTHER PROJECTS OR EXTENSIONS TO THIS PROJECT WITHOUT THE PRIOR WRITTEN CONSENT OF STARBUCKS CORPORATION. THESE DRAWINGS AND SPECIFICATIONS ARE INTENDED TO EXPRESS DESIGN INTENT FOR A PROTOTYPICAL STARBUCKS STORE (WHICH IS SUBJECT TO CHANGE AT ANYTIME) AND DO NOT REFLECT ACTUAL SITE CONDITIONS. NEITHER PARTY SHALL HAVE ANY OBLIGATION NOR LIABILITY TO THE OTHER (EXCEPT STATED ABOVE) UNTIL A WRITTEN AGREEMENT IS FULLY EXECUTED BY BOTH PARTIES.

STARBUCKS TEMPLATE VERSION: i2023.04.24

PABLO GARCIA, AIA, REG. FL NO. AR99297

Gensler

MAIN OFFICE
M. ARTHUR GENSLER JR. & ASSOCIATES
220 MONTGOMERY STREET, SUITE 200
SAN FRANCISCO, CA 94104 USA
Tel (415) 433.3700
Fax (415) 836.4599

SATELLITE OFFICE
M. ARTHUR GENSLER JR. & ASSOCIATES
FL QUALIFIER'S LIC. NO. AR96486
543 NW 36TH ST
SUITE 250
MIAMI, FL 33127 USA
Tel (305) 350.7070
Fax (305) 350.7071

PROJECT NAME:
ST LUCIE WEST & SW
CASHEMERE BLVD

PROJECT ADDRESS:
920 SW SAINT LUCIE BLVD, PORT
ST.LUCIE, FL 34986

STORE #:	81616
PROJECT #:	101357-001
ISSUE DATE:	07-08-2025
DESIGN MANAGER:	ASHLEY SUEIRAS
PRODUCTION DESIGNER:	GENSLER
CHECKED BY:	GENSLER

Revision Schedule

Rev	Date	By	Description

SHEET TITLE:
CUSTOM MERCH

SCALE: AS SHOWN

SHEET NUMBER:
I517

CASEWORK SCHEDULE - "C"

DESIGN ID	COUNT	DESCRIPTION	FURN. BY	INST. BY	COMMENTS
X0003	3	MAD100 V FULL PLANKS - WALNUT WD0077	SB	GC	
X0004	1	WOOD TRIM - 6X1IN 127X25MM (V.I.F.) - WALNUT WD0077	SB	GC	LENGTH REQUIRED (V.I.F)
X0005	4	WOOD TRIM - 6X1IN 127X25MM (V.I.F.) - WALNUT WD0077	SB	GC	LENGTH REQUIRED (V.I.F)
X0006	1	CUSTOM SLATS 1X1IN - BLACK WD0035	SB	GC	
X0009	1	CUSTOM BOOK SHELF	SB	GC	REFER TO DETAIL
X0010	2	WOOD TRIM - 6X1IN 127X25MM (V.I.F.) - BLACK WD0035	SB	GC	LENGTH REQUIRED (V.I.F)
X0015	1	WOOD TRIM - 6X1IN 127X25MM (V.I.F.) - WALNUT WD0077	SB	GC	LENGTH REQUIRED (V.I.F)
X0016	1	WOOD TRIM - 6X1IN 127X25MM (V.I.F.) - WALNUT WD0077	SB	GC	LENGTH REQUIRED (V.I.F)
CABINET					
17580	2	CABINET - CBE TEA SHELF - 29IN 735MM - FLAT BLACK MT0028	SB	GC	
21894	9	CABINET - DOOR - 15IN 380MM	SB	GC	
21895	4	CABINET - DOOR TRASH - 15IN 380MM	SB	GC	
21896	1	CABINET - DRAWER - 15IN 380MM	SB	GC	
21905	3	CABINET - DOOR - 30IN 760MM	SB	GC	
21906	1	CABINET - END CAP FRONTBAR	SB	GC	
21907	3	CABINET - END CAP BACKBAR	SB	GC	
21908	3	CABINET - FILLER PANEL - VARIABLE LENGTH	SB	GC	
21909	1	CABINET - DT POS UPPER CUBBY - 32IN 815MM	SB	GC	
21910	1	CABINET - FRENCH CLEAT - VARIABLE LENGTH	SB	GC	DESIGNER TO VERIFY QUANTITY, PROVIDE OVERALL LENGTH REQUIRED.
21913	2	CABINET - EQUIPMENT MOUNTING PANEL	SB	GC	
22632	1	CABINET - CBE DRY INCLUSION SHELF - 44IN 1120MM - FLAT BLACK MT0028	SB	GC	
22749	1	CABINET - ESPRESSO PUMP MOUNT PANEL	SB	GC	
22986	3	CABINET - DELIVERY DRAWER - 15IN 380MM	SB	GC	
24517	18	CABINET - ADJUSTABLE SHELF - 15IN 380MM	SB	GC	
24520	14	CABINET - ADJUSTABLE SHELF - 30IN 760MM	SB	GC	
24525	9	CABINET - BACK PANEL - 15IN 380MM	SB	GC	
24527	2	CABINET - BACK PANEL - 30IN 760MM	SB	GC	
24531	3	CABINET - BACK PANEL FOR POS - 30IN 760MM	SB	GC	
24548	2	CABINET - ESPRESSO ICE BIN - 20IN 510MM	SB	GC	
X0002	1	CUSTOM CABINET - BACKBAR CORNER - VARIABLE LENGTH	SB	GC	
X0012	1	CABINET - CBE TEA SHELF - 29IN 735MM - FLAT BLACK MT0028	SB	GC	
CAFE					
23963	1	WASTE AND RECYCLE STATION THREE DROP - Warm Brown Woodgrain and White PL0030 CP0002	SB	GC	
COUNTERTOP					
21918	1	COUNTERTOP - FILLER FRONTBAR - VARIABLE LENGTH	SB	GC	
21919	6	COUNTERTOP - FILLER BACKBAR - VARIABLE LENGTH	SB	GC	
21923	2	COUNTERTOP - END CAP FRONTBAR	SB	GC	
21925	2	COUNTERTOP - BACKBAR - 15IN 380MM	SB	GC	
21927	1	COUNTERTOP - BACKBAR - 30IN 760MM	SB	GC	
21928	2	COUNTERTOP - END CAP BACKBAR	SB	GC	
22328	1	COUNTERTOP - BREW - LF - 90IN 2285MM	SB	GC	
22352	1	COUNTERTOP - ESPRESSO FRONTBAR - LF - 141IN 3580MM	SB	GC	
22354	1	COUNTERTOP - ESPRESSO SHROUD - 141IN 3580MM	SB	GC	
22361	1	COUNTERTOP - POS - 84IN 2135MM	SB	GC	
22364	1	COUNTERTOP - DT POS - LF - 94IN 2390MM	SB	GC	
22386	1	COUNTERTOP - WARMING WITH RACK - LF - 125IN 3175MM	SB	GC	
22394	2	COUNTERTOP - BACKSPLASH - VARIABLE LENGTH	SB	GC	
22395	2	COUNTERTOP - HAND SINK LOW SPLASH - 15IN 380MM	SB	GC	
23149	1	COUNTERTOP - CBE RINSE SINK 90LB ICE BINS - RF - 152IN 3860MM	SB	GC	
24280	1	COUNTERTOP - HOS FRONTBAR - 60IN 1525MM	SB	GC	
24286	2	COUNTERTOP - HOS FRONTBAR TRANSITION FILLER	SB	GC	
X0008	1	CUSTOM COUNTERTOP - BACKBAR CORNER - VARIABLE LENGTH	SB	GC	FINISH: CP005 - CORIAN - BLACK WITH FLECKS
X0011	1	COUNTERTOP - WINDOW SILL	SB	GC	FINISH: CP005 - CORIAN - BLACK WITH FLECKS. LENGTH REQUIRED (V.I.F.):8" X 24"
X0017	3	COUNTERTOP - BACKSPLASH - VARIABLE LENGTH	SB	GC	
DIEWALL					
21886	2	DIEWALL - BASE - VARIABLE LENGTH	SB	GC	
21887	1	DIEWALL - SUBSTRATE PANEL - VARIABLE LENGTH	SB	GC	
21888	47	DIEWALL - SUPPORT LEG	SB	GC	
24516	14	DIEWALL - FRAMING - VARIABLE LENGTH	SB	GC	
24547	4	DIEWALL - VARIABLE LENGTH	SB	GC	
METAL TRIM					
10829	9	CORNER GUARD - 1.25IN 30MM - PEWTER	SB	GC	@BOH
X0014	2	SCHLUTER - FINEC-SQ - TRIM 3/16"	GC	GC	FINISH: MATTE BLACK TEXTURED COLOR-COATED MATERIAL: ALUMINUM.
X0022	3	METAL TRIM - FRY REGLET - "Y" - MILLWORK 1/4IN POST OUTSIDE CORNER	SB	GC	FINISH: BLACK. GC TO ORDER FROM FRY REGLET. LENGTH REQUIRED (V.I.F)
X0025	4	METAL CAP - 5X1/8IN 127X3MM - FLAT BLACK MT0028	SB	GC	GC TO VERIFY ALL DIMENSIONS AND NOTIFY SB/VD ANY DISCREPANCIES. TO BE PROVIDED BY CASEWORK VENDOR. LENGTH REQUIRED (V.I.F)
X0026	1	METAL CAP - 5X1/8IN 127X3MM - MT0028	SB	GC	GC TO VERIFY ALL DIMENSIONS AND NOTIFY SB/VD ANY DISCREPANCIES. TO BE PROVIDED BY CASEWORK VENDOR. LENGTH REQUIRED (V.I.F)
OTHER					
11155	2	ESPRESSO MACHINE PUMP MOUNT - 10X10IN 255X255MM	SB	GC	
21914	7	FRIDGE STOP BRACKET SET	SB	GC	
PANEL					
21933	3	FINISH PANEL - VARIABLE LENGTH	SB	GC	
24287	3	FINISH PANEL - HOS - VARIABLE LENGTH	SB	GC	
24289	2	FINISH PANEL - HOS FRONTBAR CORNER	SB	GC	

CASEWORK FINISH SCHEDULE

ENGINE ZONE	MATERIAL DESCRIPTION	FINISH CODE	COMMENTS
COMPOSITE - BLACK WITH FLECKS			
COUNTERTOPS - BACKBAR	COMPOSITE - BLACK WITH FLECKS	CP0005	
COUNTERTOPS - ESPRESSO	COMPOSITE - BLACK WITH FLECKS	CP0005	
COUNTERTOPS - ESPRESSO SHROUD	COMPOSITE - BLACK WITH FLECKS	CP0005	
COUNTERTOPS - FRONTBAR	COMPOSITE - BLACK WITH FLECKS	CP0005	
COMPOSITE - MATTE BLACK MOTTLED PAPER			
CABINETS - EXTERIOR	COMPOSITE - MATTE BLACK MOTTLED PAPER	CP0024	
CABINETS - UNDERCOUNTER	COMPOSITE - MATTE BLACK MOTTLED PAPER	CP0024	
CABINETS - UNDERCOUNTER ICE BIN	COMPOSITE - MATTE BLACK MOTTLED PAPER	CP0024	
CUSTOM SLATS 1" X 1" WD0035 WOOD - BLACK			
FINISH PANELS - HANDOFF	CUSTOM SLATS 1" X 1" WD0035 WOOD - BLACK	X0303	
METAL - FLAT BLACK POWDERCOAT			
FRAMING AND HARDWARE	METAL - FLAT BLACK POWDERCOAT	MT0028	
METAL - STAINLESS STEEL - BRUSHED			
CABINETS - UNDERCOUNTER ICE BIN	METAL - STAINLESS STEEL - BRUSHED	#4 BRUSHED 16GA	
COUNTERTOPS - HAND SINK	METAL - STAINLESS STEEL - BRUSHED	#4 BRUSHED 16GA	
FRAMING AND HARDWARE	METAL - STAINLESS STEEL - BRUSHED	#4 BRUSHED 16GA	
PLASTIC - BLACK HDPE			
CABINETS - INTERIOR	PLASTIC - BLACK HDPE	PL0044	
WILSONART BLACK VELVET 15505			
CABINETS - DT POS CUBBY	WILSONART BLACK VELVET 15505	X0302	
WOOD - BLACK - PLANK			
FINISH PANEL - FRONT BAR	WOOD - BLACK - PLANK	WD0035	

SPECIALTY EQUIPMENT SCHEDULE - "E"

DESIGN ID	COUNT	DESCRIPTION	FURN. BY	INST. BY	COMMENTS
COOLING					
10267	5	FRIDGE UNDERCOUNTER 1 DOOR - 27IN 685MM	SB	GC	
11083	2	FRIDGE REACH IN 2 DOOR - 51X35IN 1295X890MM	SB	GC	
12618	2	FRIDGE UNDERCOUNTER 1 DOOR WITH SHELF - 27IN 685MM	SB	GC	
13620	1	FREEZER REACH IN 1 DOOR LH - 27IN 685MM	SB	GC	
13682	2	FREEZER REACH IN 2 DOOR - 54IN 1370MM	SB	GC	
20011	1	FRIDGE NITRO 2 TAP JT NITCOM RH	SB	GC	KIT INCLUDES UNDERCOUNTER FRIDGE, FONT, TRAY, AND TUBING
EQUIPMENT					
10808	1	GRINDER DITTING KR1203	SB	GC	GC TO COORDINATE WITH SB VENDOR
10907	1	DISHWASHER LEGS AND SKIRT	SB	GC	GC TO COORDINATE WITH SB VENDOR
12508	2	BLENDER QUIET MODEL ON COUNTER	SB	GC	
19742	2	ESPRESSO MACHINE MASTRENA II	SB	GC	GC TO COORDINATE WITH SB VENDOR
20032	2	OVEN EIKON E2S - BLACK	SB	GC	
21679	1	NITROGEN GENERATOR ELEMENT COMPACT	SB	GC	GC TO COORDINATE INSTALLATIONS AND CONNECTIONS WITH SB VENDOR
22885	1	BREWER CLOVER VERTICA DOUBLE	SB	GC	GC TO COORDINATE WITH SB VENDOR
23380	1	BREWER CLOVER VERTICA DOUBLE INSTALL KIT	SB	GC	GC TO COORDINATE WITH SB VENDOR
23381	1	BREWER CLOVER VERTICA DOUBLE POWER CORD	SB	GC	GC TO COORDINATE WITH SB VENDOR
23454	1	BOH PARTNER AREA MICROWAVE OVEN - BLACK	SB	GC	
24007	1	DISHWASHER LXNR ADVANSYS	SB	GC	GC TO COORDINATE WITH SB VENDOR
FOOD CASE					
16238	1	FOOD CASE - ZEPHYR - 66IN 1675MM	SB	GC	
ICE					
10344	2	ICE - BIN DROP IN 90LB 40KG	SB	GC	
18029	1	ICE - BIN B110	SB	GC	BPF-1 ADAPTER KIT (011076103) REQUIRED WHEN PAIRING WITH 30" (760MM) ICE MACHINES
19278	2	ICE - BIN DROP IN 45LB 20KG HORIZONTAL	SB	GC	
23181	1	ICE - MACHINE HMD2110RBT REMOTE COOLED	SB	GC	
23526	1	ICE - BIN ADAPTOR FOLLETT B110H22H30DV PEDESTAL FOR B110 ICE - BIN ADAPTOR FOLLETT B110H22H30DV PEDESTAL FOR B110	SB	GC	
OTHER					
10099	2	RESTROOM TOILET PAPER HOLDER	SB	GC	
10172	2	RESTROOM SEAT COVER DISPENSER	SB	GC	
10179	2	HAND DRYER SURFACE MOUNTED	SB	GC	
10384	2	DIAPER CHANGING STATION HORIZONTAL	SB	GC	
10396	1	CUP DISPENSER SHORT HOT VERTICAL	SB	GC	
10501	3	FIRE EXTINGUISHER	GC	GC	
10769	2	RESTROOM GRAB BAR VERTICAL - 18IN 455MM	SB	GC	
10791	3	CUP DISPENSER GRANDE VENTI COLD VERTICAL	SB	GC	
10855	3	CUP DISPENSER GRANDE VENTI HOT VERTICAL	SB	GC	
10859	2	RESTROOM GRAB BAR - 48IN 1220MM	SB	GC	
10862	2	RESTROOM GRAB BAR - 36IN 915MM	SB	GC	
10947	1	SOAP DISPENSER WALL MOUNTED	SB	GC	
10977	1	PAPER TOWEL DISPENSER FULL SIZE	SB	GC	
11115	2	SOAP DISPENSER SINK MOUNTED	SB	GC	
13330	1	MOBILE CUP DISPENSER CADDY	SB	GC	
13584	1	CUP DISPENSER TRENTA COLD VERTICAL	SB	GC	
20403	6	KEG - 3GAL	SB	GC	GC TO INSTALL FONT/TAP AND COORDINATE WITH SB VENDOR FOR LINE CONNECTIONS AND SYSTEM COMMISSIONING
21551	1	POWER EXTENSION DUAL RECEPTACLE AND USB - BLACK	SB	GC	
21988	2	HAND DRYER BACK PANEL	SB	GC	
22627	1	NITRO 2 TAP HANDLE WITH BADGE AND MOUNT KIT	SB	GC	JOE TAP, FOR USE AT BACKBAR NITRO FONT
STORAGE					
10222	2	WIRE SHELF GRID AT SINK	SB	GC	
10416	11	WORKROOM SHELVING - 36IN 915MM	SB	GC	
10462	11	WORKROOM SHELVING POSTS	SB	GC	
10698	1	MOP RACK WITH 3 HOLDERS	SB	GC	
15699	1	PARTNER WORK CENTER	SB	GC	
17255	1	PASTRY TRAY CART - 60IN 1525MM PASTRY TRAY CART - 60IN 1525MM	SB	GC	
17264	1	ROLLING PASTRY TRAY THAW RACK - 20X26IN 510X660MM	SB	GC	
21934	1	PASTRY TRAY RACK UNDERCOUNTER - 30IN 760MM	SB	GC	
22212	1	WORKROOM SHELVING CART KIT	SB	GC	
TK0048	2	5 COMP LOCKER - 15IN 380MM	SB	GC	

FURNITURE SCHEDULE - "F"

DESIGN ID	COUNT	DESCRIPTION	FURN. BY	INST. BY	COMMENTS
X0400	1	CB2 BODENE 82IN BLACK CONSOLE TABLE	GC	GC	FROM CRATE & BARREL SKU: 451814. LEAD TIME 2 WEEKS
BAFFLES					
X0404	10	ACOUSTICAL BAFFLE SYSTEM - 106X48IN 2690X1220MM - SLATE	SB	GC	
X0405	10	ACOUSTICAL BAFFLE SYSTEM - 106X48IN 2690X1220MM - SLATE	SB	GC	
BANQUETTE					
19503	1	BANQUETTE - CLOSTER BASE - WHITE OAK WD0077	SB	GC	
19508	1	BANQUETTE - CLOSTER CUSHION VERTICAL STITCH - CARAMEL BROWN NATURAL F0008	SB	GC	
XTK0008	2	BANQUETTE - CUSTOM CLOSTER INSIDE CORNER SQUARED	SB	GC	CHANGE WOOD BACKING TO LEATHER F0008
BENCH					
X0413	1	WEST ELM ALUMINUM PORTSIDE OUTDOOR BENCH	SB	GC	SKU 791759 BY WESTELM. LEAD TIME 4-6 WEEKS. CONTACT: STARBUCKS@WSGC.COM.
CHAIR					
21361	5	CHAIR - CAFE PEGGY UPHOLSTERED - BLACK AND CARAMEL BROWN NATURAL WD0035 F0008	SB	GC	
22721	2	CHAIR - LOUNGE MOON - BLACK AND FERN GREEN NATURAL MT0028 F0244	SB	GC	
23068	4	CHAIR - CAFE PEGGY UPHOLSTERED - WALNUT AND FERN GREEN WD0077 F0244	SB	GC	
23447	15	CHAIR - CAFE HANS 2.0 - MOTTLED GREY	SB	GC	
23449	8	CHAIR - LOUNGE HANS 2.0 - MOTTLED GREY	SB	GC	
24243	3	CHAIR - STOOL 18IN 455MM CROSS STITCHED UPHOLSTERED ROUND - BLACK AND ROAST NATURAL WD0035 F0262	SB	GC	
24371	8	CHAIR - CAFE SADOVE UPHOLSTERED - WALNUT AND CHARCOAL	SB	GC	
24372	6	CHAIR - STOOL BAR HEIGHT SADOVE UPHOLSTERED - WALNUT AND CHARCOAL	SB	GC	
24476	2	Chair - Lounge Armless Mini Club - Walnut and Natural Black WD0077 F0046	SB	GC	
TK0077	1	CHAIR - MANAGERS WORKSTATION	SB	GC	STEELCASE SERIES ONE ARMLESS
X0414	2	CHAIR - MID CENTURY LEATHER SHOW WOOD CHAIR	SB	GC	SKU 4726644 BY WESTELM. LEAD TME 6-8 week lead time. CONTACT: STARBUCKS@WSGC.COM.
DESK					
TK0053	1	DESK - MANAGERS WORKSTATION SHELVES - 48IN 1220MM	SB	GC	
TK0076	1	DESK - MANAGERS WORKSTATION - 48X24X27IN 1220X610X685MM	SB	GC	
DRAPERIES					
X0401	4	BLIND EXPRESS SNOWSOUND ACOUSTIC DRAPERIES	SB	GC	FIBER 3 MELANGE - 303 GREY/TAUPE. PROVIDED BY BLIND EXPRESS
MIRROR					
14350	2	MIRROR - RESTROOM ANGLED- 18X36IN 455X915MM	SB	GC	
TK0050	1	MIRROR - BOH - 16X51IN 405X1295MM	SB	GC	
OTHER					
10756	3	COAT HOOK 1 PRONG SQUARE - 2IN 50MM - SST	SB	GC	
TK0051	1	COAT HOOK STRIP - 30IN 760MM	SB	GC	BLACK FINISH
OTTOMAN					
24349	1	OTTOMAN - STOUT - BLACK AND OCHRE NATURAL WD0035 F0263	SB	GC	
SOFA					
X0406	1	SOFA - HAMILTON - 81IN 2057MM - BURNT SIENNA LEATHER	SB	GC	WEST ELM, ITEM NUMBER: 5942664. LEAD TIME 2-4 WEEKS. PROVIDED BY: WILLIAMS-SONOMA INC (LEAD TIMES: 18-20+ WEEKS). CONTACT: STARBUCKS@WSGC.COM.
STORAGE					
TK0078	1	FILE MOBILE PEDESTAL WITH CUSHION AND LOCK	SB	GC	
TK0079	1	MANAGERS DESK CART - 24X20IN 610X510MM	SB	GC	
TABLE					
17340	5	TABLE - CAFE METAL PEDESTAL BASE SQUARE - 24IN 610MM - BLACK MT0028	SB	GC	
17341	1	TABLE - ACCESSIBLE METAL WITH TAPERED LEGS - 36X24IN 915X610MM - BLACK MT0028	SB	GC	
20128	4	TABLE - OCCASIONAL COFFEE CAMERON - FLAT BLACK MT0028	SB	GC	
21449	5	TABLE - BASE CAFE HEIGHT BOTTLE - FLAT BLACK MT0028	SB	GC	
21453	1	TABLE - BASE ACCESSIBLE BOTTLE - FLAT BLACK MT0028	SB	GC	
21798	1	TABLE - TOP ACCESSIBLE ROUND EDGE OBLONG - 48X24IN 1220X610MM - BLACK WD0035	SB	GC	
21840	5	TABLE - TOP ROUND EDGE ROUND - 24IN 610MM - BLACK WD0035	SB	GC	
24141	2	TABLE - TOP POV CIRCLE - 27.5IN 700MM - NOUGAT	SB	GC	TOP AND BASE HAVE SEPARATE DIDS. ORDER 1 BASE PER TOP.
24274	2	TABLE - BASE BAR HEIGHT POV 463 - NOUGAT	SB	GC	TOP AND BASE HAVE SEPARATE DIDS. ORDER 1 BASE PER TOP.
TK0026	1	TABLE - OCCASIONAL COCKTAIL COCO	SB	GC	
TK0027	4	TABLE - OCCASIONAL SIDE COCO	SB	GC	
X0407	1	TABLE - ORGANIC MODULAR TABLE - SMALL BLACK ON ASH	SB	GC	WEST ELM, ITEM NUMBER: 3125173. LEAD TIME 2-6 WEEKS. PROVIDED BY: WILLIAMS-SONOMA INC (LEAD TIMES: 2-6+ WEEKS). CONTACT: STARBUCKS@WSGC.COM.
X0408	1	TABLE - ORGANIC MODULAR TABLE - LARGE SAND ON DARK WALNUT	SB	GC	WEST ELM, ITEM NUMBER: 2439505. LEAD TIME 2-6 WEEKS. PROVIDED BY: WILLIAMS-SONOMA INC (LEAD TIMES: 2-6+ WEEKS). CONTACT: STARBUCKS@WSGC.COM.
X0409	1	WEST ELM ALUMINUM PORTSIDE OUTDOOR TABLE	SB	GC	SKU 9884205 BY WESTELM. LEAD TIME 2-4 WEEKS. CONTACT: STARBUCKS@WSGC.COM.
X18404	1	TABLE - CUSTOM COMMUNITY CAFE HEIGHT ANGLE BASE - 10 SEAT NARROW - WITH POWER WALNUT WD0077. CURVED ENDINGS	SB	GC	
WINDOW TREATMENT					
22486	10	ROLLER SHADE - DARK BROWN - 5PC OPEN	SB	GC	

PERMIT SET - FOR CONSTRUCTION USE

© 2022 STARBUCKS COFFEE COMPANY

STARBUCKS®
2401 UTAH AVENUE SOUTH
SEATTLE, WASHINGTON 98134
(206) 318-1575

THESE DRAWINGS AND THE PROJECT MANUAL ARE CONFIDENTIAL AND SHALL REMAIN THE SOLE PROPERTY OF STARBUCKS CORPORATION, WHICH IS THE OWNER OF THE COPYRIGHT IN THIS WORK. THEY SHALL NOT BE REPRODUCED (IN WHOLE OR IN PART), SHARED WITH THIRD PARTIES OR USED IN ANY MANNER ON OTHER PROJECTS OR EXTENSIONS TO THIS PROJECT WITHOUT THE PRIOR WRITTEN CONSENT OF STARBUCKS CORPORATION. THESE DRAWINGS AND SPECIFICATIONS ARE INTENDED TO EXPRESS DESIGN INTENT FOR A PROTOTYPICAL STARBUCKS STORE (WHICH IS SUBJECT TO CHANGE AT ANYTIME) AND DO NOT REFLECT ACTUAL SITE CONDITIONS. NEITHER PARTY SHALL HAVE ANY OBLIGATION NOR LIABILITY TO THE OTHER (EXCEPT STATED ABOVE) UNTIL A WRITTEN AGREEMENT IS FULLY EXECUTED BY BOTH PARTIES.

STARBUCKS TEMPLATE VERSION: i2023.04.24

PABLO GARCIA, AIA, REG. FL NO. AR99297

Gensler
MAIN OFFICE
M. ARTHUR GENSLER JR. & ASSOCIATES
220 MONTGOMERY STREET, SUITE 200
SAN FRANCISCO, CA 94104 USA
Tel (415) 433.3700
Fax (415) 836.4599

SATELLITE OFFICE
M. ARTHUR GENSLER JR. & ASSOCIATES
FL QUALIFIER'S LIC. NO. AR96486
545 NW 26TH ST
SUITE 250
MIAMI, FL 33127 USA
Tel (305) 350.7070
Fax (305) 350.7071

PROJECT NAME:
ST LUCIE WEST & SW
CASHEMERE BLVD

PROJECT ADDRESS:
920 SW SAINT LUCIE BLVD, PORT ST.LUCIE, FL 34986

STORE #:	81616
PROJECT #:	101357-001
ISSUE DATE:	07-08-2025
DESIGN MANAGER:	ASHLEY SUEIRAS
PRODUCTION DESIGNER:	GENSLER
CHECKED BY:	GENSLER

Revision Schedule

Rev	Date	By	Description

SHEET TITLE:
CASEWORK AND FF&E SCHEDULES
SCALE: AS SHOWN

SHEET NUMBER:
I601

WALL TREATMENT (AREA) SCHEDULE - "Q"

DESIGN ID	AREA	DESCRIPTION	FURN. BY	INST. BY	COMMENTS
OTHER					
X1100	26 SF	GWB WITH LEVEL 4 FINISH - PAINT AS SCHEDULED.	GC	GC	FINISH: SW7031 MEGA GREIGE AT RESTROOMS & SW9090 CARAIBE AT CAFE.
TILE					
20229	520 SF	TILE - I COCCI - GRAPHITE - 6X24IN 150X600MM	SB	GC	GROUT: MAPEI - 47 CHARCOAL, OR EQUAL
24599	637 SF	TILE - FLATIRON - OLIVIA - GLOSS - 2.5X9.5IN	SB	GC	MAPEI 5007-CHOCOLATE
WALL COVERING					
23764	1440 SF	POLYWALL WALL COVERING - MATTE WHITE	GC	GC	
23815	595 SF	WALL COVERING - FOILED - CAVERN CLAY - TYPE II	SB	GC	A PREMIUM QUALITY PREMIXED FULL STRENGTH COMMERCIAL WALLCOVERING ADHESIVE SHOULD BE APPLIED ONLY TO THE FABRIC SIDE OF THE WALL COVERING. ECO-788 CLAY ADHESIVE OR ECO-888 CLEAR ADHESIVE BY ROMAN IS RECOMMENDED. WALLCOVERING REQUIRES THE USE OF A HEAVY DUTY, PREMIXED VINYL ADHESIVE. DILUTION OF ADHESIVE IS NOT RECOMMENDED. TO BE PROVIDED BY GC.
X1401	250 SF	WALL COVERING - CAMBRIAN - SLATE	SB	GC	PROVIDER: MOMENTUM TEXTILES LLC.

WALL BASE SCHEDULE - "B"

DESIGN ID	LENGTH	DESCRIPTION	FURN. BY	INST. BY	COMMENTS
METAL BASE					
X1301	89' - 9"	METAL BASE - BLACK MT0028 - 6IN 150MM	SB	GC	W/ SANITARY 1/2IN COVE BEND 45-DEGREE. PROVIDED BY CASEWORK VENDOR FOR ENGINE & BANQUETTE VENDOR FOR BANQUETTE.
PLASTIC BASE					
19795	267' - 1 1/4"	POLYVINYL FLOOR TILE - ECOGRIP - PEWTER	GC	GC	
TRANSITION BASE					
X1300	52' - 2 3/4"	SCHLUTER - DILEX - AHK 100 ATGB	GC	GC	FINISH: DARK ANTHRACITE. W/ SANITARY 3/8IN COVE BASE MOLDING. SCHLUTER SYSTEM WILL REQUIRE USE OF 90 DEGREE CORNER PIECE TO ACCOMODATE FOR RADIUS TRIM PROFILE.
X1302	67' - 10 3/4"	TAPERED ALUMINIUM FRAME - 16 GA	GC	GC	FINISH: DARK ANTHRACITE

CEILING TREATMENT SCHEDULE - "U"

DESIGN ID	AREA	DESCRIPTION	FURN. BY	INST. BY	COMMENTS
OTHER					
19734	126 SF	ACT - ULTIMA - 2X2FT 61X61CM	GC	GC	FINISH: SW9090 CARAIBE. INSTALLATION SHALL BE IN STRICT ACCORDANCE W/ MANUFACTURER'S INSTRUCTIONS. CANNOT BE PAINTED IN FIELD. DOING SO WILL VOID ITS WARRANTY. FOR ORDERING CONTACT DEB PICKENS AT DLPICKENS@ARMSTRONGCEILINGS.COM , PH: (480) 695-9053.
X1000	855 SF	ACT - WHITE - 2X4FT 61X122CM	GC	GC	FOR ORDERING CONTACT DEB PICKENS AT DLPICKENS@ARMSTRONGCEILINGS.COM , PH: 480-695-9053
X1001	177 SF	ACT - CIRRUS BEVELED SUPRAFINE PAINTED - 2X4FT 61X122CM	GC	GC	FINISH: SW7031 MEGA GREIGE. INSTALLATION SHALL BE IN STRICT ACCORDANCE W/ MANUFACTURER'S INSTRUCTIONS. CANNOT BE PAINTED IN FIELD. DOING SO WILL VOID ITS WARRANTY. FOR ORDERING CONTACT DEB PICKENS AT DLPICKENS@ARMSTRONGCEILINGS.COM , PH: (480) 695-9053.
X1100	1651 SF	GWB WITH LEVEL 4 FINISH - PAINT AS SCHEDULED.	GC	GC	FINISH: SW7031 MEGA GREIGE AT RESTROOMS & SW9090 CARAIBE AT CAFE.

BARRIER FREE DOOR HARDWARE SCHEDULE - "D"

DESIGN ID	COUNT	MARK	DESCRIPTION	FURN BY	INST BY	COMMENTS
23132	2	10	DOOR - BARRIER FREE HARDWARE ACTUATOR MULLION MOUNT	SB	GC	
23129	1	09	DOOR - BARRIER FREE HARDWARE KEY SWITCH	SB	GC	
23135	1	08	DOOR - BARRIER FREE HARDWARE OPERATOR - BLACK	SB	GC	

BULB SCHEDULE - "L"

DESIGN ID	COUNT	DESCRIPTION	FURN. BY	INST.BY	COMMENTS
LAMP					
X0600	1	FLOOR LAMP - MID-CENTURY TRIPOD - 66IN 1676.4MM - ANTIQUE BRONZE	SB	GC	WEST ELM, SKU: 3993230. LEAD TIME 2 WEEKS

PAINT SCHEDULE

DESIGN ID	COLOR	DESCRIPTION	LRV	FURN. BY	INST. BY	COMMENTS
20438	SW7020	SW7020 BLACK FOX, OR EQUIVALENT	8	GC	GC	SW USE PRIMER CP-1; NCS - S 7502-Y; AKZO NOBEL - 30YY 10/038
20441	SW7031	SW7031 MEGA GREIGE, OR EQUIVALENT	37	GC	GC	SW USE PRIMER CP-1; NCS - S 3005-Y50R; AKZO NOBEL - 20YY 37/094
X0305	<varies>	PLASTIC - BLACK HDPE	13	GC	GC	SW USE PRIMER CP-1

FLOOR TREATMENT SCHEDULE - "T"

DESIGN ID	AREA	DESCRIPTION	FURN. BY	INST. BY	COMMENTS
X0306	72 SF	MATTER BOLON GRAPHIC HERRINGBONE CINNAMON	SB	GC	VENDOR: RICHARD HUSTY RHUSTY@MATTERSURFACES.COM 404-710-7357 MATTERSURFACES.COM. SIZE: 9X8FT
PLASTIC					
19795	1105 SF	POLYVINYL FLOOR TILE - ECO-GRIP - PEWTER	GC	GC	GC TO PROCURE FROM ALLIED INDUSTRIES
TILE					
20230	922 SF	TILE - I COCCI - GRAPHITE - 24X24IN 600X600MM	SB	GC	GROUT: MAPEI - 47 CHARCOAL, OR EQUAL
WALK OFF MAT					
19288	36 SF	WALK OFF MAT - HELIX Z1 - BLACK - 12X9IN 305X230MM	SB	GC	PAINT CONCRETE FLOOR UNDER WALK-OFF MAT WITH BLACK.

GRAPHICS AND ARTWORK SCHEDULE - "G"

DESIGN ID	COUNT	DESCRIPTION	FURN. BY	INST. BY	COMMENTS
GRAPHICS - ARTWORK					
X0500	1	COMMUNITY BOARD MAGNETIC - 36X46IN 915X1170MM	SB	GC	FRAME: 1A - LARSON-JUHL - CRANBROOK 1 & 2 - 613674 EBONIZED WALNUT.
X0501	1	ARTWORK DID: 23856 - ART SIZE: 60X40IN - OVERALL SIZE: 61X41IN	SB	GC	FORMAT: WRAPPED CANVAS IN FLOAT FRAME. FRAME: 3A - LARSON-JUHL - CRANBROOK 1 & 2 - 623674 EBONIZED WALNUT. REFER TO ART DETAIL.
X0502	1	ARTWORK DID:17219 - ART SIZE: 10X17IN - OVERALL SIZE: 17.5X28.5IN	SB	GC	FORMAT: FRAMED AND MATTED. FRAME: 1A - LARSON-JUHL - CRANBROOK 1 & 2 - 613674 EBONIZED WALNUT. REFER TO ART DETAIL.
X0503	1	ARTWORK DID: 22186 - ART SIZE: 11X11IN - OVERALL SIZE: 12.5X12.5IN	SB	GC	FORMAT: FRAMED WITH NOT MAT. FRAME: 1A - LARSON-JUHL - CRANBROOK 1 & 2 - 613674 EBONIZED WALNUT. REFER TO ART DETAIL.
X0504	1	ARTWORK DID:19178 - ART SIZE: 9X7IN - OVERALL SIZE: 10.5X8.5IN	SB	GC	FORMAT: FRAMED WITH NOT MAT. FRAME: 1A - LARSON-JUHL - CRANBROOK 1 & 2 - 613674 EBONIZED WALNUT. REFER TO ART DETAIL.
X0505	1	ARTWORK DID: 16784 - ART SIZE: 9X11IN - OVERALL SIZE: 10.5X12.5IN	SB	GC	FORMAT: FRAMED WITH NOT MAT. FRAME: 1A - LARSON-JUHL - CRANBROOK 1 & 2 - 613674 EBONIZED WALNUT. REFER TO ART DETAIL.
X0506	1	ARTWORK DID: 22185 - ART SIZE: 11X11IN - OVERALL SIZE: 12.5X12.5IN	SB	GC	FORMAT: FRAMED WITH NOT MAT. FRAME: 1A - LARSON-JUHL - CRANBROOK 1 & 2 - 613674 EBONIZED WALNUT. REFER TO ART DETAIL.
X0507	1	ARTWORK DID:19839 - ART SIZE: 12X9IN - OVERALL SIZE: 23.5X16.5IN	SB	GC	FORMAT: FRAMED AND MATTED. FRAME: 1A - LARSON-JUHL - CRANBROOK 1 & 2 - 613674 EBONIZED WALNUT. REFER TO ART DETAIL.
X0508	1	ARTWORK DID:16992 - ART SIZE: 9X7IN - OVERALL SIZE: 10.5X8.5IN	SB	GC	FORMAT: FRAMED WITH NOT MAT. FRAME: 1A - LARSON-JUHL - CRANBROOK 1 & 2 - 613674 EBONIZED WALNUT. REFER TO ART DETAIL.
X0509	1	ARTWORK DID: 16787 - ART SIZE: 11X11IN - OVERALL SIZE: 12.5X12.5IN	SB	GC	FORMAT: FRAMED WITH NOT MAT. FRAME: 1A - LARSON-JUHL - CRANBROOK 1 & 2 - 613674 EBONIZED WALNUT. REFER TO ART DETAIL.
X0510	1	ARTWORK DID:16789 - ART SIZE: 38X19IN - OVERALL SIZE: 39.5X20.5IN	SB	GC	FORMAT: FRAMED WITH NOT MAT. FRAME: 1A - LARSON-JUHL - CRANBROOK 1 & 2 - 613674 EBONIZED WALNUT. REFER TO ART DETAIL.
X0511	1	ARTWORK DID:19838 - ART SIZE: 14X9IN - OVERALL SIZE: 18.5X13.5IN	SB	GC	FORMAT: FRAMED WITH MAT. FRAME: 1A - LARSON-JUHL - CRANBROOK 1 & 2 - 613674 EBONIZED WALNUT. REFER TO ART DETAIL.
X0512	1	ARTWORK DID:16964 - ART SIZE: 10X7IN - OVERALL SIZE: 14.5X11.5IN	SB	GC	FORMAT: FRAMED WITH MAT. FRAME: 1A - LARSON-JUHL - CRANBROOK 1 & 2 - 613674 EBONIZED WALNUT. REFER TO ART DETAIL.
X0513	1	ARTWORK DID:22094 - ART SIZE: 14X20IN - OVERALL SIZE: 15.5X21.5IN	SB	GC	FORMAT: FRAMED WITH NOT MAT. FRAME: 1A - LARSON-JUHL - CRANBROOK 1 & 2 - 613674 EBONIZED WALNUT. REFER TO ART DETAIL.
X0514	1	ARTWORK DID:22143 - ART SIZE: 32X11IN - OVERALL SIZE: 39.5X18.5IN	SB	GC	FORMAT: FRAMED AND MATTED. FRAME: 1B - LARSON-JUHL - CRANBROOK 1 & 2 - 613675 NATURAL WALNUT. REFER TO ART DETAIL.
X0515	1	ARTWORK DID:16780 - ART SIZE: 12X12IN - OVERALL SIZE: 13.5X13.5IN	SB	GC	FORMAT: FRAMED WITH NOT MAT. FRAME: 1A - LARSON-JUHL - CRANBROOK 1 & 2 - 613674 EBONIZED WALNUT. REFER TO ART DETAIL.
X0516	1	ARTWORK DID: 16785 - ART SIZE: 10X10IN - OVERALL SIZE: 19.5X19.5IN	SB	GC	FORMAT: FLOATED BEHIND GLAZIN WITHOUT MAT. FRAME: 1A - LARSON-JUHL - CRANBROOK 1 & 2 - 613674 EBONIZED WALNUT. REFER TO ART DETAIL.
X0517	1	ARTWORK DID: 16783 - ART SIZE: 10X10IN - OVERALL SIZE: 19.5X19.5IN	SB	GC	FORMAT: FLOATED BEHIND GLAZIN WITHOUT MAT. FRAME: 1A - LARSON-JUHL - CRANBROOK 1 & 2 - 613674 EBONIZED WALNUT. REFER TO ART DETAIL.
X0518	1	ARTWORK DID: 24448 - ART SIZE: 16X23IN - OVERALL SIZE: 25.5X32.5IN	SB	GC	FORMAT: FRAMED AND MATTED. FRAME: 1A - LARSON-JUHL - CRANBROOK 1 & 2 - 613674 EBONIZED WALNUT. REFER TO ART DETAIL.
X0519	1	ARTWORK DID: 24446 - ART SIZE: 16X23IN - OVERALL SIZE: 25.5X32.5IN	SB	GC	FORMAT: FRAMED AND MATTED. FRAME: 1A - LARSON-JUHL - CRANBROOK 1 & 2 - 613674 EBONIZED WALNUT. REFER TO ART DETAIL.
X0520	1	ARTWORK DID: 24442 - ART SIZE: 16X23IN - OVERALL SIZE: 25.5X32.5IN	SB	GC	FORMAT: FRAMED AND MATTED. FRAME: 1A - LARSON-JUHL - CRANBROOK 1 & 2 - 613674 EBONIZED WALNUT. REFER TO ART DETAIL.
GRAPHICS - OTHER					
19778	1	RESTROOM SIGN MEN ACCESSIBLE	SB	GC	
19779	1	RESTROOM SIGN WOMEN ACCESSIBLE	SB	GC	
23136	1	AUTOMATIC DOOR CAUTION SIGNAGE	SB	GC	
X0802	1	ADA COMPLIANT HANDICAP ACCESSIBLE SIGN WITH BRAILLE - 6X9IN 152X228MM	SB	GC	FRAMELESS WITH SQUARE CORNERS, FINISH: BLACK WITH SILVER LETTERING. MOUNTING: 3M CLEAR TAPE FOR GLASS & SMOOTH FINISHES OR FOAM TAPE FOR SOLID SURFACES. REFER TO DETAIL ON SHEET G004.

MECHANICAL EQUIPMENT SCHEDULE - "M"

DESIGN ID	COUNT	DESCRIPTION	FURN. BY	INST. BY	COMMENTS
X1202	9	SUPPLY DIFFUSER	GC	GC	
FAN					
X1200	1	LOW PROFILE AIR CURTAIN FOR WALL - INSIDE MOUNT - RAC-22 - BLACK	GC	GC	GC TO COORD. W/ LL. INSTALL & CABLING WITH SB VENDOR. CONTACT: ANNA ELLIS AT READY@READY-ACCESS.COM OR 1-800-621-5045.
HVAC					
10317	8	HVAC - VAV SUPPLY 4 WAY SQUARE - 24IN 610MM	GC	GC	COLOR TO MATCH CEILING, REFER TO MECHANICAL DRAWINGS.
10718	2	HVAC - SUPPLY 2 WAY HARD LID SQUARE - 12IN 305MM	GC	GC	COLOR TO MATCH CEILING, REFER TO MECHANICAL DRAWINGS.
OTHER					
17797	1	ENERGY MANAGEMENT SYSTEM - HVAC ONLY	SB	GC	
X1206	2	SFM - SURFACE MOUNTED ACCESS DOOR - 24IN 610MM	GC	GC	POWDERCOATED FINISH TO MATCH ADJACENT CEILING, REFER TO MECHANICAL DRAWINGS.

PLUMBING FIXTURE SCHEDULE - "P"

DESIGN ID	COUNT	DESCRIPTION	FURN. BY	INST. BY	COMMENTS
DRAIN					
10294	7	DRAIN - FLOOR SINK SQUARE - 12IN 305MM	SB	GC	
10594	3	DRAIN - FLOOR SINK SQUARE - 5IN 125MM	GC	GC	5" FLOOR DRAIN; MANUFACTURER: ZURN; MODEL: Z41B
10726	7	DRAIN - GRATE HALF SQUARE - 12IN 305MM	SB	GC	
X0701	2	DRAIN - FLOOR DRAIN ROUND - 5IN 305MM	GC	GC	
FAUCET					
10152	1	FAUCET - DOUBLE LABORATORY WITH BENT RISER SPOUT	SB	GC	
10153	4	FAUCET - WATER TOWER - 12IN 305MM	SB	GC	
10215	2	FAUCET - DOUBLE LABORATORY WITH SWING SPOUT	SB	GC	
10447	1	FAUCET - PRE RINSE SPRAYER WALL MOUNTED	SB	GC	
10597	2	FAUCET - SINGLE HANDLE	SB	GC	
10804	1	FAUCET - PRE RINSE SWING SPOUT	SB	GC	
10922	1	FAUCET - MOP SINK WALL MOUNTED	SB	GC	
10943	1	FAUCET - SINGLE LABORATORY WITH SWING SPOUT	SB	GC	
11003	2	FAUCET - METERED	SB	GC	
13588	1	FAUCET - HAND SINK WALL MOUNTED	SB	GC	
21352	2	FAUCET - RESTROOM WITH MOTION SENSOR	SB	GC	
22642	3	FAUCET - INSTANTHOT SYSTEM 2 BUTTON WITH BOILER AND BRACKET	SB	GC	KIT INCLUDES FONT, UNDERCOUNTER BOILER AND BOILER BRACKET FOR SIDE PANEL MOUNTING. BRACKET CAN BE FLOOR MOUNTED USING SET OF (4) STAINLESS STEEL LEGS, ORDERED SEPARATELY THROUGH VENDOR.
FILTER					
13076	1	FILTER - PREFILTRATION SYSTEM	SB	SB	GC TO COORDINATE WITH SB VENDOR
13080	1	FILTER - HEAD QUAD	SB	SB	GC TO COORDINATE WITH SB VENDOR
13081	4	FILTER - CARBON FILTER CARTRIDGE	SB	SB	GC TO COORDINATE WITH SB VENDOR
23355	1	FILTER - FILTRATION BOOSTER PUMP	SB	SB	GC TO COORDINATE WITH SB VENDOR
OTHER					
11109	1	WATER HEATER TANK ELECTRIC	GC	GC	
SINK					
10116	2	SINK - RESTROOM WALL MOUNTED	SB	GC	
10549	1	SINK - RINSE DROP IN SST - 12X20IN 305X510MM	SB	GC	
10995	1	SINK - MOP - 24X24IN 610X610MM	SB	GC	
13700	1	SINK - 3 COMP WORK SST - 105IN 2665MM	SB	GC	
14688	1	SINK - HAND WITH SIDE SPLASH WALL MOUNTED SST	SB	GC	
18743	1	SINK - WATER FILLING STATION - 36X24IN 915X610MM	SB	GC	
22630	1	SINK - RINSE DROP IN - 27X26IN 685X670MM	SB	GC	
22768	2	SINK - COUNTERTOP RINSER WITH WATER TOWER - 26X9IN 660X235MM	SB	GC	
TOILET					
22558	2	TOILET - TANKLESS AUTOMATIC SINGLE FLUSH	GC	GC	

PERMIT SET - FOR CONSTRUCTION USE

© 2022 STARBUCKS COFFEE COMPANY

STARBUCKS®
2401 UTAH AVENUE SOUTH
SEATTLE, WASHINGTON 98134
(206) 318-1575

THESE DRAWINGS AND THE PROJECT MANUAL ARE CONFIDENTIAL AND SHALL REMAIN THE SOLE PROPERTY OF STARBUCKS CORPORATION, WHICH IS THE OWNER OF THE COPYRIGHT IN THIS WORK. THEY SHALL NOT BE REPRODUCED (IN WHOLE OR IN PART), SHARED WITH THIRD PARTIES OR USED IN ANY MANNER ON OTHER PROJECTS OR EXTENSIONS TO THIS PROJECT WITHOUT THE PRIOR WRITTEN CONSENT OF STARBUCKS CORPORATION. THESE DRAWINGS AND SPECIFICATIONS ARE INTENDED TO EXPRESS DESIGN INTENT FOR A PROTOTYPICAL STARBUCKS STORE (WHICH IS SUBJECT TO CHANGE AT ANYTIME) AND DO NOT REFLECT ACTUAL SITE CONDITIONS. NEITHER PARTY SHALL HAVE ANY OBLIGATION NOR LIABILITY TO THE OTHER (EXCEPT STATED ABOVE) UNTIL A WRITTEN AGREEMENT IS FULLY EXECUTED BY BOTH PARTIES.

STARBUCKS TEMPLATE VERSION: i2023.04.24

PABLO GARCIA, AIA, REG. FL NO. AR99297

Gensler
MAIN OFFICE
M. ARTHUR GENSLER JR. & ASSOCIATES
220 MONTGOMERY STREET, SUITE 200
SAN FRANCISCO, CA 94104 USA
Tel (415) 433.3700
Fax (415) 836.4599

SATELLITE OFFICE
M. ARTHUR GENSLER JR. & ASSOCIATES
FL QUALIFIER'S LIC. NO. AR96486
545 NW 26TH ST
SUITE 250
MIAMI, FL 33127 USA
Tel (305) 350.7070
Fax (305) 350.7071

PROJECT NAME:
ST LUCIE WEST & SW CASHEMERE BLVD

PROJECT ADDRESS:
920 SW SAINT LUCIE BLVD, PORT ST.LUCIE, FL 34986

STORE #: 81616
PROJECT #: 101357-001
ISSUE DATE: 07-08-2025
DESIGN MANAGER: ASHLEY SUEIRAS
PRODUCTION DESIGNER: GENSLER
CHECKED BY: GENSLER

Revision Schedule

Rev	Date	By	Description

SHEET TITLE:
INTERIOR FINISHES SCHEDULES
SCALE: AS SHOWN

SHEET NUMBER:
I602

LIGHTING FIXTURE SCHEDULE - "L"

DESIGN ID	COUNT	DESCRIPTION	FURN. BY	INST. BY	BULB	COMMENTS
X0601	1	WEST ELM - LOUIS TABLE LAMP 13" - BLACK	SB	GC	INTEGRATED LED	WEST ELM. SKU: 9168203. lead time 2 weeks
EXIT						
19047	2	LED EXIT SIGN WITH EMERGENCY LIGHT - BLACK AND GREEN	SB	GC	INTEGRATED LED	
19050	2	LED EXIT SIGN RECESSED - ALUMINUM AND GREEN	SB	GC	INTEGRATED LED	
19057	6	LED EMERGENCY LIGHT DOUBLE - BLACK	SB	GC	INTEGRATED LED	
LAMP						
X0600	1	FLOOR LAMP - MID-CENTURY TRIPOD - 66IN 1676.4MM - ANTIQUE BRONZE	SB	GC	23W CFL BULB OR A 100W INCANDESCENT BULB	WEST ELM, SKU: 3993230. LEAD TIME 2 WEEKS
OTHER						
17796	8	LED STRING LIGHTS - 48FT 1463CM	SB	GC	INTEGRATED LED	
PENDANT						
20661	4	PENDANT - ANDLIGHT SPOTLIGHT VOLUMES - BLACK	SB	GC	AS PACKAGED: 1X LED G25 6.5W (DOWN); 1X LED A15 4.5W (UP)	Combinations: C/A, C/C, B/C, C/A
24115	3	PENDANT - PENSEE - PEARL BROWN AND GOLD	SB	GC		
RECESSED CAN						
21771	43	CAN - LED ADJUSTABLE RECESSED - 3IN 75MM - BLACK - 800LM FLOOD	SB	GC	INTEGRATED LED	
21773	9	CAN - LED ADJUSTABLE RECESSED - 3IN 75MM - BLACK - 700LM WF	SB	GC	INTEGRATED LED	
SCONCE						
14355	1	SCONCE - MESH CYLINDER SMALL- BRONZE	SB	GC	(1) LED 5W 2700K (INCLUDED) OR EQUAL	
20739	3	SCONCE - KUZCO VEGA - 23IN 585MM - BLACK	SB	GC	INTEGRATED LED	
20753	2	SCONCE - MATTEO BLINK - BLACK	SB	GC	AS PACKAGED: 1X LED G16.5 4W CANDELABRA BASE	
20791	2	SCONCE - RBW PASTILLE VANITY - BLACK	SB	GC	INTEGRATED LED	
STRIP						
22215	6	STRIP - LED TAPE IN HOUSING - VARIABLE LENGTH - BLACK - 350LM PER FT	SB	GC	INTEGRATED LED	FIELD TRIMMABLE TO 0.9IN LENGTHS (V.I.F): (1) 78"
22217	3	STRIP - LED TAPE - VARIABLE LENGTH - 350LM PER FT	SB	GC	INTEGRATED LED	FIELD TRIMMABLE TO 0.9IN LENGTHS (V.I.F): (1) 251" (1) 576"
TRACK						
12946	1	TRACK - WITH CONNECTORS - 4FT 122CM - BLACK - 1 CIRCUIT	SB	GC		
15058	14	TRACK - WITH CONNECTORS - 6FT 183CM - BLACK - 1 CIRCUIT	SB	GC		
21779	38	TRACK - LED FIXTURE WITH SNOOT - 3IN 75MM - BLACK - 1100LM FLOOD	SB	GC	INTEGRATED LED	
TROFFER						
23055	7	TROFFER - LED RECESSED - 24X48IN 600X1200MM - WHITE - 2700K	SB	GC	INTEGRATED LED	

DATA DEVICE SCHEDULE - "A"

DESIGN ID	COUNT	DESCRIPTION	FURN. BY	INST. BY	COMMENTS
AUDIO VISUAL					
10005	1	MUSIC SYSTEM	SB	GC	GC TO INSTALL AND TEST SYSTEM.
10013	3	DT QUEUE CAMERA	SB	SB	GC TO COORD. W/ SB VENDOR.
10017	2	SPEAKER SURFACE MOUNTED - BLACK	SB	GC	GC TO INSTALL AND TEST SYSTEM.
10076	1	AMPLIFIER - 60W	SB	GC	
12336	1	DT TIMER SYSTEM	SB	SB	
19493	3	SPEAKER PENDANT MOUNTED - BLACK	SB	GC	GC TO INSTALL AND TEST SYSTEM.
22725	1	DT DIGITAL PRODUCTION MONITOR	SB	SB	PART OF RETAIL IT EQUIPMENT PACKAGE
22726	1	DT POS MONITOR ARM TRIPLE SURFACE MOUNTED	SB	SB	PART OF RETAIL IT EQUIPMENT PACKAGE
24351	1	DT HEADSET COMMUNICATION SYSTEM	SB	SB	
DATA					
10002	1	COMPUTER MANAGER WORKSTATION	SB	SB	
10007	1	PRINTER MANAGER WORKSTATION	SB	SB	
18744	1	EQUIPMENT RACK WITH LOCK - 24IN 610MM	SB	SB	
20294	4	IOT MODULE	SB	SB	
24361	9	DIGITAL TEMPERATURE SENSOR	SB	SB	
GRAPHICS - INTERIOR MENU					
22970	3	MENU BOARD - DIGITAL DISPLAY - 44X25.25IN 1121X644MM - BLACK	SB	SB	GC TO COORDINATE INSTALL & CABLING WITH SB VENDOR
22972	1	MENU BOARD - DIGITAL MENU BOARD MOUNTING BRACKET THREE SCREEN - BLACK MENU BOARD - DIGITAL MENU BOARD MOUNTING BRACKET THREE SCREEN - BLACK	SB	GC	GC TO INSTALL BRACKET AND ASSOCIATED BLOCKING
POINT OF SALE					
10008	2	POS - REGISTER WITH COMPACT CASH DRAWER	SB	SB	
10014	3	POS PRINTER	SB	SB	
10022	1	MONEY COUNTER	SB	SB	GC TO COORD. W/ SB VENDOR.
10029	6	POS BANK	SB	GC	
10075	4	CUP LABELER	SB	SB	
14677	1	POS - DT TENDERING REGISTER	SB	SB	PART OF RETAIL IT EQUIPMENT PACKAGE
14678	1	POS - DT EXPEDITOR	SB	SB	PART OF RETAIL IT EQUIPMENT PACKAGE
SECURITY					
23832	1	SMART SAFE ROUTER	SB	SB	GC TO COORDINATE INSTALL & CABLING WITH SB VENDOR
23833	1	SMART SAFE 4 LH - 20X25X31IN 510X635X780MM	SB	GC	GC TO COORD. W/ SB VENDOR. STORE MANAGER TO PROGRAM WITH VENDOR PROVIDED MANUAL
24208	1	SMART SAFE 4 RISER 1IN	SB	GC	GC TO COORD. W/ SB VENDOR. STORE MANAGER TO PROGRAM WITH VENDOR PROVIDED MANUAL
X0100	3	IP SINGLE VIEW SECURITY CAMERA	SB	SB	GC TO COORD. W/ SB VENDOR. MODEL: AXIS P1435-LE

DOOR SCHEDULE - "D"

DESIGN ID	MARK	DESCRIPTION	WIDTH	HEIGHT	HARDWARE SET	FURN BY	INST BY	COMMENTS
Exterior								
21146	06	DOOR - SINGLE SERVICE- 36IN	3' - 2"	7' - 0"	EXIST	EXIST	EXIST	EXISTING DOOR AND HARDWARE TO REMAIN. GC TO VERIFY THEIR CONDITION AND PROPER FUNCTION.
10449	01	DOOR - STOREFRONT METAL FRAME DOUBLE - TYPE A	6' - 0"	7' - 0"	3-A-BRFR	EXIST	EXIST	EXISTING DOOR AND HARDWARE TO REMAIN. GC TO VERIFY THEIR CONDITION AND PROPER FUNCTION.
10205	02	DOOR - STOREFRONT METAL FRAME SINGLE - TYPE B	3' - 0"	6' - 11 3/4"	EXIST	EXIST	EXIST	EXISTING DOOR AND HARDWARE TO REMAIN. GC TO VERIFY THEIR CONDITION AND PROPER FUNCTION.
Interior								
10190	04	DOOR - SINGLE FLUSH - 36IN	3' - 0"	7' - 0"	7	SB	GC	FINISHES: DOOR PANEL: TO MATCH WOOD BLACK (DID: WD0035, REF. MINWAX WOOD FINISH – TRUE BLACK – 274 -SEMI-TRANSPARENT). DOOR FRAME: POWDERCOATED TO MATCH BLACK MAGIC (SW6991). KICK PLATE: MT0028
10190	05	DOOR - SINGLE FLUSH - 36IN	3' - 0"	7' - 0"	7	SB	GC	FINISHES: DOOR PANEL: TO MATCH WOOD BLACK (DID: WD0035, REF. MINWAX WOOD FINISH – TRUE BLACK – 274 -SEMI-TRANSPARENT). DOOR FRAME: POWDERCOATED TO MATCH BLACK MAGIC (SW6991). KICK PLATE: MT0028
10086	07	DOOR - SINGLE IMPACT DOUBLE ACTING - 36IN 915MM	3' - 0"	7' - 0"	11	SB	GC	HM, U, NR HM4, DOOR TYPE B. FINISHES: DOOR PANEL:MOTTLED BLACK (DID PL0019). FRAME: POWDERCOAT FLAT BLACK (DID: MT0028).

PERMIT SET - FOR CONSTRUCTION USE

© 2022 STARBUCKS COFFEE COMPANY

STARBUCKS®
2401 UTAH AVENUE SOUTH
SEATTLE, WASHINGTON 98134
(206) 318-1575

THESE DRAWINGS AND THE PROJECT MANUAL ARE CONFIDENTIAL AND SHALL REMAIN THE SOLE PROPERTY OF STARBUCKS CORPORATION, WHICH IS THE OWNER OF THE COPYRIGHT IN THIS WORK. THEY SHALL NOT BE REPRODUCED (IN WHOLE OR IN PART), SHARED WITH THIRD PARTIES OR USED IN ANY MANNER ON OTHER PROJECTS OR EXTENSIONS TO THIS PROJECT WITHOUT THE PRIOR WRITTEN CONSENT OF STARBUCKS CORPORATION. THESE DRAWINGS AND SPECIFICATIONS ARE INTENDED TO EXPRESS DESIGN INTENT FOR A PROTOTYPICAL STARBUCKS STORE (WHICH IS SUBJECT TO CHANGE AT ANYTIME) AND DO NOT REFLECT ACTUAL SITE CONDITIONS. NEITHER PARTY SHALL HAVE ANY OBLIGATION NOR LIABILITY TO THE OTHER (EXCEPT STATED ABOVE) UNTIL A WRITTEN AGREEMENT IS FULLY EXECUTED BY BOTH PARTIES.

STARBUCKS TEMPLATE VERSION: i2023.04.24

PABLO GARCIA, AIA, REG. FL NO. AR99297

Gensler

MAIN OFFICE
M. ARTHUR GENSLER JR. & ASSOCIATES
220 MONTGOMERY STREET, SUITE 200
SAN FRANCISCO, CA 94104 USA
Tel (415) 433.3700
Fax (415) 836.4599

SATELLITE OFFICE
M. ARTHUR GENSLER JR. & ASSOCIATES
FL QUALIFIER'S LIC. NO. AR96486
545 NW 26TH ST
SUITE 250
MIAMI, FL 33127 USA
Tel (305) 350.7070
Fax (305) 350.7071

PROJECT NAME:
ST LUCIE WEST & SW
CASHEMERE BLVD

PROJECT ADDRESS:
920 SW SAINT LUCIE BLVD, PORT ST.LUCIE, FL 34986

STORE #: 81616
PROJECT #: 101357-001
ISSUE DATE: 07-08-2025
DESIGN MANAGER: ASHLEY SUEIRAS
PRODUCTION DESIGNER: GENSLER
CHECKED BY: GENSLER

Revision Schedule

Rev	Date	By	Description

SHEET TITLE:
INTERIOR FINISHES SCHEDULES
SCALE: AS SHOWN

SHEET NUMBER:
I603

STRUCTURAL NOTES

GENERAL NOTES

GN-1 The governing Code for this Project is the Florida Building Code, 8th Edition (2023). This Code prescribes which edition of each referenced standard applies to this Project.

GN-2 To the best of our knowledge, the Structural Drawings and Plan Specifications comply with the applicable requirements of the governing Building Code.

GN-3 Construction is to comply with the requirements of the governing Building Code and all other applicable Federal, State, and Local Codes, Standards, Regulations and Laws.

GN-4 Use these Notes in conjunction with the Plan Specifications. If a conflict exists, the more stringent governs.

GN-5 See Plan Specifications for testing.

GENERAL NOTES - CONTRACTOR REQUIREMENTS

GN-6 Contractor refers to the General Contractor, Construction Manager, or the organization that is assigned to have overall responsibility and supervision of the Project.

GN-7 The Contractor shall be solely responsible for, and have control over, the means, methods, supervision, techniques, sequences, procedures of construction, quality, and correctness of the work. The Contractor is solely responsible for jobsite safety including all OSHA requirements.

GN-8 The Contractor shall coordinate all Contract Documents with field conditions and dimensions and Project Shop Drawings prior to construction. Do not scale drawings; use only printed dimensions. Report any discrepancies in writing to the Architect prior to proceeding with work. Do not change size or location of structural members without written instructions from the Structural Engineer of Record.

GN-9 Contractors who discover discrepancies, omissions or variations in the Contract Documents during bidding shall immediately notify the Architect. The Architect will resolve the condition and issue a written clarification.

GN-10 The Contractor shall protect adjacent property, his own work and the public from harm. The Contractor is advised to document the condition of adjacent property with a photographic survey and other documentation, including crack monitoring, prior to and during construction.

GENERAL NOTES - DRAWINGS

GN-11 The Structural drawings shall be used in conjunction with the architectural drawings and all other drawings and documents, including shop drawings prepared by equipment suppliers and delegated engineers.

GN-12 Openings shown on Structural Drawings are only pictorial. See the Architectural for complete information such as slab depressions, slopes, curbs, finishes, and opening locations in structural members as required by MEP systems and architectural elements.

GN-13 Details labeled "typical" apply to all situations that are the same or similar to those specifically referenced, whether or not they are keyed in at each location. Questions regard-ing the applicability of typical details shall be resolved by the Architect.

GN-14 See Architectural drawings for fireproofing and waterproofing details and requirements.

GENERAL NOTES - DESIGN LOADS

GN-15 Design Loads:

OCCUPANCY	LIVE LOAD	DEAD LOAD	CONCENTRATED LOAD
Retail	75 psf	20 psf	1,000#

Design superimposed dead loads listed above do not include masonry walls or other concentrated loads. See architectural drawings for these loads. Concentrated live loads do not act concurrently with area live loads.

GN-16 Handrails and Guards:

Linear Loading	50 lbs/ft
Concentrated Loading	200 lbs
Intermediate Rails	50 lbs
Applied Area	1 sf

Loads shall be applied to act in any direction at any point on the handrail or top rail to produce the maximum load effect. Linear and concentrated loading shall not be applied concurrently.
Glass in handrails and guards shall be designed with a safety factor of 4.

SHOP DRAWINGS AND OTHER SUBMITTALS

SD-1 Refer to the applicable Plan Specifications for technical content requirements. Incomplete submittals will be returned without review.

SD-2 Submit specific components, such as slabs, in a single package. Submit similar floors together.

SD-3 On first submittal, clearly flag and cloud all differences from the Contract Documents. On resubmittals, flag and cloud all changes and additions to previous submittal; only clouded items will be reviewed.

SD-4 The Trade Contractor is responsible for confirming and correlating dimensions at the job sites, for tolerances, clearances, quantities, fabrication processes and techniques of construction, coordination of the work with other trades and full compliance with the Contract Documents.

SD-5 The Contractor shall review and approve submittals, including substitution requests and shop drawings, and shall sign and date each drawing prior to submitting to the Architect. This approval is to confirm that the submittal is complete, complies with the submittal requirements and is coordinated with field dimensions, other trades, erection sequencing and constructability. Submittals not reviewed by the Contractor will be returned without review.

SD-6 Bliss & Nyitray (BNI) reviews submittals to confirm that the submittal is in general conformance with the design concept presented in the Contract Documents. Quantities and dimensions are not checked. Notations on submittals do not authorize changes to the contract sum. Checking of the submittal by BNI shall not relieve the Contractor of responsibility for deviations from the Contract Documents and from errors or omissions in the submittal.

SD-7 BNI may transfer to the Contractor BIM files, CAD files or other electronic data for use in preparing Shop Drawings. The contractor shall email a request for BIM or CAD files along with an acknowledgement that he/she has read and agreed to the following terms and conditions:

A. This electronic data remains the property of BNI, and in no case shall the transfer of these files be considered a sale. The files shall not be used for other projects, additions to this project, or for completion of this project by others.
B. The Contractor is responsible for assuring that the electronic data accurately represents the Contract Documents. In the event of a conflict, the Contract Documents shall govern.
C. The electronic data is current as of the date of transfer but may subsequently be revised or supplemented. If so, then the Contractor may request updated electronic data.
D. The use of these electronic data shall not modify Contractor's responsibility for coordination with other trades, or for the proper checking and coordination of dimensions, details, member sizes and gage, and quantities of materials to facilitate complete and accurate fabrication and erection.
E. Do not scale dimensions since the electronic data may not be precise and, in some cases, have been intentionally altered for presentation purposes.
F. Contractor shall indemnify, defend and hold harmless BNI from all claims, damages, losses, expenses, penalties, and liabilities, including attorneys' fees, arising out of or resulting from the use of the electronic data by Contractor or others.

SLABS ON GRADE

SG-1 For interior slabs use 6 mil vapor retarder complying with ASTM E1745 between soil and bottom of slab and install in conformance with ASTM E1643. Lap joints 6" and seal with manufacturer approved tape. Repair all punctures and tears, and seal around all penetrations. Do not use any sheeting below exterior concrete slabs.

SG-2 Reinforce slabs on grade with welded wire reinforcement supplied in flat sheets only. Use chairs to support wire reinforcement in the center of slab. Fiber reinforced concrete shall not be used at slabs to receive a broom finish.

SG-3 Provide crack control joints as directed in the Architectural drawings in all floating slabs on grade 2 hours after final finish but not more than 8 hours after completion of the pour. Aspect ratio shall not exceed 1.25. Avoid L-shaped panels. Locate to conform to bay spacing whenever possible, add crack control joints at re-entrant corners which tend to invite cracks.

SG-4 See the Architectural Drawings for slab on grade depressions and other requirements.

SG-5 Termite protection shall be provided by a Registered Termiticides, and a certificate of compliance shall be issued to the building department per the Florida Building Code, section 1816. Refer to the Architectural Drawings for additional information.

REINFORCED CONCRETE

RC-1 Comply with ACI 301 and 318 and Plan Specifications.

RC-2 Provide structural concrete with a minimum ultimate compressive design strength in 28 days as follows:

Element	Strength
Slabs on Grade	3,500 psi

RC-3 Use normal weight concrete for all structural members. u.o.n.

RC-4 Provide ASTM A615 Grade 60 reinforcing steel. Reinforcing shall be accurately placed, rigidly supported and firmly tied in place, with appropriate bar supports and spacers. Lap continuous reinforc-ing 48 bar dia. Provide cover over reinforcing as follows:

Element	Bottom	Top	Sides
Slabs on Grade	Mid-Depth		2"

RC-5 Where specified, provide plain, cold-drawn electrically-welded wire reinforcement conforming to ASTM A185. Supply in flat sheets only. Lap splice two cross wire spacings.

RC-6 Utilities shall not penetrate beams or columns but may pass through slabs and walls individually, uon. For openings 24" long or less, cut reinforcing and replace alongside opening with splice bars of equivalent area with 48 bar dia. lap. Prepare and submit shop drawings for openings longer than 24". For rectangular openings 12" long or longer, add 1#5 x 6' mid depth diagonal at all 4 corners.

RC-7 Where reinforcing steel congestion permits, conduit and pipes up to 1" diameter may be embedded in concrete per ACI 318, Section 20.7. Space at 3 diameters o.c. Place in the middle third of the slab depth. If conduits are significantly congested, additional reinforcing perpendicular to piping may be required. Requests to embed larger pipes should be accompanied by a detailed description and be submitted to the architect for evaluation. Aluminum conduits shall not be placed in concrete.

RC-8 Provide construction joints in accordance with ACI 318, Section 26.5.6. Provide keyways and adequate dowels. Submit drawings showing location of construction joints and direction of pour for review.

RC-9 Provide reinforcing steel installer with a set of Structural Drawings for field reference. Inspect reinforcing steel placing from structural drawings.

POST-INSTALLED ANCHORS - GENERAL

AN-1 Substitution requests will be considered for products having an ICC-ES report recognizing the product for the appropriate application. Substitute concrete anchors must be approved for use in cracked concrete. Substitution requests shall include signed and sealed calculations prepared by a Florida Licensed Engineer who demonstrates that substituted product is capable of achieving the equivalent performance values of the design basis product.

AN-2 Confirm the absence of reinforcing steel by drilling a 1/4" diameter pilot hole for each anchor in non-post-tension applications. For post-tensioned slabs, confirm the absence of reinforcing steel by nondestructive testing prior to drilling holes. Do not cut reinforcing steel without approval of the Structural Engineer.

AN-3 Install in accordance with manufacturer's printed installation instructions (MPII) (ACI 314-19, 26.7.2). Refer to MPII for appropriate drill size. Clean hole and remove dust.

AN-4 Anchors listed below may not be used to substitute the specified anchors in a product's Notice of Acceptance (NOA) or Florida Product Approval.

AN-5 Anchors shall be installed in concrete having a minimum age of 21-days at time of anchor installation (ACI 318-19, 26.7.2(f))

POST-INSTALLED ANCHORS - MECHANICAL ANCHORS

AN-6 For anchoring into concrete: Wedge-Type Mechanical anchors shall have been tested and qualified for use in accordance with ACI 355.2 and ICC-ES AC193. Pre-approved anchors include Hilti Kwik Bolt TZ, DeWalt Power-Stud+SD1, and Simpson Strong-Bolt 2.

POST-INSTALLED ANCHORS - SCREW ANCHORS

AN-7 For anchoring into concrete: Screw anchors shall have been tested and qualified for use in accordance with ACI 355.2 and ICC-ES AC193. Pre-approved anchors include the ¼"Ø Hilti KH-EZ and the ¼"Ø DeWalt Screw Bolt +.

POST-INSTALLED ANCHORS - ADHESIVE ANCHORS

AN-8 Install adhesive anchors in accordance with manufacturer's requirements for concrete age, temperature, moisture condition, acceptable drilling methods, and hole preparation in conformance with ACI 318-14, 17.8.2.1.

AN-9 For anchoring into concrete: Adhesive anchors shall have been tested and qualified for use in accordance with ACI 355.4 and ICC-ES AC308. Pre-approved standard cure time adhesives include Hilti RE500v3, DeWalt Pure 110+, and Simpson Set-XP.

AN-10 Threaded rods for use with adhesive are galvanized ASTM F1554 Grade 36 U.O.N.

LIGHT GAUGE STEEL FRAMING (LTGFRM)

LG-1 Fabricate and erect stud construction in accordance with the "Standard for Cold-Formed Steel Framing-General Provisions", American Iron and Steel Institute and General Notes.

LG-2 Light gauge steel framing shall be formed from steel having a galvanized coating meeting the requirements of ASTM A653. Yield strength for 16 GA (54mil) or heavier shall be 50ksi and for 18 GA (43mil) and lighter shall be 33ksi. Alternatively, yield strength for 18mil may be 70ksi to achieve a 20GA equivalent.

LG-3 Use galvanized steel Track, minimum 350T137-33 for 4" walls and 600T137-33 for 6" walls, at top and bottom light gauge wall studs fastened to each stud with #10 tek screws each side of wall.

LG-4 Splicing of framing components, other than the continuous track at the top and bottom of walls, is not permitted, u.o.n. Splicing of track used in the construction of the jamb, head or sill assemblies of framed wall openings is not permitted. Where splicing of track is necessary between stud spacings, a section of stud shall be placed in the adjoining tracks across the joint and fastened to the flanges at both sides of the wall. Holes or notches in headers are not permitted unless approved in writing by the Engineer of Record or as shown on the drawings.

LG-5 Use 0.157" diameter powder actuated fasteners with a minimum of 1" embedment spaced at 24" o.c., U.O.N.

LG-6 Screws, where required, shall meet the minimum requirements of SAE J-429 Grade 5 and IFI-105. Screws shall have a protective coating equivalent to cadmium or zinc plating, ASTM B766.

LG-7 Field cutting of LTGFRM framing members shall be by saw or shear. Torch cutting is not permitted.

BLISS & NYITRAY, INC.
STRUCTURAL ENGINEERS
FL Certificate of Authorization No. 674
www.bnieng.com BNI Proj. No.24009.12
10440 N. Central Expressway, Ste 1530
Dallas, Texas 75231
Tel. (214) 432-8232
Adam R. Phelps, P.E. FL Reg. No. 98959

To the best of the Structural Engineer's knowledge, the Plans and Specifications comply with the applicable minimum building codes.

PERMIT SET - FOR CONSTRUCTION USE

© 2022 STARBUCKS COFFEE COMPANY

STARBUCKS®
2401 UTAH AVENUE SOUTH
SEATTLE, WASHINGTON 98134
(206) 318-1575

THESE DRAWINGS AND THE PROJECT MANUAL ARE CONFIDENTIAL AND SHALL REMAIN THE SOLE PROPERTY OF STARBUCKS CORPORATION, WHICH IS THE OWNER OF THE COPYRIGHT IN THIS WORK. THEY SHALL NOT BE REPRODUCED (IN WHOLE OR IN PART), SHARED WITH THIRD PARTIES OR USED IN ANY MANNER ON OTHER PROJECTS OR EXTENSIONS TO THIS PROJECT WITHOUT THE PRIOR WRITTEN CONSENT OF STARBUCKS CORPORATION. THESE DRAWINGS AND SPECIFICATIONS ARE INTENDED TO EXPRESS DESIGN INTENT FOR A PROTOTYPICAL STARBUCKS STORE (WHICH IS SUBJECT TO CHANGE AT ANYTIME) AND DO NOT REFLECT ACTUAL SITE CONDITIONS. NEITHER PARTY SHALL HAVE ANY OBLIGATION NOR LIABILITY TO THE OTHER (EXCEPT STATED ABOVE) UNTIL A WRITTEN AGREEMENT IS FULLY EXECUTED BY BOTH PARTIES.

STARBUCKS TEMPLATE VERSION: i2023.04.24

ADAM R. PHELPS,
P.E. No. 98959

Gensler
MAIN OFFICE
M. ARTHUR GENSLER JR. & ASSOCIATES
FL QUALIFIER'S LIC. NO. AR96486
45 FREMONT ST, SUITE 1500
SAN FRANCISCO, CA 94105 USA
Tel (415) 433.3700
Fax (415) 836.4599
SATELLITE OFFICE
M. ARTHUR GENSLER JR. & ASSOCIATES
FL QUALIFIER'S LIC. NO. AA0002837
545 NW 26TH ST
SUITE 250
MIAMI, FL 33127 USA
Tel (305) 350.7070
Fax (305) 350.7071

PROJECT NAME:
ST LUCIE WEST & SW
CASHEMERE BLVD

PROJECT ADDRESS:
920 SW SAINT LUCIE BLVD, PORT
ST.LUCIE, FL 34986

STORE #:	81616
PROJECT #:	101357-001
ISSUE DATE:	06-27-2025
DESIGN MANAGER:	JF
PRODUCTION DESIGNER:	JM
CHECKED BY:	AP

Revision Schedule

Rev	Date	By	Description

SHEET TITLE:
STRUCTURAL NOTES

SCALE: AS SHOWN

SHEET NUMBER:
S1.00

STRUCTURAL PLAN SPECIFICATIONS

GENERAL NOTES

SGN-1 These Plan Specifications are intended to be used for projects without Project Specification Books. If they are accidentally issued along with a Project Specification Books, the Project Specification Books shall supersede the Plan Specifications.

RISK CATEGORY	1.0 MULITPLIER	0.60 MULITPLIER	0.42 MULITPLIER
Risk Category II	700 YEAR MRI	50-YEAR MRI	25-YEAR MRI

SHOP DRAWINGS AND SUBMITTALS

SSD-1 Material substitution shall not be submitted in the shop drawings without a substitution request being made to the Architect in advance and in writing, along with detailed substitution cost savings to be credited to the Owner. Upon approval by the Architect, the material substitution can be included in the submitted shop drawings.

SSD-2 All structural Shop Drawings shall be submitted in PDF format to BNI for review and approval. Submittals shall be reviewed and electronically stamped by the Contractor as having “No Exception Taken”.

SSD-3 Manufacturer Literature and Product Data shall be submitted in PDF format. The submittals will be stamped as “Received, for record only” by BNI and returned accordingly.

REINFORCED CONCRETE

SRC-1 Prepare and submit formwork shop drawings in compliance with ACI 301 and ACI 347R. Formwork design for safety, structural adequacy, and efficiency is the Contractor’s responsibility.

SRC-2 Provide form-facing panels that will provide continuous, true, and smooth concrete surfaces.

SRC-3 Formwork for the sides of beams, walls, columns, and similar elements, that does not support the weight of concrete may be removed after curing at not less than 50 degrees for 24 hours after placing concrete if concrete is hard enough to not be damaged by form removal.

SRC-4 Prepare and submit reinforcing steel shop drawings prepared according to ACI 315 and ACI SP-66. Include bar sizes, length, material, grade, bar schedules, stirrup spacing, bent bar diagrams, arrangement location of splices, length of splices, tie spacing, hoop spacing and supports of reinforcement.

SRC-5 Fabricate and install steel reinforcement according to CRSI’s “Manual of Standard Practice.”

SRC-6 Clean reinforcement of loose rust and mill scale, earth, ice, and other foreign materials that reduce bond to concrete.

SRC-7 Submit design mixes for each concrete mix for the following concrete grades:

Element	Strength	Air Yes/No	Max. Aggregate Size	W/C or W/(C&P)*	Exposure Class*
Slab on Grade	3500	N	1”	0.60	S0

* Letter in Exposure Category denotes Exposure Class:
S: Sulfate.

SRC-8 The minimum portland cement content of any concrete mix with slag cement is 280 lbs/CY, for all other concrete mixes, the minimum portland cement content is 423 lbs/CY. Limit percentage, by weight, of cementitious materials other than portland cement in concrete as follows:

A. Concrete mixes containing fly ash: 15%-20%.
B. Concrete mixes containing slag cement: 40%-50%.
C. Concrete mixes containing fly ash and slag cement: 50% with fly ash or slag not exceeding 25%.

SRC-9 Provide concrete having entrained air content of 3%-5% except 1%-3% for concrete to receive a hard trowel finish (floor slabs).

SRC-10 Place concrete within 90 minutes of adding water to the mix. The Contractor may request additional time from the special inspector who can authorize an additional 30 minutes.

SRC-11 The amount of water added to the mix at the site is limited to the amount identified on the batch ticket as that being withheld at the batch plant. Water shall be added prior to initial discharge of concrete. No water can be added at the site if the batch ticket does not clearly identify the amount withheld at the plant. No water may be added once concrete placement has started.

SRC-12 Provide batch ticket for each ready-mixed batch discharged and used in the Work, indicating Project identification name and number, date, mix type and number, batch time, mix time, quantity, and amount of water added, and amount withheld at the plant. Record approximate location of final deposit in structure.

SRC-13 Deposit concrete continuously in one layer or in horizontal layers so that no new concrete will be placed on concrete that has hardened. Avoid inclined construction joints. Consolidate concrete with mechanical vibrating equipment. Do not use vibrators to transport concrete inside forms.

SRC-14 Cure concrete according to ACI 308.1 and as follows:

A. Curing Compound: Apply to all concrete surfaces that are not permanently exposed. Provide a second coat applied at 90 degrees to initial application within three hours of initial application.
B. Curing and Sealing Compound: Apply to permanently exposed concrete surfaces. Repeat process after 24 hours.
C. Contractor shall confirm that curing compounds are compatible with flooring finishes and will not adversely affect the performance or warranty of the flooring.

SRC-15 Sample all concrete after water and admixtures have been added. Obtain at least one composite sample for each 100 CY or fraction thereof of each concrete mix placed daily. For slabs 6 inches or thinner, increase frequency to each 50 CY or fraction thereof of each concrete mix placed daily.

SRC-16 Cast and laboratory cure one set of four standard cylinder specimens for each composite sample. Take sample at point of placement for pumped concrete.

SRC-17 Test one specimen at 7-days and three at 28-days. If one of the first two 28-day test falls below specified strength, test the remaining specimen at 56-days.

SRC-18 Strength of each concrete mix will be satisfactory if the average of two cylinders at 28-days equals or exceeds the specified concrete strength, if not, then the average of any three consecutive strength tests (two at 28-days and one at 56-day) equals or exceeds specified compressive strength and no compressive strength test falls below specified compressive strength by 10% or 500 psi, whichever is less.

SRC-19 Provide test results to Architect, Engineer, and Concrete Company.

Contractor shall notify Architect and BNI of any concrete that fails to meet the design strength. Additional testing including destructive testing may be required to validate the in-place concrete strength. Testing with a Swiss Hammer is not an acceptable method of establishing in-place concrete strength.

BLISS & NYITRAY, INC.
STRUCTURAL ENGINEERS
FL Certificate of Authorization No. 674
www.bnienginеers.com BNI Proj. No.24D09.12
10440 N. Central Expressway, Ste 1530
Dallas, Texas 75231
Tel. (214) 432-8232
Adam R. Phelps, P.E. FL Reg. No. 98959

To the best of the Structural Engineer’s knowledge, the Plans and Specifications comply with the applicable minimum building codes.

PERMIT SET - FOR CONSTRUCTION USE

© 2022 STARBUCKS COFFEE COMPANY

STARBUCKS®
2401 UTAH AVENUE SOUTH
SEATTLE, WASHINGTON 98134
(206) 318-1575

THESE DRAWINGS AND THE PROJECT MANUAL ARE CONFIDENTIAL AND SHALL REMAIN THE SOLE PROPERTY OF STARBUCKS CORPORATION, WHICH IS THE OWNER OF THE COPYRIGHT IN THIS WORK. THEY SHALL NOT BE REPRODUCED (IN WHOLE OR IN PART), SHARED WITH THIRD PARTIES OR USED IN ANY MANNER ON OTHER PROJECTS OR EXTENSIONS TO THIS PROJECT WITHOUT THE PRIOR WRITTEN CONSENT OF STARBUCKS CORPORATION. THESE DRAWINGS AND SPECIFICATIONS ARE INTENDED TO EXPRESS DESIGN INTENT FOR A PROTOTYPICAL STARBUCKS STORE (WHICH IS SUBJECT TO CHANGE AT ANYTIME) AND DO NOT REFLECT ACTUAL SITE CONDITIONS. NEITHER PARTY SHALL HAVE ANY OBLIGATION NOR LIABILITY TO THE OTHER (EXCEPT STATED ABOVE) UNTIL A WRITTEN AGREEMENT IS FULLY EXECUTED BY BOTH PARTIES.

STARBUCKS TEMPLATE VERSION: i2023.04.24

ADAM R. PHELPS,
P.E. No. 98959

Gensler
MAIN OFFICE
M. ARTHUR GENSLER JR. & ASSOCIATES
FL QUALIFIER'S LIC. NO. AR96486
45 FREMONT ST, SUITE 1500
SAN FRANCISCO, CA 94105 USA
Tel (415) 433.3700
Fax (415) 836.4599

SATELLITE OFFICE
M. ARTHUR GENSLER JR. & ASSOCIATES
FL QUALIFIER'S LIC. NO. AA0002837
545 NW 26TH ST
SUITE 250
MIAMI, FL 33127 USA
Tel (305) 350.7070
Fax (305) 350.7071

PROJECT NAME:
ST LUCIE WEST & SW
CASHEMERE BLVD

PROJECT ADDRESS:
920 SW SAINT LUCIE BLVD, PORT
ST.LUCIE, FL 34986

STORE #: 81616
PROJECT #: 101357-001
ISSUE DATE: 06-27-2025
DESIGN MANAGER: JF
PRODUCTION DESIGNER: JM
CHECKED BY: AP

Revision Schedule

Rev	Date	By	Description

SHEET TITLE:
STRUCTURAL PLAN SPECIFICATIONS
SCALE: AS SHOWN

SHEET NUMBER:
S1.01

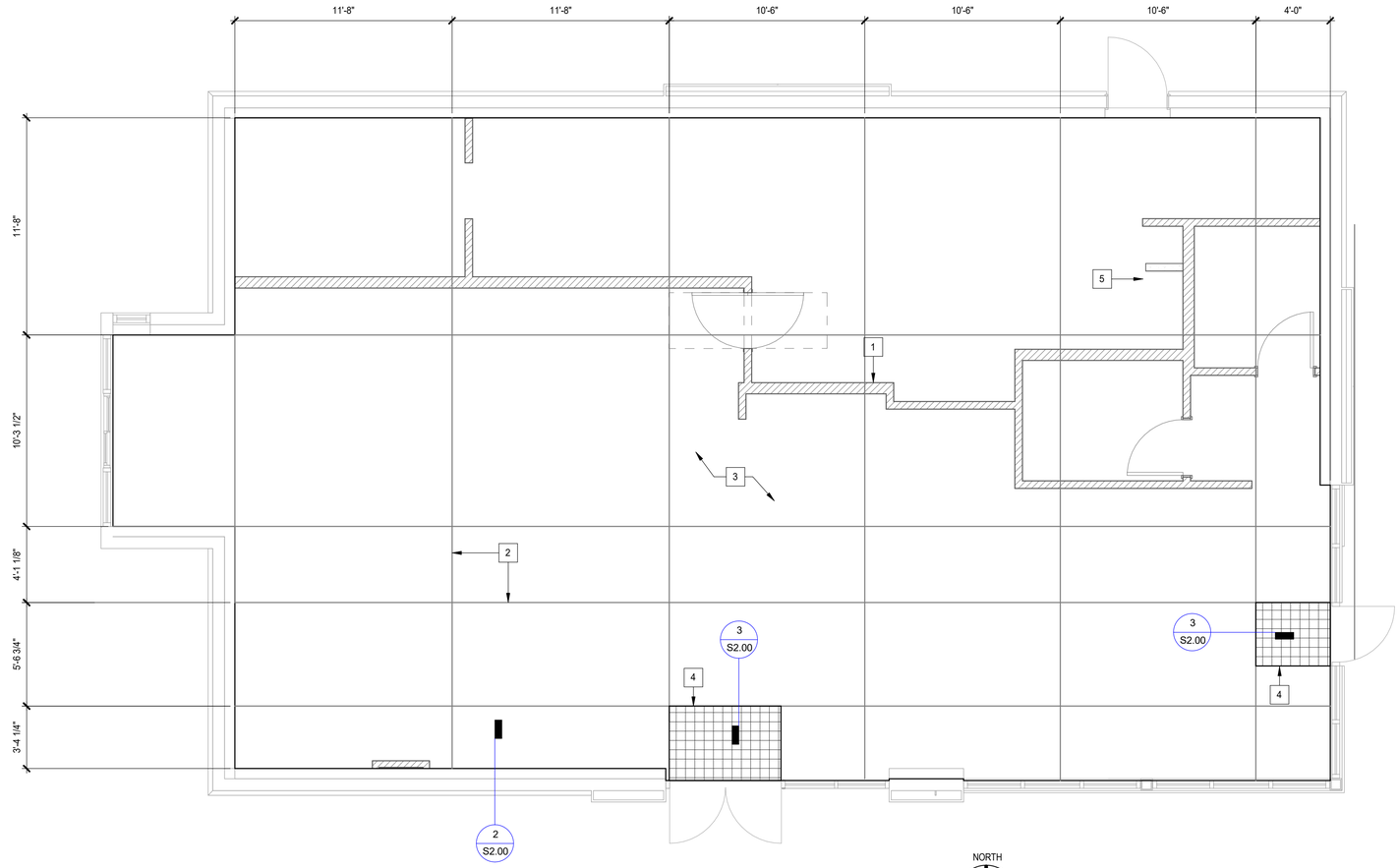

FIRST LEVEL

1/4" = 1'-0"

NORTH

PLAN KEYNOTES:

1. INTERIOR LIGHT GAUGE STUDS PER S3.01. SEE ARCH FOR WIDTH AND HEIGHT.
2. CONTROL JOINTS, SEE 1/S2.00.
3. 4" CONCRETE SLAB ON GRADE REINFORCE WITH 6x6-W2.9xW2.9 WELDED WIRE REINFORCEMENT (W.W.R).
4. RECESSED CONCRETE SLAB FOR WALK-OFF MAT, SEE ARCH.
5. RAISED WATER HEATER, SEE S3.00

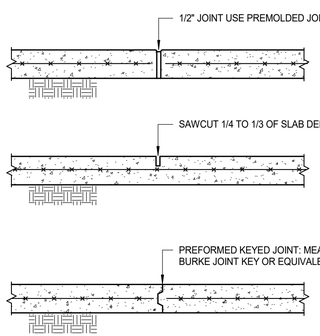

*PROVIDE SEALANT WHERE REQUIRED BY ARCHITECT SAWCUT AS SOON AS POSSIBLE AFTER CONCRETE HARDENS. SAW CUTTING MUST BE COMPLETE WITHIN 8 HRS. AFTER POURING.

1 SLAB ON GRADE CONTROL JOINTS

3/4" = 1'-0"

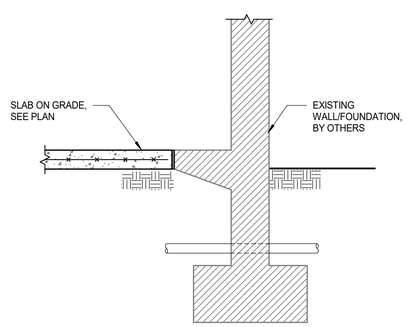

2 WALL FOOTING DETAIL

AT EXTERIOR

3/4" = 1'-0"

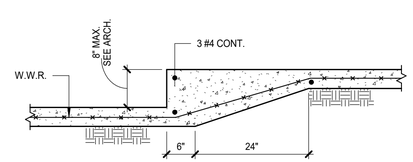

3 TYPICAL SLAB STEP DETAILS

3/4" = 1'-0"

NOTE:
TERMITE PROTECTION SHALL BE PROVIDED WITH REGISTERED TERMITICIDES. UPON COMPLETING THE APPLICATION OF THE TERMITE PROTECTIVE TREATMENT, A CERTIFICATE OF COMPLIANCE SHALL BE ISSUED TO THE BUILDING DEPARTMENT BY THE LICENSED PEST CONTROL COMPANY THAT CONTAINS THE FOLLOWING STATEMENT, "THE AREAS UNDERNEATH NEW SLABS-ON-GRADE HAVE RECEIVED A COMPLETE TREATMENT FOR THE PREVENTION OF SUBTERRANEAN TERMITES. TREATMENT IS IN ACCORDANCE WITH RULES AND LAWS ESTABLISHED BY THE FLORIDA DEPARTMENT OF AGRICULTURE AND CONSUMER SERVICES." REFER TO FBC SECTION 1816 FOR ADDITIONAL INFORMATION.

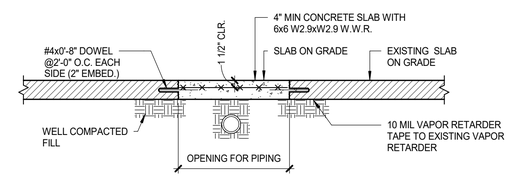

4 TRENCH REPAIR DETAIL

AS REQ'D BY ARCHITECT

3/4" = 1'-0"

BLISS & NYITRAY, INC.
STRUCTURAL ENGINEERS
FL Certificate of Authorization No. 674
www.bnieng.com BNI Proj. No.24D09.12
10440 N. Central Expressway, Ste 1530
Dallas, Texas 75231
Tel. (214) 432-8232
Adam R. Phelps, P.E. FL Reg. No. 98959
To the best of the Structural Engineer's knowledge, the Plans and Specifications comply with the applicable minimum building codes.

PERMIT SET - FOR CONSTRUCTION USE

© 2022 STARBUCKS COFFEE COMPANY

STARBUCKS®
2401 UTAH AVENUE SOUTH
SEATTLE, WASHINGTON 98134
(206) 318-1575

THESE DRAWINGS AND THE PROJECT MANUAL ARE CONFIDENTIAL AND SHALL REMAIN THE SOLE PROPERTY OF STARBUCKS CORPORATION, WHICH IS THE OWNER OF THE COPYRIGHT IN THIS WORK. THEY SHALL NOT BE REPRODUCED (IN WHOLE OR IN PART), SHARED WITH THIRD PARTIES OR USED IN ANY MANNER ON OTHER PROJECTS OR EXTENSIONS TO THIS PROJECT WITHOUT THE PRIOR WRITTEN CONSENT OF STARBUCKS CORPORATION. THESE DRAWINGS AND SPECIFICATIONS ARE INTENDED TO EXPRESS DESIGN INTENT FOR A PROTOTYPICAL STARBUCKS STORE (WHICH IS SUBJECT TO CHANGE AT ANYTIME) AND DO NOT REFLECT ACTUAL SITE CONDITIONS. NEITHER PARTY SHALL HAVE ANY OBLIGATION NOR LIABILITY TO THE OTHER (EXCEPT STATED ABOVE) UNTIL A WRITTEN AGREEMENT IS FULLY EXECUTED BY BOTH PARTIES.

STARBUCKS TEMPLATE VERSION: i2023.04.24

ADAM R. PHELPS,
P.E. No. 98959

Gensler
MAIN OFFICE
M. ARTHUR GENSLER JR. & ASSOCIATES
FL QUALIFIER'S LIC. NO. AR96486
45 FREMONT ST, SUITE 1500
SAN FRANCISCO, CA 94105 USA
Tel (415) 433.3700
Fax (415) 836.4599

SATELLITE OFFICE
M. ARTHUR GENSLER JR. & ASSOCIATES
FL QUALIFIER'S LIC. NO. AA0002837
545 NW 26TH ST
SUITE 250
MIAMI, FL 33127 USA
Tel (305) 350.7070
Fax (305) 350.7071

PROJECT NAME:
ST LUCIE WEST & SW CASHEMERE BLVD

PROJECT ADDRESS:
920 SW SAINT LUCIE BLVD, PORT ST.LUCIE, FL 34986

STORE #:	81616
PROJECT #:	101357-001
ISSUE DATE:	06-27-2025
DESIGN MANAGER:	JF
PRODUCTION DESIGNER:	JM
CHECKED BY:	AP

Revision Schedule

Rev	Date	By	Description

SHEET TITLE:
SLAB ON GRADE PLAN & DETAILS
SCALE: AS SHOWN

SHEET NUMBER:
S2.00

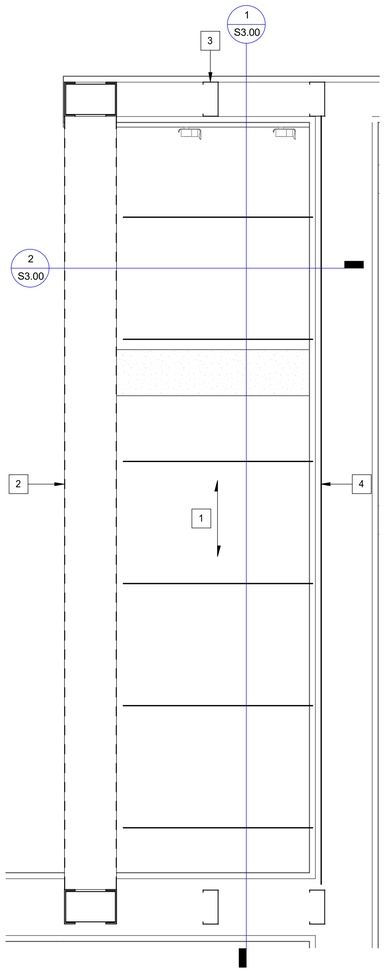

WATER HEATER PLATFORM PLAN

1 1/2" = 1'-0"

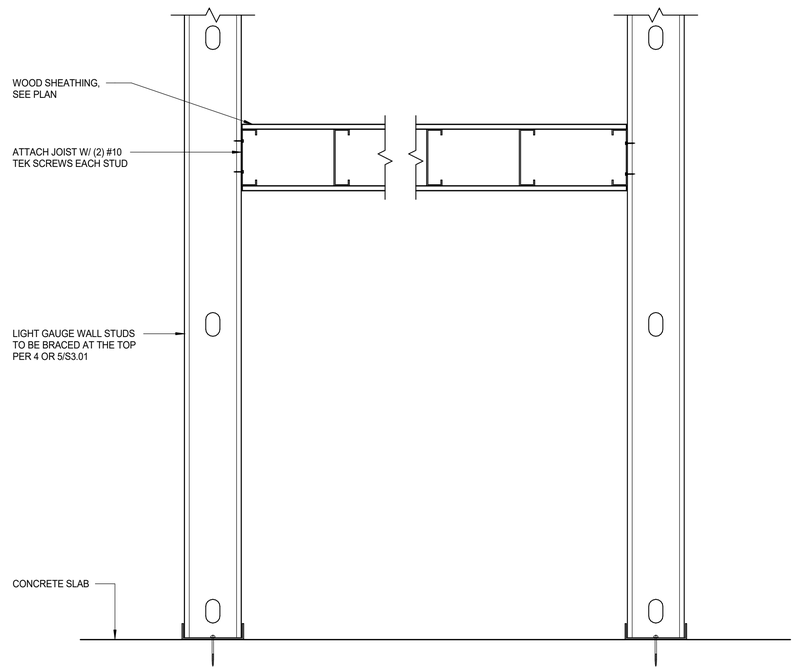

1 WATER HEATER PLATFORM SECTION

1 1/2" = 1'-0"

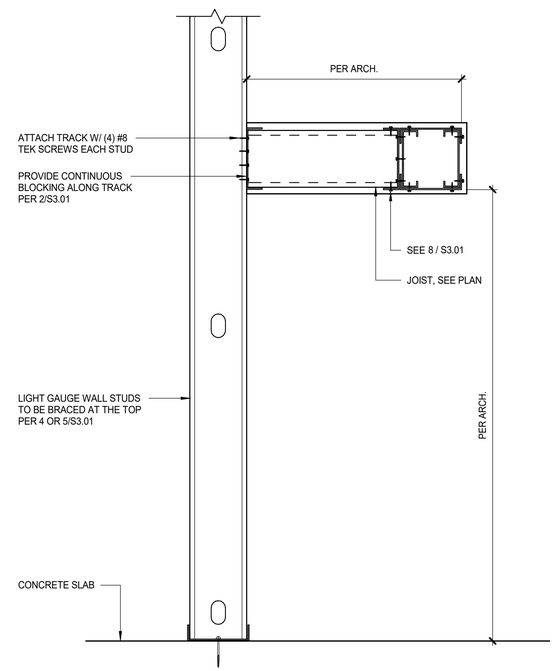

2 WATER HEATER PLATFORM SECTION

1 1/2" = 1'-0"

PLAN KEYNOTES:

1. 3/4" FRT WOOD SHEATHING ATTACHED TO 600S137-68 JOISTS @10" O.C. W/ #10 TEK SCREWS @6"O.C.
2. LIGHT GAUGE HEADER AND ATTACHMENT PER 7/S3.01.
3. LIGHT GAUGE STUDS PER 2/S3.01.
4. 600S137-68 LIGHT GAUGE TRACK.

BLISS & NYITRAY, INC.
STRUCTURAL ENGINEERS
FL Certificate of Authorization No. 674
www.bnieng.com BNI Proj. No.24009.12
10440 N. Central Expressway, Ste 1530
Dallas, Texas 75231
Tel. (214) 432-8232
Adam R. Phelps, P.E. FL Reg. No. 98959

To the best of the Structural Engineer's knowledge, the Plans and Specifications comply with the applicable minimum building codes.

PERMIT SET - FOR CONSTRUCTION USE

© 2022 STARBUCKS COFFEE COMPANY

STARBUCKS®
2401 UTAH AVENUE SOUTH
SEATTLE, WASHINGTON 98134
(206) 318-1575

THESE DRAWINGS AND THE PROJECT MANUAL ARE CONFIDENTIAL AND SHALL REMAIN THE SOLE PROPERTY OF STARBUCKS CORPORATION, WHICH IS THE OWNER OF THE COPYRIGHT IN THIS WORK. THEY SHALL NOT BE REPRODUCED (IN WHOLE OR IN PART), SHARED WITH THIRD PARTIES OR USED IN ANY MANNER ON OTHER PROJECTS OR EXTENSIONS TO THIS PROJECT WITHOUT THE PRIOR WRITTEN CONSENT OF STARBUCKS CORPORATION. THESE DRAWINGS AND SPECIFICATIONS ARE INTENDED TO EXPRESS DESIGN INTENT FOR A PROTOTYPICAL STARBUCKS STORE (WHICH IS SUBJECT TO CHANGE AT ANYTIME) AND DO NOT REFLECT ACTUAL SITE CONDITIONS. NEITHER PARTY SHALL HAVE ANY OBLIGATION NOR LIABILITY TO THE OTHER (EXCEPT STATED ABOVE) UNTIL A WRITTEN AGREEMENT IS FULLY EXECUTED BY BOTH PARTIES.

STARBUCKS TEMPLATE VERSION: i2023.04.24

ADAM R. PHELPS,
P.E. No. 98959

Gensler
MAIN OFFICE
M. ARTHUR GENSLER JR. & ASSOCIATES
FL QUALIFIER'S LIC. NO. AR96486
45 FREMONT ST, SUITE 1500
SAN FRANCISCO, CA 94105 USA
Tel (415) 433.3700
Fax (415) 836.4599

SATELLITE OFFICE
M. ARTHUR GENSLER JR. & ASSOCIATES
FL QUALIFIER'S LIC. NO. AA0002837
545 NW 26TH ST
SUITE 250
MIAMI, FL 33127 USA
Tel (305) 350.7070
Fax (305) 350.7071

PROJECT NAME:
ST LUCIE WEST & SW CASHEMERE BLVD

PROJECT ADDRESS:
920 SW SAINT LUCIE BLVD, PORT ST.LUCIE, FL 34986

STORE #:	81616
PROJECT #:	101357-001
ISSUE DATE:	06-27-2025
DESIGN MANAGER:	JF
PRODUCTION DESIGNER:	JM
CHECKED BY:	AP

Revision Schedule

Rev	Date	By	Description

SHEET TITLE:
LIGHT GAUGE PLAN & DETAILS
SCALE: AS SHOWN

SHEET NUMBER:
S3.00

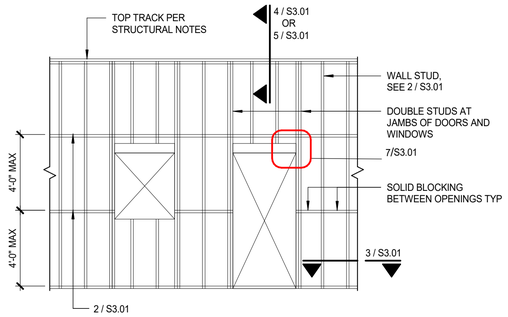

1 TYPICAL LIGHT GAGE WALL FRAMING

1 1/2" = 1'-0"

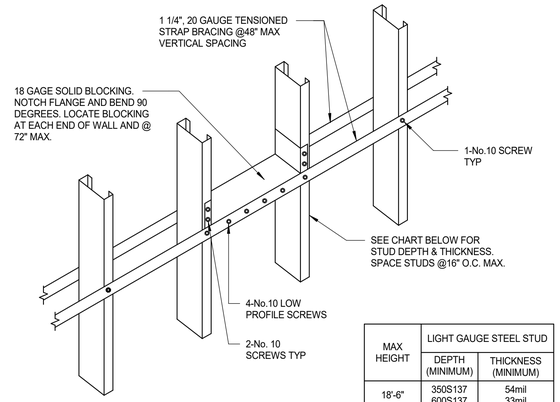

MAX HEIGHT	LIGHT GAUGE STEEL STUD	
	DEPTH (MINIMUM)	THICKNESS (MINIMUM)
18'-6"	350S137 600S137	54mil 33mil
12'-6"	350S137 600S137	33mil 33mil

NOTE:
STRAP MUST BE TENSIONED.
SEE DETAIL FOR PROCEDURE.

2 INTERIOR STUD WALL

HORIZONTAL BRIDGING

1 1/2" = 1'-0"

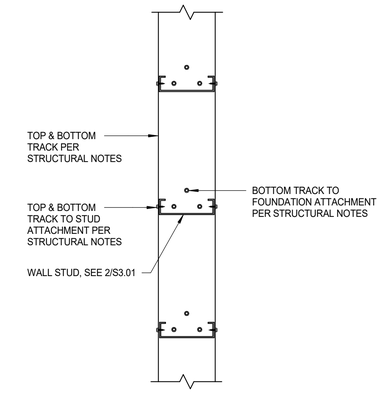

3 LIGHT GAGE STEEL TRACK CONNECTION

PLAN VIEW

1 1/2" = 1'-0"

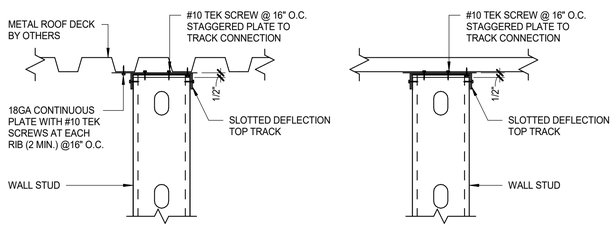

4 TOP OF INTERIOR WALL

NON-LOAD BEARING TO ROOF DECK

1 1/2" = 1'-0"

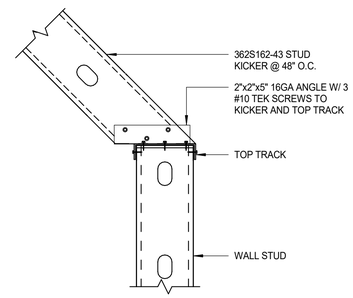

5 LIGHT GAUGE KICKER CONNECTION

AT TOP OF WALL FRAMING

1 1/2" = 1'-0"

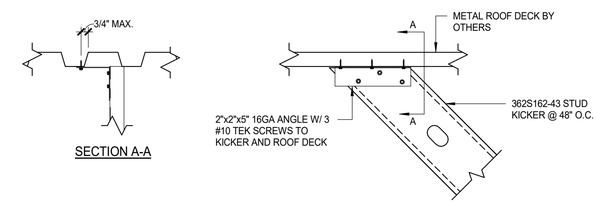

6 LIGHT GAUGE KICKER CONNECTION

AT BOTTOM OF ROOF FRAMING

1 1/2" = 1'-0"

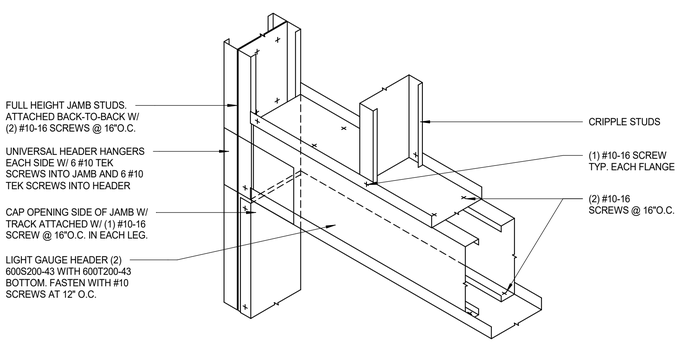

7 LIGHT GAUGE HEADER

3/4" = 1'-0"

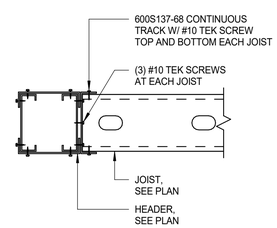

8 JOIST TO HEADER ATTACHMENT

1 1/2" = 1'-0"

BLISS & NYITRAY, INC.
STRUCTURAL ENGINEERS
FL Certificate of Authorization No. 674
www.bnieng.com BNI Proj. No.24009.12
10440 N. Central Expressway, Ste 1530
Dallas, Texas 75231
Tel. (214) 432-8232
Adam R. Phelps, P.E. FL Reg. No. 98959
To the best of the Structural Engineer's knowledge, the Plans and Specifications comply with the applicable minimum building codes.

PERMIT SET - FOR CONSTRUCTION USE

© 2022 STARBUCKS COFFEE COMPANY

STARBUCKS®
2401 UTAH AVENUE SOUTH
SEATTLE, WASHINGTON 98134
(206) 318-1575

THESE DRAWINGS AND THE PROJECT MANUAL ARE CONFIDENTIAL AND SHALL REMAIN THE SOLE PROPERTY OF STARBUCKS CORPORATION, WHICH IS THE OWNER OF THE COPYRIGHT IN THIS WORK. THEY SHALL NOT BE REPRODUCED (IN WHOLE OR IN PART), SHARED WITH THIRD PARTIES OR USED IN ANY MANNER ON OTHER PROJECTS OR EXTENSIONS TO THIS PROJECT WITHOUT THE PRIOR WRITTEN CONSENT OF STARBUCKS CORPORATION. THESE DRAWINGS AND SPECIFICATIONS ARE INTENDED TO EXPRESS DESIGN INTENT FOR A PROTOTYPICAL STARBUCKS STORE (WHICH IS SUBJECT TO CHANGE AT ANYTIME) AND DO NOT REFLECT ACTUAL SITE CONDITIONS. NEITHER PARTY SHALL HAVE ANY OBLIGATION NOR LIABILITY TO THE OTHER (EXCEPT STATED ABOVE) UNTIL A WRITTEN AGREEMENT IS FULLY EXECUTED BY BOTH PARTIES.

STARBUCKS TEMPLATE VERSION: i2023.04.24

ADAM R. PHELPS,
P.E. No. 98959

Gensler
MAIN OFFICE
M. ARTHUR GENSLER JR. & ASSOCIATES
FL QUALIFIER'S LIC. NO. AR96486
45 FREMONT ST, SUITE 1500
SAN FRANCISCO, CA 94105 USA
Tel (415) 433.3700
Fax (415) 836.4599
SATELLITE OFFICE
M. ARTHUR GENSLER JR. & ASSOCIATES
FL QUALIFIER'S LIC. NO. AA0002837
545 NW 26TH ST
SUITE 250
MIAMI, FL 33127 USA
Tel (305) 350.7070
Fax (305) 350.7071

PROJECT NAME:
ST LUCIE WEST & SW
CASHEMERE BLVD

PROJECT ADDRESS:
920 SW SAINT LUCIE BLVD, PORT
ST.LUCIE, FL 34986

STORE #:	81616
PROJECT #:	101357-001
ISSUE DATE:	06-27-2025
DESIGN MANAGER:	JF
PRODUCTION DESIGNER:	JM
CHECKED BY:	AP

Revision Schedule

Rev	Date	By	Description

SHEET TITLE:
LIGHT GAUGE DETAILS

SCALE: AS SHOWN

SHEET NUMBER:
S3.01

ELECTRIC LEGEND

SYMBOL	DESCRIPTION
LIGHTING AND LIGHTING CONTROLS	
WALL MOUNT	SINGLE / DOUBLE SIDED EXIT SIGN CONNECT AHEAD OF SWITCHING & CONFIGURE ARROWS TO INDICATE DIRECTION OF EGRESS TRAVEL
	OUTDOOR AREA SITE LIGHTING STANDARD NUMBER OF LUMINAIRE HEADS AS INDICATED ON DRAWINGS.
$	LIGHTING SWITCH (KEYS: 2 = 2-POLE, 3 = 3-WAY, 4 = 4-WAY, D=DIMMER, K=KEYED, T = TIMER SWITCH, M = MOMENTARY-CONTACT, P = SWITCH W/PILOT LIGHT)
TYPE	CEILING-MOUNTED OCCUPANCY SENSOR. DUAL TECHNOLOGY UNLESS OTHERWISE NOTED BY TYPE. TYPE "IR" = INFRARED, TYPE "US" = ULTRASONIC
TYPE#	WALL-MOUNTED OCCUPANCY SENSOR SWITCH. DUAL TECHNOLOGY UNLESS OTHERWISE NOTED BY TYPE. TYPE "IR"=INFRARED, TYPE "US"=ULTRASONIC, "V"=VACANCY SENSOR, "#" = CONTROLLED CIRCUITS.
RECEPTACLES AND MISCELLANEOUS OUTLETS	
	SINGLE ("SIMPLEX"), DUPLEX, AND DOUBLE DUPLEX ("QUAD") RECEPTACLE RESPECTIVELY
	GFI / GFCI RECEPTACLES
	CEILING MOUNTED RECEPTACLES
TYPE	FLOOR OUTLET - POWER AND / OR TECHNOLOGY
H, C, T 42", W, SW, L	RECEPTACLE ATTRIBUTES 42" = MOUNT RECEPTACLE AT THIS HEIGHT ABOVE GRADE / FINISHED FLOOR C = INSTALL ABOVE COUNTER AND BACKSPLASH H = INSTALL RECEPTACLE HORIZONTALLY L = LIT (PROVIDE ILLUMINATED FACE OR INDICATOR LIGHT TO INDICATE THERE IS POWER TO RECEPTACLE) SW = SPLIT WIRED T = TAMPER-RESISTANT W = WEATHER PROOF WHILE IN USE COVER AND WEATHER RESISTANT RECEPTACLE
DOOR OPERATORS/DEVICES	
	ELECTRIC DOOR OPERATOR MANUAL (LEFT) AUTOMATIC (RIGHT)
	PUSH PLATE FOR MANUAL CONTROL OF ELECTRIC DOOR OPERATOR
MISCELLANEOUS	
T TS	LOW VOLTAGE THERMOSTAT (LEFT) AND TEMPERATURE SENSOR (RIGHT)
	INDICATES DIRECT CONNECTION TO EQUIPMENT
$ $MS $MSR	MOTOR RATED TOGGLE SWITCH, MANUAL STARTER WITH PILOT LIGHT, AND MANUAL STARTER WITH PILOT LIGHT WITH EXTERNAL RELAY FOR CONTROL OR MONITORING RESPECTIVELY - ALL MAY BE KEYED "K"
	HEAVY DUTY DISCONNECT SWITCH (NON-FUSED) (LEFT) HEAVY DUTY DISCONNECT SWITCH (FUSED) (RIGHT)
M	LINE VOLTAGE MOTOR OPERATED DAMPER
	CONTACTOR
	HAND DRYER
	ELECTRICAL PANELBOARD OR DISTRIBUTION BOARD (DIMENSIONS MAY VARY / FLUSH OR SURFACE MOUNTED AS INDICATED)
PAD POLE	OIL FILLED TRANSFORMER

ELECTRIC LEGEND

SYMBOL	DESCRIPTION
SINGLE LINE DIAGRAM	
	ELECTRIC UTILITY COMPANY METER AND ASSOCIATED CURRENT TRANSFORMERS
HD	CUSTOMER ELECTRIC METER AND ASSOCIATED CURRENT TRANSFORMERS HD = HIGH DENSITY METERING CABINET/BANK MOUNTED TO TIGHTLY GROUP ALL METERS TOGETHER
	ELECTRICAL PANELBOARD OR DISTRIBUTION BOARD
	SURGE PROTECTIVE DEVICE
ENVIRONMENTAL CONTROLS AND ALARMS	
CO	CARBON MONOXIDE SENSOR (MONITORED BY ENVIRONMENTAL CONTROL PANEL)
WIRE / CABLE / RACEWAY	
LPA-1,3	BRANCH CIRCUIT HOME RUN WITH PANEL NAME AND CIRCUIT NUMBER(S)
	CABLING / RACEWAY INSTALLED CONCEALED IN WALLS OR ABOVE CEILING
	CABLING / RACEWAY INSTALLED BELOW FLOOR OR GRADE
	CABLE TRAY
	FEEDER DUCT / BUS DUCT
J	FLUSH MOUNTED JUNCTION BOX OR PULL BOX AS APPLICABLE FOR APPLICATION
P	FLUSH MOUNTED PULL BOX
UP DN	CONDUIT UP OR DOWN

ABBREVIATIONS

42"	DISTANCE ABOVE FINISHED FLOOR / GRADE / PAVEMENT	LR	LEGALLY REQUIRED STANDBY
		LI	LONG - INSTANTANEOUS
AF	AMP FRAME OF FUSED SWITCH OR CIRCUIT BREAKER	LSI	LONG - SHORT - INSTANTANEOUS
		LSIG	LONG - SHORT - INSTANTANEOUS - GROUND FAULT
AFCI	ARC-FAULT CIRCUIT INTERRUPTER		
AT	AMP TRIP OF FUSED SWITCH OR CIRCUIT BREAKER	MCB	MAIN CIRCUIT BREAKER
		MFR	MANUFACTURER
ATS	AUTOMATIC TRANSFER SWITCH	MLO	MAIN LUGS ONLY
		MTS	MANUAL TRANSFER SWITCH
BAS	BUILDING AUTOMATION SYSTEM	MW	MICROWAVE OVEN
C.T.C.	WORK UNDER DIVISION 27 OR 28 AS APPLICABLE	NIC	NOT IN CONTRACT (SHOWN FOR REFERENCE ONLY)
C/B	CIRCUIT BREAKER	NTS	NOT TO SCALE
C / CH	COUNTER HEIGHT OR SPECIAL HEIGHT DEVICE		
DW	DISHWASHER	OFE	OWNER-FURNISHED EQUIPMENT - INSTALLED AND WIRED BY E.C.
E	EMERGENCY	OS	OPTIONAL STANDBY
E.C.	WORK UNDER DIVISION 26		
EMS	ENERGY MANAGEMENT SYSTEM	P.C.	WORK UNDER DIVISION 22
EPO	EMERGENCY POWER OFF		
ER	EQUIPMENT ROOM	(R)	RELOCATE
ERM	ENERGY REDUCTION MAINTENANCE SWITCH		
ESP	EMERGENCY STANDBY RATING	S.C.	WORK UNDER DIVISION 21
ETR	EXISTING TO REMAIN	SCCR	SHORT CIRCUIT CURRENT RATING
EWC	ELECTRIC WATER COOLER	SPD	SURGE PROTECTIVE DEVICE
EX.	EXISTING	ST	SHUNT TRIP
FBO	FURNISHED BY OTHERS - INSTALLED AND WIRED BY E.C.	TAAC	TO ABOVE ACCESSIBLE CEILING
		TR	TAMPER RESISTANT
FIBO	FURNISHED AND INSTALLED BY OTHERS - WIRED BY E.C.	TTB	TELEPHONE TERMINAL BOARD
		TYP	TYPICAL
FP	RECEPTACLE TO BE USED FOR A FLAT PANEL DISPLAY.		
FWE	FURNISHED WITH EQUIPMENT BY OTHERS - INSTALLED AND WIRED BY E.C.	UCR	UNDER COUNTER REFRIGERATOR
		UL	UNDERWRITER'S LABORATORY
		U.L.S.E.	LISTED FOR SERVICE ENTRANCE
		UNO	UNLESS NOTED OR INDICATED OTHERWISE ON DRAWINGS OR IN SPECIFICATIONS
GD	GARBAGE DISPOSAL		
GFEP	GROUND FAULT EQUIPMENT PROTECTION		
GFI / GFCI	GROUND FAULT CIRCUIT INTERRUPTER DEVICE	VFD / VSD	VARIABLE FREQUENCY / SPEED DRIVE
GND	GROUND	VIF	VERIFY IN FIELD
		VM	VENDING MACHINE
		VP	VANDAL PROOF
H.C.	WORK UNDER DIVISION 23		
H.O.A.	"HAND - OFF - AUTO" SWITCH		
		W / WP	WEATHERPROOF
IG	ISOLATED GROUND	WG	WIRE GUARD
Isc	SHORT CIRCUIT CURRENT	WR	WEATHER RESISTANT
		X	RATED FOR CLASSIFIED LOCATION

PLAN-VIEW AND GRAPHIC LINE TYPES

WORK SHOWN BOLD-CONTINUOUS INDICATES NEW WORK
(UNLESS OTHERWISE INDICATED)

WORK SHOWN FADED INDICATES EXISTING WORK TO REMAIN OR NEW WORK BY OTHERS AS APPLICABLE
(UNLESS OTHERWISE INDICATED)

WORK SHOWN BOLD-DASHED INDICATES SELECTIVE DEMOLITION WORK
(UNLESS OTHERWISE INDICATED)

ELECTRIC DESIGN CRITERIA

APPLICABLE BUILDING CODES

FBC (2023) FLORIDA BUILDING CODE
ASHRAE 90.1 (2019) ENERGY STANDARD FOR BUILDINGS EXCEPT LOW-RISE RESIDENTIAL BUILDINGS
NFPA 70 (2020) NATIONAL ELECTRIC CODE

CARBON MONOXIDE (CO) DETECTOR NOTES

COORDINATE INSTALLATION OF CARBON MONOXIDE (CO) DETECTOR DEVICE(S) AND LOW VOLTAGE WIRING WITH STARBUCKS SECURITY VENDOR FOR NEW STORES, RELOCATIONS AND MAJOR RENOVATIONS, IF IN VENDOR SCOPE. VENDOR TO PROVIDE AND INSTALL DEVICE(S) IN BOH AND FOH (AS APPLICABLE PER STARBUCKS STANDARDS).

LIGHTING CONTROL SYSTEM

THE GENERAL CONTRACTOR SHALL INSTALL TIME CLOCK AND CONTACTORS. PRIOR TO LAST WEEK OF CONSTRUCTION, IF NEEDED, FURNISH AND INSTALL TEMPORARY THERMOSTATS AND SENSORS, AND ROUTE ALL LOW VOLTAGE WIRING THROUGH EC PROVIDED CONDUITS (COORDINATE WITH ELECTRICAL).

FURNISH AND INSTALL RACEWAYS WITH PULL STRINGS AND JUNCTION BOXES FOR THERMOSTAT(S) AND SENSOR(S).

SET RESTROOM OCCUPANCY SENSOR TO 15 MINUTE 'ON' DURATION IN SINGLE OCCUPANT RESTROOM AND TO 20 MINUTE 'ON' DURATION IN MULTI-OCCUPANT RESTROOM UNLESS JURISDICTION REQUIREMENTS STATE OTHERWISE.

THE GENERAL CONTRACTOR SHALL CONTACT A THIRD PARTY VENDOR PRIOR TO THE LAST WEEK OF CONSTRUCTION FOR COMMISSIONING.

SECURITY SYSTEM NOTES

STARBUCKS CONTRACTS DIRECTLY WITH SECURITY VENDOR TO SUPPLY AND INSTALL THE SECURITY SYSTEM. CONTRACTOR TO SCHEDULE INSTALLATION OF SECURITY SYSTEM FOR FOUR (4) TIMES;

1. MEET TO PLAN SECURITY CABLE PULL WITH SECURITY CABLE INSTALLER PRIOR TO DRYWALL INSTALLATION.
2. SECURITY CABLE INSTALLER PULLS SECURITY CABLES, MOUNTS PANEL, KEYPAD AND SENSORS.
3. SECURITY EQUIPMENT INSTALL OF CAMERA, NVR AND MONITOR.
4. SECURITY MONITORING COMPANY TO BRING SYSTEM ONLINE AND TRAIN PARTNERS AFTER POS INSTALL.

SECURITY VENDOR REQUIRES A MINIMUM TWO (2) WEEKS LEAD TIME FOR EACH INSTALLATION. SECURITY VENDOR WILL COORDINATE REGIONAL INSTALLERS. ALL ADDITIONAL EXPENSES INCURRED DUE TO THE CONTRACTOR'S FAILURE TO SCHEDULE ACCORDINGLY WILL BE THE RESPONSIBILITY OF THE CONTRACTOR.

TELEPHONE SYSTEM NOTES

IF ADDITIONAL TELEPHONE LINES ARE REQUIRED BEYOND THE STANDARD SINGLE LINE (SUCH AS FOR A FIRE ALARM) THE GENERAL CONTRACTOR SHALL CONTACT THE STARBUCKS CONSTRUCTION MANAGER PRIOR TO BEGINNING CONSTRUCTION TO ORDER THE ADDITIONAL TELEPHONE LINE(S). REPORT ANY TELEPHONE INSTALLATION ISSUES IMMEDIATELY TO THE STARBUCKS CONSTRUCTION MANAGER.

CONFIRM PRIOR TO BEGINNING CONSTRUCTION THAT THERE ARE EXISTING, WORKING TELCO FACILITIES TO THE BUILDING OR THAT LANDLORD HAS FURNISHED AND INSTALLED ONE (1) 2" (51MM) MIN. (ENTRANCE) CONDUIT INCLUDING PULL STRING FROM TELCO STREET FEED LINE TO THE BUILDING AS IDENTIFIED BY THE PHONE COMPANY. NOTIFY STARBUCKS CONSTRUCTION MANAGER IMMEDIATELY IF FACILITIES OR CONDUIT AND PULL STRING ARE NOT INSTALLED.

GENERAL CONTRACTOR IS TO ENSURE THAT THERE IS A 2" (51MM) MIN. CONDUIT WITH PULL STRING FROM THE DATA RACK TO THE DEMARC (TELCO TO CUSTOMER HAND OFF EQUIPMENT) WHEN THE DEMARC IS MORE THAN 10' FROM THE DATA RACK. DISTANCES LESS THAN 10' WILL NOT REQUIRE CONDUIT.

PROVIDE A 3-POSITION GROUND LUG, GROUNDED WITH #6 AWG GROUND WIRE, IF REQUIRED BY TELEPHONE COMPANY.

ALL TELEPHONE/NETWORK CABLING IS THE SCOPE OF WORK OF THE TELEPHONE/NETWORK CABLING VENDOR.

POS \ DATA LINE NOTES

STARBUCKS CONTRACTS DIRECTLY WITH THE DATA CABLING VENDOR TO SUPPLY AND INSTALL CATEGORY 5e (CAT5e) LAN CABLE AND CONNECTORS FOR THE POINT OF SALE (POS) SYSTEMS. CONTRACTOR TO SCHEDULE INSTALLATION OF DATA CABLING WITH DATA CABLING VENDOR. DATA CABLING VENDOR REQUIRES A LEAD TIME FOR INSTALLATION. DATA CABLING VENDOR WILL COORDINATE REGIONAL INSTALLERS.

AT THE START OF CONSTRUCTION, STARBUCKS CONSTRUCTION MANAGER SCHEDULES DELIVERY OF CASH REGISTER/MANAGER'S WORKSTATION EQUIPMENT AND INSTALLATION BY A POS INSTALL TECHNICIAN FOR ONE (1) MONTH PRIOR TO STORE OPEN. CONTRACTOR TO VERIFY DELIVERY SCHEDULE TWO (2) WEEKS PRIOR TO DELIVERY AND INSTALLATION DATE. EQUIPMENT IS SHIPPED DIRECTLY TO THE STORE. CONTRACTOR TO ACCEPT POS EQUIPMENT DELIVERY. DO NOT REFUSE DELIVERY.

DATA CABLING TECHNICIAN TO PROVIDE ALL CAT5e LAN CABLING AND CONNECTORS FROM ALL DESIGNED AND FUTURE CASH REGISTER LOCATIONS, MANAGER'S WORKSTATION, ALL OTHER NETWORKED EQUIPMENT (CUP LABELERS, CLOVER, BUMP BAR, ETC...) AND WIRELESS ACCESS POINT TO THE DATA RACK AREA. CONTRACTOR IS TO HAVE CONDUIT WITH PULL STRING IN PLACE FOR ALL CABLE RUNS PRIOR TO CABLE INSTALL DATE.

STARBUCKS NEW STORE GROUP IS RESPONSIBLE FOR COORDINATING STARBUCKS POS SYSTEMS DELIVERY AND INSTALLATION WITH THE POS VENDOR. THIS GROUP MAY BE CONTACTED AT:
NEWSTORES@STARBUCKS.COM.

COMMUNICATION SYSTEM NOTES

CONFIRM PRIOR TO BEGINNING CONSTRUCTION THAT THE LANDLORD HAS FURNISHED AND INSTALLED ONE (1) ADDITIONAL 2" (51MM) (ENTRANCE) CONDUIT INCLUDING PULL STRING (FOR A TOTAL OF TWO (2)) FROM THE STREET FEED TO THE BUILDING AS IDENTIFIED BY THE INTERNET SERVICE PROVIDER.

WIRELESS NETWORK NOTES

CABLING FOR INTERNET SERVICE SHALL BE FURNISHED AND INSTALLED BY THE VENDOR FOR FIBER OR BROADBAND CONNECTIONS. T1 AND ETHERNET EXTENSION CABLING IS PROVIDED BY THE STARBUCKS (TELEPHONE/ NETWORK) CABLING VENDOR. COORDINATE WITH STARBUCKS.

MUSIC SYSTEM NOTES

MOUNT OWNER FURNISHED SPEAKERS WHERE SHOWN ON INTERIOR REFLECTED CEILING PLANS AND IN COORDINATION WITH ALL PLANS, DETAILS AND MANUFACTURER'S INSTALLATION REQUIREMENTS. INSTALL AND CONNECT OWNER FURNISHED WIRING SYSTEM BETWEEN ALL SPEAKERS AND THE OWNER PROVIDED MUSIC SYSTEM. SET WATTAGE TAP ON EACH SPEAKER'S ROTARY SWITCH PER TAP SETTINGS NOTED ON PLANS.

FIRE ALARM SYSTEM NOTES

IF STARBUCKS IS REQUIRED TO PROVIDE A FIRE ALARM AND/OR FIRE ALARM MONITORING AND/OR PHONE LINES FOR A FIRE ALARM, AS SPECIFIED IN THE LEASE AGREEMENT, THE CONTRACTOR IS TO NOTIFY GNOC IMMEDIATELY THAT FIRE ALARM LINES ARE NEEDED. STARBUCKS PREFERRED FIRE ALARM SERVICE PROVIDER, STANLEY, IS TO BE CONTACTED BY THE CONSTRUCTION MANAGER TO INSTALL FIRE ALARM PANEL AND/OR MONITORING SERVICE AS REQUIRED.

GENERAL ELECTRICAL NOTES

1. THE ELECTRICAL CONTRACTOR SHALL COORDINATE ELECTRICAL WORK WITH OTHER TRADES. THE ARCHITECTURAL DRAWINGS SHALL TAKE PRECEDENCE OVER ALL OTHER DRAWINGS. DO NOT SCALE DISTANCES OFF THE ELECTRICAL DRAWINGS; USE ACTUAL BUILDING DIMENSIONS. OVERALL CASEWORK COMPONENT DIMENSIONING ON ELECTRICAL DETAILS ARE SHOWN FOR REFERENCE AND COORDINATION ONLY. SEE PROJECT MANUAL.
2. ALL ELECTRICAL SYSTEMS SHALL BE TESTED FOR PROPER OPERATION. BALANCE ALL BRANCH CIRCUIT LOADS BETWEEN THE PHASES OF THE SYSTEM WITHIN 10% OF THE HIGHEST PHASE LOAD IN EACH PANEL BOARD.
3. THE ELECTRICAL CONTRACTOR SHALL BE RESPONSIBLE FOR DE-ENERGIZING CIRCUITS IN DEMOLITION AREAS TO INSURE A SAFE CONDITION. ELECTRICAL DEVICES AND ASSOCIATED WIRING LOCATED WITHIN THE DEMOLITION AREA THAT WILL NO LONGER BE USED SHALL BE REMOVED AND PROPERLY DISPOSED OF AT CONTRACTORS EXPENSE UNLESS OTHERWISE NOTED.
4. THE ELECTRICAL CONTRACTOR SHALL SCHEDULE ALL ELECTRICAL SYSTEM OUTAGES WITH THE GENERAL CONTRACTOR AND LANDLORD AT LEAST 24 HOURS IN ADVANCE. UNLESS APPROVED OTHERWISE ALL OUTAGES SHALL OCCUR BETWEEN 11:00PM AND 5:00AM.
5. ELECTRICAL CONTRACTOR SHALL FURNISH AND INSTALL ALL NECESSARY CONDUIT AND J-BOXES TO SUPPORT A COMPLETE SECURITY, PHONE, POS AND DATA SYSTEMS. SEE MANAGER WORKSTATION AND BAR POINT OF SALE (POS) POWER/TELECOM/SECURITY DIAGRAM. COORDINATE ALL DEVICE LOCATIONS AND MOUNTING HEIGHTS WITH SECURITY VENDOR PRIOR TO ROUGH-IN. PROVIDE END-TO-END PULL STRINGS IN ALL CONDUITS. LABEL EACH END OF THE PULL STRING WITH CONDUIT SYSTEM ("SECURITY") AND DESTINATION ("CAFÉ", "FRONT BAR", ETC.). PROVIDE INSULATED BUSHINGS ON ALL STUBBED-UP AND EXPOSED CONDUIT ENDS.
6. ELECTRICAL CONTRACTOR SHALL COORDINATE WITH THE GENERAL CONTRACTOR TO PATCH AND REPAIR ALL EXISTING WALLS, FLOORS, CEILINGS OR OTHER SURFACES IDENTIFIED TO REMAIN THAT MAY BECOME DAMAGED DURING THE COURSE OF WORK.
7. EXPOSED/SURFACE MOUNTED CONDUITS SHALL ONLY BE ALLOWED WHERE NECESSARY IN EXPOSED CEILING AREAS. IF CONDUITS NEED TO BE SURFACE MOUNTED TO WALLS, COORDINATE WITH STARBUCKS CONSTRUCTION MANAGER FOR APPROVAL.
8. VERIFY LOCATION OF ALL OUTLETS AND SWITCHES WITH ARCHITECTURAL DRAWINGS, INTERIOR DETAILS, FINISH SCHEDULES, GENERAL CONTRACTOR, EQUIPMENT VENDORS, STARBUCKS AND EXISTING SITE CONDITIONS. VERIFY FINAL DOOR HINGE LOCATION PRIOR TO SWITCH INSTALLATION AND ADJUST SWITCH LOCATION IF NEEDED. DO NOT MOUNT RECEPTACLES/SWITCHES IN LOCATIONS THAT WOULD CONFLICT WITH MIRRORS, SEAMS OF WALLS, WAINSCOTS, TILE TRANSITIONS, ETC...

GENERAL NOTES

SCOPE
THE INTENT OF THE DRAWINGS AND PROJECT MANUAL IS TO PROVIDE A COMPLETE AND FULLY OPERATIONAL ELECTRICAL SYSTEM. THE ELECTRICAL CONTRACTOR SHALL FURNISH AND INSTALL ALL LABOR, MATERIAL, AND EQUIPMENT NECESSARY TO COMPLETE THE ELECTRICAL WORK.

SITE EXAMINATION
THE ELECTRICAL CONTRACTOR SHALL THOROUGHLY EXAMINE ALL AREAS WHERE EQUIPMENT, CONDUIT, AND WIRING WILL BE INSTALLED AND WILL REPORT ANY CONDITION THAT, IN HIS OPINION, PREVENTS THE PROPER INSTALLATION OF THE ELECTRICAL WORK.

STANDARDS
EQUIPMENT AND MATERIALS SHALL CONFORM WITH APPROPRIATE PROVISIONS OF CSA, ULC, NEC, ASTM, UL, ETL, NEMA, ANSI, AS APPLICABLE TO EACH INDIVIDUAL UNIT OR ASSEMBLY.

CODES
ALL WORK SHALL BE PERFORMED IN STRICT ACCORDANCE WITH ALL APPLICABLE PROVINCIAL AND LOCAL CODES AND ORDINANCES. IN CASE OF CONFLICT BETWEEN THE DRAWINGS AND SPECIFICATIONS AND THE CODES, THE HIGHEST STANDARD SHALL APPLY. ELECTRICAL CONTRACTOR SHALL SATISFY CODE REQUIREMENTS AS A MINIMUM STANDARD WITHOUT ANY EXTRA COST TO STARBUCKS.

PERMITS AND FEES
THE ELECTRICAL CONTRACTOR SHALL PROCURE AND PAY FOR ALL PERMITS, FEES, AND INSPECTIONS NECESSARY TO COMPLETE THE ELECTRICAL WORK.

WARRANTY
THE ELECTRICAL CONTRACTOR SHALL UNCONDITIONALLY WARRANT ALL WORK TO BE FREE OF DEFECTS IN MATERIAL AND WORKMANSHIP FOR A PERIOD OF ONE (1) YEAR FROM THE DATE OF FINAL ACCEPTANCE BY STARBUCKS AND WILL REPAIR OR REPLACE ANY DEFECTIVE WORK PROMPTLY AND WITHOUT CHARGE AND RESTORE ANY OTHER EXISTING WORK DAMAGED IN THE COURSE OF REPAIRING DEFECTIVE MATERIALS AND WORKMANSHIP.

LANDLORD REQUIREMENTS

PRIOR TO BID: THE CONTRACTOR SHALL COORDINATE WITH LANDLORD / BUILDING OWNER FOR ANY CONSTRUCTION REQUIREMENTS. IF LANDLORD / BUILDING OWNER DOES HAVE REQUIREMENTS, CONTRACTOR SHALL BECOME COMPLETELY FAMILIAR WITH REQUIREMENTS AND ADHERE TO THEM. WHERE LANDLORD / BUILDING OWNER REQUIREMENTS ARE MORE STRINGENT THAN SHOWN IN THESE PLANS (IN THE OPINION OF THE ENGINEER). LANDLORD / BUILDING OWNER REQUIREMENTS SHALL GOVERN.

KLH ENGINEERS
MECHANICAL/ELECTRICAL ENGINEERS
WWW.KLHENGRS.COM
KOHRS LONNEMANN HEIL ENGINEERS, INC.
444 SOUTH FRONT STREET
COLUMBUS, OHIO 43215
800-354-9783 614-228-2180
614-228-2183 FAX
FORT THOMAS, KENTUCKY
LEXINGTON, KENTUCKY
LOUISVILLE, KENTUCKY
NEW YORK, NEW YORK

PERMIT SET - FOR CONSTRUCTION

© 2022 STARBUCKS COFFEE COMPANY

STARBUCKS COFFEE COMPANY
2401 UTAH AVENUE SOUTH
SEATTLE, WASHINGTON 98134
(206) 318-1575

THESE DRAWINGS AND PROJECT MANUAL ARE CONFIDENTIAL AND SHALL REMAIN THE SOLE PROPERTY OF STARBUCKS CORPORATION, WHICH IS THE OWNER OF THE COPYRIGHT IN THIS WORK. THEY SHALL NOT BE REPRODUCED (IN WHOLE OR IN PART), SHARED WITH THIRD PARTIES OR USED IN ANY MANNER ON OTHER PROJECTS OR EXTENSIONS TO THIS PROJECT WITHOUT THE PRIOR WRITTEN CONSENT OF STARBUCKS CORPORATION. THESE DRAWINGS AND SPECIFICATIONS ARE INTENDED TO EXPRESS DESIGN INTENT FOR A PROTOTYPICAL STARBUCKS STORE (WHICH IS SUBJECT TO CHANGE AT ANYTIME) AND DO NOT REFLECT ACTUAL SITE CONDITIONS. NEITHER PARTY SHALL HAVE ANY OBLIGATION NOR LIABILITY TO THE OTHER (EXCEPT STATED ABOVE) UNTIL A WRITTEN AGREEMENT IS FULLY EXECUTED BY BOTH PARTIES.

STARBUCKS TEMPLATE VERSION i2022.10.23

Gensler
MAIN OFFICE
M. ARTHUR GENSLER JR. & ASSOCIATES
FL QUALIFIER'S LIC. NO. AR96486
45 FREMONT ST., SUITE 1500
SAN FRANCISCO, CA 94105 USA
Tel (415) 433.3700
Fax (415) 836.4599
SATELLITE OFFICE
10 NORTH PARK PLACE
SUITE 400
MORRISTOWN, NJ 07960 USA
Tel (973) 290.8500

PROJECT NAME:
ST LUCIE WEST & SW
CASHEMERE BLVD

PROJECT ADDRESS:
920 SW SAINT LUCIE BLVD,
PORT ST.LUCIE, FL 34986

STORE #: 81616
PROJECT #: 101357-001
ISSUE DATE: 06-27-2025
STORE DESIGNER: ASHLEY SUEIRAS
DESIGN MANAGER: GENSLER
ENGINEER OF RECORD: KLH ENGINEERS

Revision Schedule

Rev	Date	By	Description

SHEET TITLE:
ELECTRICAL NOTES

SCALE: AS SHOWN

SHEET NUMBER:
E001

9/4/2025 2:17:03 PM C:\Users\lheil\Documents\Revit\27472.00-23-MEP-SBX- Port St. St. Lucie, FL_lheil.rvt

SYSTEM COMMISSIONING

CONTRACTOR RESPONSIBILITIES FOR BUILDING COMMISSIONING

CONTRACTOR SHALL PROVIDE SUPPORT AND WORK AS SPECIFIED, NEEDED AND REQUIRED TO CONDUCT AND FACILITATE STARBUCKS STAFF BUILDING COMMISSIONING EFFORTS. THIS WORK WILL BE COMPRISED OF THREE DISTINCT EFFORTS:

1) SUPPORT STARBUCKS COMMISSIONING AGENT (CXA) DURING INSTALLATION VERIFICATION AND CORRECT DISCLOSED DEFICIENCIES;

2) PERFORM TESTING, ADJUSTING, BALANCING AND SYSTEM STARTUP AND SUPPORT FUNCTIONAL PERFORMANCE TESTING BY STARBUCKS CXA;

3) CORRECT DEFICIENCIES DISCLOSED BY FUNCTIONAL PERFORMANCE TESTING AND SUBMIT REPORTS. CONTRACTOR SHALL PERFORM AND PROVIDE THE FOLLOWING:

   A. SYSTEMS SUBJECT TO COMMISSIONING MAY INCLUDE, BUT ARE NOT LIMITED TO DOMESTIC HOT WATER GENERATION, HVAC SYSTEMS, ROOFTOP UNITS, EXHAUST FANS, HVAC CONTROLS, LIGHTING CONTROLS, AIR CURTAINS, BUILT-IN REFRIGERATION EQUIPMENT, AND RENEWABLE ENERGY SYSTEMS.

   B. CONTRACTOR SHALL INCLUDE COMMISSIONING ACTIVITIES IN PROJECT SCHEDULE AND SHOW INTERVALS FOR PERFORMANCE OF WORK FOR WHICH CONTRACTOR IS RESPONSIBLE AND INTERVALS FOR WORK PERFORMED BY STARBUCKS CXA. CONTRACTOR SHALL SHOW RESOURCES FOR PERFORMING ALL WORK RELATED TO COMMISSIONING ACTIVITIES ON A LINE ITEM IN THE SCHEDULE OF VALUES.

   C. CONTRACTOR SHALL INSTALL EQUIPMENT IN ACCORDANCE WITH THE MANUFACTURER'S REQUIREMENTS AND ALL CONTRACT DOCUMENTS. ENSURE THAT ALL EQUIPMENT IS INSTALLED TOTALLY COMPLETE, AND ACCESSIBLE TO STARBUCKS CXA FOR INSTALLATION VERIFICATION AND FUNCTIONAL PERFORMANCE TESTING PRIOR TO THE SCHEDULED START OF INSTALLATION VERIFICATION.

   D. INSTALLATION VERIFICATION SHALL BE PERFORMED BY STARBUCKS CXA. CONTRACTOR SHALL SUPPORT STARBUCKS CXA INSTALLATION VERIFICATION EFFORTS AS NECESSARY. PROVIDE ALL ACCESS AND EQUIPMENT NECESSARY FOR STARBUCKS STAFF TO VERIFY THAT THE EQUIPMENT IS INSTALLED CORRECTLY.

   E. CONTRACTOR SHALL BE READILY AVAILABLE DURING INSTALLATION VERIFICATION TO CORRECT ANY DEFICIENCIES OR DEFECTS DISCLOSED BY THE INSTALLATION VERIFICATION PROCESS. CORRECTIONS SHALL BE MADE IN A TIMELY MANNER WITHOUT DISRUPTION OF THE CONSTRUCTION SCHEDULE.

   F. ALL HVAC, EXHAUST FAN, AND AIR CURTAIN EQUIPMENT SHALL BE TESTED, ADJUSTED AND BALANCED BY THE CONTRACTOR'S TESTING, ADJUSTING AND BALANCE AGENT(SEE TESTING, ADJUSTING AND BALANCING) AFTER THE SYSTEM IS VERIFIED TO BE COMPLETE AND CORRECT BY STARBUCKS CXA, IN ACCORDANCE WITH THE REQUIREMENTS OF THESE DOCUMENTS. ALL HVAC CONTROL SYSTEMS SHALL BE TESTED TO ENSURE THAT CONTROL DEVICES, COMPONENTS, EQUIPMENT AND SYSTEMS ARE CALIBRATED, ADJUSTED AND OPERATE IN ACCORDANCE WITH THESE PLANS AND PROJECT MANUAL. SEQUENCES OF OPERATION SHALL BE TESTED TO ENSURE THAT THEY OPERATE IN ACCORDANCE WITH THE CONTRACT REQUIREMENTS. DELIVERABLES: PRELIMINARY, WRITTEN TESTING AND AIR BALANCE REPORT CONFORMING TO THE REQUIREMENTS SPECIFIED HEREIN, DOCUMENTING THE INFORMATION SPECIFIED, ETC. TO THE STARBUCKS CXA IMMEDIATELY UPON COMPLETION OF THE WORK.

   G. CONTRACTOR SHALL INFORM STARBUCKS CXA WHEN EQUIPMENT IS READY FOR FUNCTIONAL PERFORMANCE TESTING. ALL EQUIPMENT SHALL BE READY FOR FUNCTIONAL PERFORMANCE TESTING PRIOR TO STARTING TESTING. CONTRACTOR SHALL OPERATE EQUIPMENT FOR STARBUCKS CXA AND VERIFY BY DEMONSTRATION THE CORRECT OPERATION OF EQUIPMENT, RESPONSE OF SENSORS, AND PROPER EXECUTION OF HVAC CONTROL AND LIGHTING SEQUENCES; INCLUDING BUT NOT LIMITED TO, AIR MOVEMENT, TEMPERATURE, SOUND, AND CONTROL RESPONSE. PROVIDE ANY SECURITY ACCESS, HARDWARE, SOFTWARE, OR OTHER SUPPORT AS NEEDED FOR THE STARBUCKS CXA TO EFFICIENTLY WITNESS AND DOCUMENT ALL EQUIPMENT TESTING. STARBUCKS CXA WILL RECORD THE EQUIPMENT OPERATION AND RESPONSE TO TESTING SEQUENCES AND PREPARE A LIST OF ANY DEFICIENCIES DISCLOSED BY THE FUNCTIONAL PERFORMANCE TESTS FOR CORRECTION BY THE CONTRACTOR. EQUIPMENT INCLUDES, BUT IS NOT LIMITED TO, AIR HANDLING UNITS, ROOFTOP AND SPLIT TYPE, CONDENSING UNITS, EXHAUST FANS, LIGHTING CONTROLS, ETC. DELIVERABLES: PROVIDE COMPLETED COPIES OF ALL START UP REPORTS, FILLED OUT ON THE MANUFACTURER'S FORMS, TO THE STARBUCKS CXA.

   H. CONTRACTOR IS RESPONSIBLE FOR CORRECTING ANY ISSUES OR DEFICIENCIES DISCLOSED DURING THE FUNCTIONAL PERFORMANCE TESTING PROCESS. CORRECTIONS SHOULD BE MADE IN A TIMELY MANNER WITHOUT DISRUPTION TO THE SYSTEM AND CONSTRUCTION SCHEDULE.

   I. CONTRACTOR SHALL BE READILY AVAILABLE FOR ANY RE-TESTING OF EQUIPMENT DEEMED NECESSARY BY STARBUCKS CXA DURING INSTALLATION VERIFICATION AND FUNCTIONAL PERFORMANCE TESTING. CONTRACTOR IS RESPONSIBLE FOR CORRECTING ANY ISSUES OR DEFICIENCIES FOUND IN THE SYSTEM DURING ANY AND ALL RE-TESTING. CORRECTIONS SHOULD BE MADE IN A TIMELY MANNER WITHOUT DISRUPTION TO THE SYSTEM AND CONSTRUCTION SCHEDULE. DELIVERABLES: FINAL BALANCE REPORT, DEFICIENCIES LIST NOTING CORRECTIVE ACTIONS PERFORMED BY CONTRACTOR IN RESPONSE TO INSTALLATION VERIFICATION AND FUNCTIONAL PERFORMANCE TEST RESULTS.

   J. CONSTRUCTION AND POST CONSTRUCTION TESTING: ADDITIONAL TESTING MAY BE REQUIRED AND OTHER PROCESSES THAT MAY OCCUR OUT OF SEQUENCE WITH COMMISSIONING SERVICE. CONTRACTOR SHALL CONDUCT, DOCUMENT, SUPPORT AND SCHEDULE THIS TESTING AS DIRECTED BY STARBUCKS CXA.

EGRESS LIGHTING NOTES

A. EXIT SIGNS SHALL BE INTERNALLY OR EXTERNALLY ILLUMINATED INTERNALLY ILLUMINATED EXIT SIGNS SHALL BE LISTED AND LABELED IN ACCORDANCE WITH UL 924 AND SHALL BE INSTALLED IN ACCORDANCE WITH THE MANUFACTURER'S INSTRUCTIONS AND CHAPTER 27. EXTERNALLY ILLUMINATED EXIT SIGNS SHALL COMPLY WITH THE GRAPHICS AND POWER SOURCE REQUIREMENTS IN SECTIONS 101.6.1 AND 1011.6.3 RESPECTIVELY. WHEN THE FACE OF AN EXIT SIGN IS ILLUMINATED FROM AN EXTERNAL SOURCE, IT SHALL HAVE AN INTENSITY OF NOT LESS THAN 5 FOOT CANDLES (54 LUX). (1011.3)

B. ANYTIME A BUILDING OR A PORTION OF A BUILDING IS OCCUPIED, THE MEANS OF EGRESS SERVING THE OCCUPIED PORTION SHALL BE ILLUMINATED AT AN INTENSITY OF NOT LESS THAN 1 FOOT CANDLE (11 LUX) AT THE WALKING SURFACE LEVEL. (1006)

C. THE POWER SUPPLY FOR MEANS OF EGRESS ILLUMINATION SHALL BE PROVIDED BY THE PREMISE'S ELECTRICAL SUPPLY, IN THE EVENT OF POWER SUPPLY FAILURE, ILLUMINATION SHALL BE AUTOMATICALLY PROVIDED FROM AN EMERGENCY SYSTEM FOR THE FOLLOWING AREAS. (1006.3):

   1) AISLES AND UNENCLOSED EGRESS STAIRWAYS IN ROOMS AND SPACES THAT REQUIRE TWO OR MORE MEANS OF EGRESS.

   2) CORRIDORS, INTERIOR EXIT STAIRWAYS & RAMPS AND EXIT PASSAGEWAYS IN BUILDINGS REQUIRED TO HAVE TWO OR MORE EXITS.

   3) EXTERIOR EGRESS COMPONENTS AT OTHER THAN THE LEVEL OF EXIT DISCHARGE UNTIL EXIT DISCHARGE IS ACCOMPLISHED FOR BUILDINGS REQUIRED TO HAVE TWO OR MORE EXITS.

   4) INTERIOR EXIT DISCHARGE ELEMENTS, AS PERMITTED IN SECTION 1027.1 IN BUILDINGS REQUIRED TO HAVE TWO OR MORE EXITS.

   5) EXTERIOR LANDINGS, AS REQUIRED BY SECTION 1008.1.6 EXIT DISCHARGE DOORWAYS IN BUILDING REQUIRED TO HAVE TWO OR MORE EXITS.

D. THE EMERGENCY POWER SYSTEM SHALL ALSO BE CONNECTED TO AN EMERGENCY ELECTRICAL SYSTEM WHICH IS TO PROVIDE CONTINUED ILLUMINATION FOR A DURATION OF NOT LESS THAN 1 1/2 HOUR IN CASE OF PRIMARY POWER LOSS. CONTINUED ILLUMINATION IS TO BE PROVIDED FROM STORAGE BATTERIES, UNIT EQUIPMENT OR AN ON-SITE GENERATOR AND THE INSTALLATION OF THE EMERGENCY POWER SYSTEM SHALL BE INSTALLED IN ACCORDANCE WITH CHAPTER 27. (1006.3)

E. EMERGENCY LIGHTING FACILITIES SHALL BE ARRANGED TO PROVIDE INITIAL ILLUMINATION THAT IS AT LEAST AN AVERAGE OF 1 FOOT CANDLE (11 LUX) AND A MINIMUM AT ANY POINT OF 0.1 FOOT CANDLE (1 LUX) MEASURED ALONG THE PATH OF EGRESS AT FLOOR LEVEL. A MAXIMUM TO MINIMUM ILLUMINATION UNIFORMITY RATION OF 40:1 SHALL NOT BE EXCEEDED. (1008.1.9.3)

KLH ENGINEERS

MECHANICAL/ELECTRICAL ENGINEERS

WWW.KLHENGRS.COM

KOHRS LONNEMANN HEIL ENGINEERS, INC.

444 SOUTH FRONT STREET
COLUMBUS, OHIO 43215
800-354-9783 614-228-2180
614-228-2183 FAX

FORT THOMAS, KENTUCKY
LEXINGTON, KENTUCKY
LOUISVILLE, KENTUCKY
NEW YORK, NEW YORK

PERMIT SET - FOR CONSTRUCTION

© 2022 STARBUCKS COFFEE COMPANY

STARBUCKS COFFEE COMPANY
2401 UTAH AVENUE SOUTH
SEATTLE, WASHINGTON 98134
(206) 318-1575

THESE DRAWINGS AND PROJECT MANUAL ARE CONFIDENTIAL AND SHALL REMAIN THE SOLE PROPERTY OF STARBUCKS CORPORATION, WHICH IS THE OWNER OF THE COPYRIGHT IN THIS WORK. THEY SHALL NOT BE REPRODUCED (IN WHOLE OR IN PART), SHARED WITH THIRD PARTIES OR USED IN ANY MANNER ON OTHER PROJECTS OR EXTENSIONS TO THIS PROJECT WITHOUT THE PRIOR WRITTEN CONSENT OF STARBUCKS CORPORATION. THESE DRAWINGS AND SPECIFICATIONS ARE INTENDED TO EXPRESS DESIGN INTENT FOR A PROTOTYPICAL STARBUCKS STORE (WHICH IS SUBJECT TO CHANGE AT ANYTIME) AND DO NOT REFLECT ACTUAL SITE CONDITIONS. NEITHER PARTY SHALL HAVE ANY OBLIGATION NOR LIABILITY TO THE OTHER (EXCEPT STATED ABOVE) UNTIL A WRITTEN AGREEMENT IS FULLY EXECUTED BY BOTH PARTIES.

STARBUCKS TEMPLATE VERSION i2022.10.23

Gensler

MAIN OFFICE
M. ARTHUR GENSLER JR. & ASSOCIATES
FL QUALIFIER'S LIC. NO. AR96486
45 FREMONT ST, SUITE 1500
SAN FRANCISCO, CA 94105 USA
Tel (415) 433.3700
Fax (415) 836.4599

SATELLITE OFFICE
10 NORTH PARK PLACE
SUITE 400
MORRISTOWN, NJ 07960 USA
Tel (973) 290.8500

PROJECT NAME:
ST LUCIE WEST & SW
CASHEMERE BLVD

PROJECT ADDRESS:
920 SW SAINT LUCIE BLVD,
PORT ST.LUCIE, FL 34986

STORE #:	81616
PROJECT #:	101357-001
ISSUE DATE:	06-27-2025
STORE DESIGNER:	ASHLEY SUEIRAS
DESIGN MANAGER:	GENSLER
ENGINEER OF RECORD:	KLH ENGINEERS

Revision Schedule

Rev	Date	By	Description

SHEET TITLE:
ELECTRICAL NOTES

SCALE: AS SHOWN

SHEET NUMBER:
E002

COM*check* Software Version COMcheckWeb

Interior Lighting Compliance Certificate

Project Information

Energy Code: 90.1 (2019) Standard
Project Title: 27472.00 - Starbucks - Tenant Improvement - Port Street, St. Lucie, FL
Project Type: New Construction

Construction Site:
920 SW SAINT LUCIE BLVD
PORT STLUCIE, FL 34986

Owner/Agent:

Designer/Contractor:
KLH Engineers
1538 Alexandria Pike
Fort Thomas, KY 41075

Allowed Interior Lighting Power

A Area Category	B Floor Area (ft2)	C Allowed Watts / ft2	D Allowed Watts
1-RR (Common Space Types:Restrooms)	56	0.63	35
2-RR VESTIBULE (Common Space Types:Corridor/Transition <8 ft wide)	48	0.41	20
3-RR (Common Space Types:Restrooms)	61	0.63	38
4-BOH (Common Space Types:Food Preparation)	548	1.09	597
5-ENGINE (Common Space Types:Food Preparation)	548	1.09	597
Allowance: Decorative Appearance / Fix. ID: tape driver	500 (a)	0.75	375 (b)
6-CAFE (Common Space Types:Dining Area - Bar Lounge/Leisure)	745	0.86	641
Allowance: Other retail highlighting / Fix. ID: 21771	300 (a)	0.45	84 (b)
Allowance: Decorative Appearance / Fix. ID: 20661	200 (a)	0.75	90 (b)
7-OFFICE (Common Space Types:Office - Enclosed <=250 sq ft)	134	0.74	99
		Total Allowed Watts =	2577

(a) Area claimed must not exceed the illuminated area permitted for this allowance type.
(b) Allowance is (B x C) or the actual wattage of the fixtures given in Section 2, whichever is less.

Proposed Interior Lighting Power

A Fixture ID : Description / Lamp / Wattage Per Lamp / Ballast	B Lamps/ Fixture	C # of Fixture	D Fixture Watt.	E (C X D)
1-RR (Common Space Types:Restrooms)				
LED: 21773: Other:	1	4	12	48
LED: 20791: Other:	1	1	25	25
2-RR VESTIBULE (Common Space Types:Corridor/Transition <8 ft wide)				
LED: 21771: Other:	1	4	12	48
3-RR (Common Space Types:Restrooms)				
LED: 20791: Other:	1	1	25	25
LED: 21773: Other:	1	4	12	48
4-BOH (Common Space Types:Food Preparation)				
LED: 23055: Other:	1	7	36	252
5-ENGINE (Common Space Types:Food Preparation)				
LED: 21771: Other:	1	26	12	312
LED: x0601: Other:	1	4	12	48

A Fixture ID : Description / Lamp / Wattage Per Lamp / Ballast	B Lamps/ Fixture	C # of Fixture	D Fixture Watt.	E (C X D)
LED: tape driver: Other:	1	5	96	480
6-CAFE (Common Space Types:Dining Area - Bar Lounge/Leisure)				
LED: 21771: Other:	1	7	12	84
Track Lighting: Wattage based on current limiting device capacity	0	0	720	720
LED: 20661: Other:	1	3	30	90
7-OFFICE (Common Space Types:Office - Enclosed <=250 sq ft)				
LED: 21773: Other:	1	1	12	12
Track Lighting: Wattage based on current limiting device capacity	0	0	180	180
			Total Proposed Watts =	2372

Interior Lighting PASSES: Design 8% better than code

Interior Lighting Compliance Statement

Compliance Statement: The proposed interior lighting design represented in this document is consistent with the building plans, specifications, and other calculations submitted with this permit application. The proposed interior lighting systems have been designed to meet the 90.1 (2019) Standard requirements in COM*check* Version COMcheckWeb and to comply with any applicable mandatory requirements listed in the Inspection Checklist.

Name - Title Signature Date

COM*check* Software Version COMcheckWeb

Inspection Checklist

Energy Code: 90.1 (2019) Standard

Requirements: 100.0% were addressed directly in the COM*check* software

Text in the "Comments/Assumptions" column is provided by the user in the COMcheck Requirements screen. For each requirement, the user certifies that a code requirement will be met and how that is documented, or that an exception is being claimed. Where compliance is itemized in a separate table, a reference to that table is provided.

Section # & Req.ID	Plan Review	Complies?	Comments/Assumptions
4.2.2, 8.4.1.1, 8.4.1.2, 8.7 [PR6][2]	Plans, specifications, and/or calculations provide all information with which compliance can be determined for the electrical systems and equipment and document where exceptions are claimed. Feeder connectors sized in accordance with approved plans and branch circuits sized for maximum drop of 3%.	☐Complies ☐Does Not ☐Not Observable ☐Not Applicable	Requirement will be met.
4.2.2, 9.4.3, 9.7 [PR4][1]	Plans, specifications, and/or calculations provide all information with which compliance can be determined for the interior lighting and electrical systems and equipment and document where exceptions to the standard are claimed. Information provided should include interior lighting power calculations, wattage of bulbs and ballasts, transformers and control devices.	☐Complies ☐Does Not ☐Not Observable ☐Not Applicable	Requirement will be met.

Additional Comments/Assumptions:

1	High Impact (Tier 1)	2	Medium Impact (Tier 2)	3	Low Impact (Tier 3)

Section # & Req.ID	Rough-In Electrical Inspection	Complies?	Comments/Assumptions
8.4.2 [EL10][2]	At least 50% of all 125 volt 15- and 20-Amp receptacles are controlled by an automatic control device.	☐Complies ☐Does Not ☐Not Observable ☐Not Applicable	**Exception:** Requirement does not apply.
8.4.3 [EL11][2]	New buildings have electrical energy use measurement devices installed. Where tenant spaces exist, each tenant is monitored separately. In buildings with a digital control system the energy use is transmitted to to control system and displayed graphically.	☐Complies ☐Does Not ☐Not Observable ☐Not Applicable	**Exception:** Buildings 25,000 ft2.
9.4.1.1 [EL1][2]	Automatic control requirements prescribed in Table 9.6.1, for the appropriate space type, are installed. Mandatory lighting controls (labeled as 'REQ') and optional choice controls (labeled as 'ADD1' and 'ADD2') are implemented.	☐Complies ☐Does Not ☐Not Observable ☐Not Applicable	Requirement will be met.
9.4.1.1 [EL2][2]	Independent lighting controls installed per approved lighting plans and all manual controls readily accessible and visible to occupants.	☐Complies ☐Does Not ☐Not Observable ☐Not Applicable	Requirement will be met.
9.4.1.1f [EL13][1]	Daylight areas under skylights and roof monitors that have more than 150 W combined input power for general lighting are controlled by photocontrols.	☐Complies ☐Does Not ☐Not Observable ☐Not Applicable	**Exception:** Requirement does not apply.
9.4.1.3 [EL4][1]	Separate lighting control devices for specific uses installed per approved lighting plans.	☐Complies ☐Does Not ☐Not Observable ☐Not Applicable	Requirement will be met.
9.6.2 [EL8][1]	Additional interior lighting power allowed for special functions per the approved lighting plans and is automatically controlled and separated from general lighting.	☐Complies ☐Does Not ☐Not Observable ☐Not Applicable	Requirement will be met.

Additional Comments/Assumptions:

1	High Impact (Tier 1)	2	Medium Impact (Tier 2)	3	Low Impact (Tier 3)

Section # & Req.ID	Final Inspection	Complies?	Comments/Assumptions
8.7.1 [FI16][1]	Furnished as-built drawings for electric power systems within 30 days of system acceptance.	☐Complies ☐Does Not ☐Not Observable ☐Not Applicable	Requirement will be met.
8.7.2 [FI17][1]	Furnished O&M instructions for systems and equipment to the building owner or designated representative.	☐Complies ☐Does Not ☐Not Observable ☐Not Applicable	Requirement will be met.
9.2.2.3 [FI18][1]	Interior installed lamp and fixture lighting power is consistent with what is shown on the approved lighting plans, demonstrating proposed watts are less than or equal to allowed watts.	☐Complies ☐Does Not ☐Not Observable ☐Not Applicable	*See the Interior Lighting fixture schedule for values.*
9.4.4 [FI20][1]	At least 75% of all permanently installed lighting fixtures in dwelling units have >= 55 lm/W efficacy or a >= 45 lm/W total luminaire efficacy.	☐Complies ☐Does Not ☐Not Observable ☐Not Applicable	**Exception:** Requirement does not apply.

Additional Comments/Assumptions:

1	High Impact (Tier 1)	2	Medium Impact (Tier 2)	3	Low Impact (Tier 3)

KLH ENGINEERS
MECHANICAL/ELECTRICAL ENGINEERS
WWW.KLHENGRS.COM
KOHRS LONNEMANN HEIL ENGINEERS, INC.
444 SOUTH FRONT STREET
COLUMBUS, OHIO 43215
800-354-9783 614-228-2180
614-228-2183 FAX
FORT THOMAS, KENTUCKY
LEXINGTON, KENTUCKY
LOUISVILLE, KENTUCKY
NEW YORK, NEW YORK

PERMIT SET - FOR CONSTRUCTION

© 2022 STARBUCKS COFFEE COMPANY

STARBUCKS COFFEE COMPANY
2401 UTAH AVENUE SOUTH
SEATTLE, WASHINGTON 98134
(206) 318-1575

THESE DRAWINGS AND PROJECT MANUAL ARE CONFIDENTIAL AND SHALL REMAIN THE SOLE PROPERTY OF STARBUCKS CORPORATION, WHICH IS THE OWNER OF THE COPYRIGHT IN THIS WORK. THEY SHALL NOT BE REPRODUCED (IN WHOLE OR IN PART), SHARED WITH THIRD PARTIES OR USED IN ANY MANNER ON OTHER PROJECTS OR EXTENSIONS TO THIS PROJECT WITHOUT THE PRIOR WRITTEN CONSENT OF STARBUCKS CORPORATION. THESE DRAWINGS AND SPECIFICATIONS ARE INTENDED TO EXPRESS DESIGN INTENT FOR A PROTOTYPICAL STARBUCKS STORE (WHICH IS SUBJECT TO CHANGE AT ANYTIME) AND DO NOT REFLECT ACTUAL SITE CONDITIONS. NEITHER PARTY SHALL HAVE ANY OBLIGATION NOR LIABILITY TO THE OTHER (EXCEPT STATED ABOVE) UNTIL A WRITTEN AGREEMENT IS FULLY EXECUTED BY BOTH PARTIES.

STARBUCKS TEMPLATE VERSION i2022.10.23

Gensler
MAIN OFFICE
M. ARTHUR GENSLER JR. & ASSOCIATES
FL QUALIFIER'S LIC. NO. AR96486
45 FREMONT ST, SUITE 1500
SAN FRANCISCO, CA 94105 USA
Tel (415) 433.3700
Fax (415) 836.4599
SATELLITE OFFICE
10 NORTH PARK PLACE
SUITE 400
MORRISTOWN, NJ 07960 USA
Tel (973) 290.8500

PROJECT NAME:
ST LUCIE WEST & SW CASHEMERE BLVD

PROJECT ADDRESS:
920 SW SAINT LUCIE BLVD,
PORT ST.LUCIE, FL 34986

STORE #: 81616
PROJECT #: 101357-001
ISSUE DATE: 06-27-2025
STORE DESIGNER: ASHLEY SUEIRAS
DESIGN MANAGER: GENSLER
ENGINEER OF RECORD: KLH ENGINEERS

Revision Schedule

Rev	Date	By	Description

SHEET TITLE:
ENERGY CODE CALCULATIONS
SCALE: AS SHOWN

SHEET NUMBER:
E003

9/4/2025 2:17:05 PM C:\Users\lheil\Documents\Revit\27472.00-23-MEP-SBX- Port St, St. Lucie, FL_lheil.rvt

KEYED NOTES

ES1	(1) 1" CONDUIT FOR EACH DIRECTIONAL SIGN TO ELECTRICAL PANELS IN BOH.
ES2	(1) 1" CONDUIT FROM MENU BOARD TO ELECTRICAL PANELS IN BOH.
ES3	(1) 1" CONDUIT FROM PRE-ORDER MENU BOARD TO ELECTRICAL PANELS IN BOH.
ES4	(1) 1" CONDUIT FROM DIGITAL ORDER SCREEN TO ELECTRICAL PANELS IN BOH.
ES5	(2) 2" CONDUIT FROM DIGITAL ORDER SCREEN TO INTERIOR OF DRIVE THRU "BUMP OUT".
ES6	(1) 1" CONDUIT EMBED IN DRIVE THRU LANE FOR VEHICLE DETECTOR LOOP. CENTER CONDUIT ON DIGITAL ORDER SCREEN POST.
ES7	(1) 1" CONDUIT EMBED IN DRIVE THRU LANE FOR VEHICLE DETECTOR LOOP. CENTER CONDUIT ON DRIVE THRU BUMP OUT.
ES8	(1) 1" CONDUIT FOR RECEPTACLE POWER AT BOLLARDS

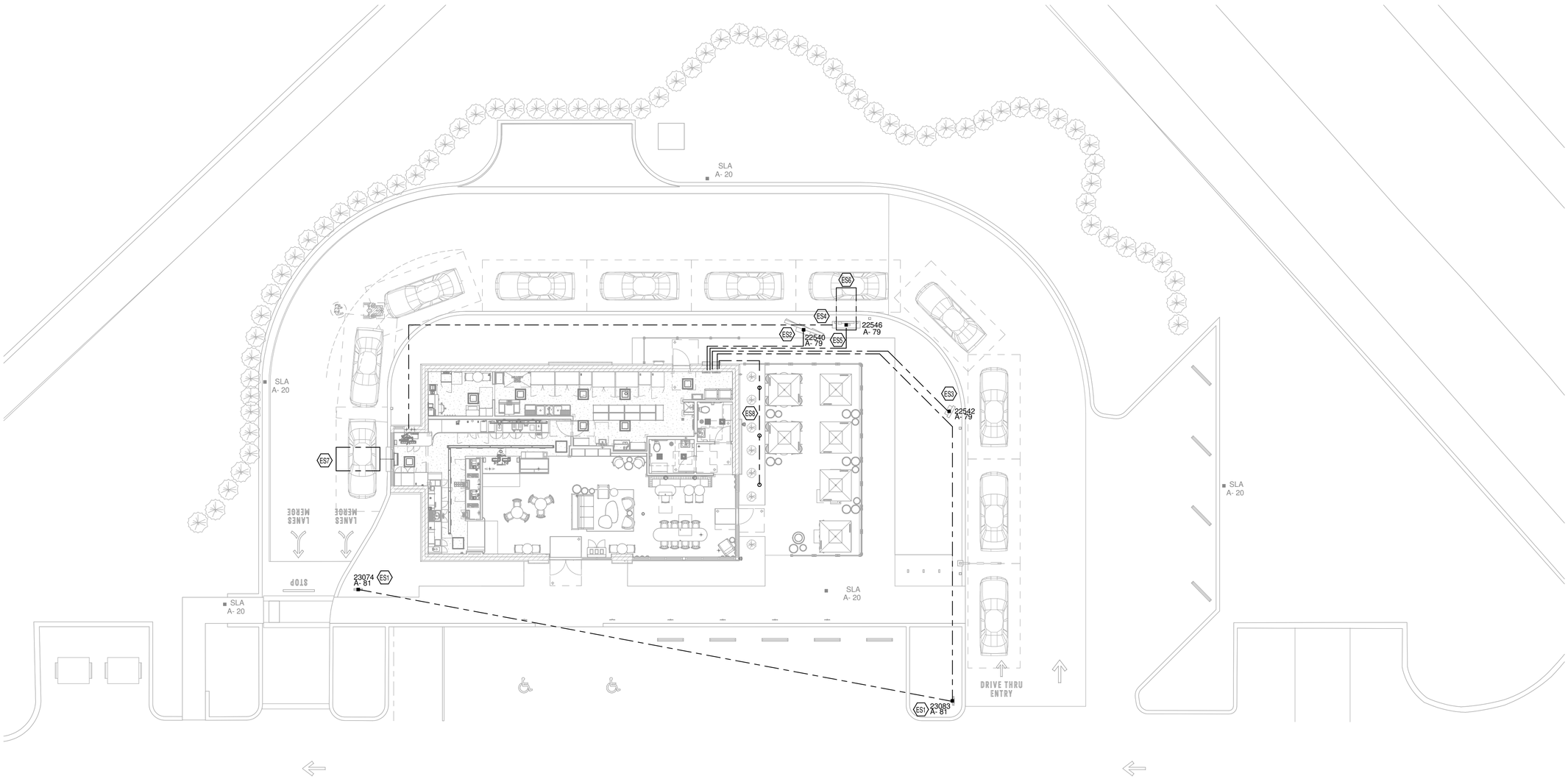

1 ELECTRIC SITE PLAN
3/32" = 1'-0"

KLH ENGINEERS
MECHANICAL/ELECTRICAL ENGINEERS
WWW.KLHENGRS.COM
KOHRS LONNEMANN HEIL ENGINEERS, INC.
444 SOUTH FRONT STREET
COLUMBUS, OHIO 43215
800-354-9783 614-228-2180
614-228-2183 FAX
FORT THOMAS, KENTUCKY
LEXINGTON, KENTUCKY
LOUISVILLE, KENTUCKY
NEW YORK, NEW YORK

PERMIT SET - FOR CONSTRUCTION

© 2022 STARBUCKS COFFEE COMPANY

STARBUCKS COFFEE COMPANY
2401 UTAH AVENUE SOUTH
SEATTLE, WASHINGTON 98134
(206) 318-1575

THESE DRAWINGS AND PROJECT MANUAL ARE CONFIDENTIAL AND SHALL REMAIN THE SOLE PROPERTY OF STARBUCKS CORPORATION, WHICH IS THE OWNER OF THE COPYRIGHT IN THIS WORK. THEY SHALL NOT BE REPRODUCED (IN WHOLE OR IN PART), SHARED WITH THIRD PARTIES OR USED IN ANY MANNER ON OTHER PROJECTS OR EXTENSIONS TO THIS PROJECT WITHOUT THE PRIOR WRITTEN CONSENT OF STARBUCKS CORPORATION. THESE DRAWINGS AND SPECIFICATIONS ARE INTENDED TO EXPRESS DESIGN INTENT FOR A PROTOTYPICAL STARBUCKS STORE (WHICH IS SUBJECT TO CHANGE AT ANYTIME) AND DO NOT REFLECT ACTUAL SITE CONDITIONS. NEITHER PARTY SHALL HAVE ANY OBLIGATION NOR LIABILITY TO THE OTHER (EXCEPT STATED ABOVE) UNTIL A WRITTEN AGREEMENT IS FULLY EXECUTED BY BOTH PARTIES.

STARBUCKS TEMPLATE VERSION |2022.10.23

Gensler
MAIN OFFICE
M. ARTHUR GENSLER JR. & ASSOCIATES
FL QUALIFIER'S LIC. NO. AR96486
45 FREMONT ST., SUITE 1500
SAN FRANCISCO, CA 94105 USA
Tel (415) 433.3700
Fax (415) 836.4599
SATELLITE OFFICE
10 NORTH PARK PLACE
SUITE 400
MORRISTOWN, NJ 07960 USA
Tel (973) 290.8500

PROJECT NAME:
ST LUCIE WEST & SW CASHEMERE BLVD

PROJECT ADDRESS:
920 SW SAINT LUCIE BLVD,
PORT ST.LUCIE, FL 34986

STORE #:	81616
PROJECT #:	101357-001
ISSUE DATE:	06-27-2025
STORE DESIGNER:	ASHLEY SUEIRAS
DESIGN MANAGER:	GENSLER
ENGINEER OF RECORD:	KLH ENGINEERS

Revision Schedule

Rev	Date	By	Description

SHEET TITLE:
ELECTRICAL SITE PLAN

SCALE: AS SHOWN

SHEET NUMBER:
E004

9/4/2025 2:17:18 PM C:\Users\lheil\Documents\Revit\27472.00-23-MEP-SBX- Port St. St. Lucie, FL_lheil.rvt

26 05 01.00 - COMMON WORK RESULTS FOR ELECTRIC

The General Provisions of the Contract including the General and Supplemental Conditions and General Requirements apply to the work in this section. Before submitting a bid, examine documents of all other trades, visit the site and get acquainted with all conditions that may in any way affect the execution of this contract. Take measurements and be responsible for exact size and locations of all openings required for the installation of work. Noted dimensions convey desired locations for devices. Coordinate with owner representative on site prior to deviating from noted dimensions for any reason. Where detailed method of installation is not indicated or where variations exist between described work and approved practice, direction of the Owners representative on job site shall be followed.

Whenever the words "contractor", "this contractor", etc. appear on drawings or in these specifications for the Electrical Work, it shall refer to the Electrical Sub-Contractor. Whenever the word "Provide" appears in these documents, it shall be interpreted to mean "Furnish and Install". Whenever the word "Relocate" appears in these documents, it shall be interpreted to disconnect electrical feed, make safe including lock out, store and protect device, reinstall, rework and extend conduit and wire to new location, re-energize and test.

The exact mounting height of devices shall be determined in the field with relation to architectural details and equipment being served. It shall be the responsibility of this contractor to coordinate outlet location with equipment. The Owners representative shall be permitted to relocate any outlet prior to installation within a 15 foot limit at no additional charge in contract price. All fasteners, hangers and methods of hanging exposed work in finished areas shall be submitted to the Owners representative for approval before installation.

The contract includes all items of material and labor required for the complete installation and full operation of the electrical work as shown on the drawings and hereinafter specified. All materials and methods shall be in accordance with applicable codes, regulations and/or ordinances and meet the approval of local inspection authority having jurisdiction. The latest edition of NFPA 70 (NEC/National Electrical Code) shall be the minimum requirement for all work. Examine the drawings and specifications for compliance with the above codes, regulations and ordinances and base bid and work accordingly. Obtain and pay for all permits and inspections related to this work. A certificate of approval for work from inspection authority shall be given to the Owner before final acceptance will be given by Owners representative.

All work, materials, and equipment shall have a one-year warranty after acceptance of the work by the Owner. Any defective items shall be removed and replaced at the electrical sub-contractor's expense and to the satisfaction of the engineer and owner's representative.

Perform work under this contract in close harmony with other contractors so completed work shall present a neat and workmanlike installation. Exposed finished materials and equipment shall be carefully cleaned and wiped to remove grease, smudges, fingerprints, dust and other spots and left smooth and clean. During the progress of the work, the electrical sub-contractor shall carefully clean the job site and shall leave the premises and all portions of the building in which he is working free of debris and in a clean and safe condition.

This contractor shall be responsible for the training of owner's representatives of each system to the satisfaction of the Owners representative.

The Electrical Contractor shall consult the Plumbing, HVAC and Structural plans (where applicable) in all instances before installing his work so that his work will not interfere with those branches. In the event of a conflict, this contractor shall report to the Owners representative at once and do no further work to be installed until a satisfactory arrangement is decided upon. Any work done, or equipment placed in position by this contractor, creating a conflict in violation hereof, shall be readjusted to the satisfaction of the Owner's representative at the expense of the contractor. The decision of the Owners representative shall be final in regard to changes due to conflicting conditions. Contractor shall complete his work or any part thereof at such time as may be designated by the Owner, so that it can be used for temporary or permanent use and such use of the system shall not be construed as an acceptance of same by Owner.

Obtain the latest Owner's Design and Construction Standards document(s). Comply with all Owner-specific requirements in addition to requirements set forth in these specifications and accompanying drawings. Should there be a conflict, the Owner's standards shall take precedence, unless prevailing codes and regulations mandate otherwise.

Two sets of electrical drawings shall be provided as record drawings which shall be separate, clean, copies reserved for the purpose of showing a complete picture of the work as actually installed. These drawings shall also serve as work progress report sheets and the electrical contractor shall make any notations, neat and legible thereon daily as work proceeds. The drawings shall be available for inspection at all times and shall be kept at the job at a location designated by the Owners representative. At the completion of the work, these record drawings shall be signed by the electrical contractor, dated and returned to the Owners representative. Final payment of contract will not be made until receipt and review of said drawings.

Provide two neatly bound (with tabbed sections) copies of maintenance books, instruction books and parts list pertaining to all equipment furnished. Submit to the Owners representative for approval. Final payment will not be made until drawings for record, maintenance and instruction manuals are delivered to the Owners representative.

26 05 02.00 - COMMON ELECTRICAL MATERIALS AND METHODS

All materials and equipment shall be new. All materials, apparatus and equipment shall bear the seal of Underwriters Laboratories Inc. (UL), or a similar credible testing agency, label where regularly supplied. Certain manufacturers of material and equipment are specified and plans are detailed according to this material. This contractor shall base his bid on furnishing and installing this make of material and equipment.

Where more than one make of material or equipment is specified, the contractor shall state in his bid which make he proposes to furnish. Shop drawings shall be submitted on material and equipment to be furnished by the contractor for Engineers approval. This approval to be obtained prior to shipment of equipment.

Hold routing of new raceways in new and existing buildings as tightly as possible to the structure above. Obtain approval of owner's representative prior to installation. Do not install any electrical work within 6 inches of roof decking.

Neatly dress all work. Install all work parallel and perpendicular to surfaces or exposed structural members, and follow surface contours, where possible. Install splice and tap connectors which possess equivalent or better mechanical strength and insulation rating than conductors being spliced. Use splice and tap connectors which are compatible with conductor material. All wires shall be run continuous from outlet to outlet/luminaire to luminaire. Insulation value of joints shall be 100% in excess of wire. Provide adequate length of conductors within electrical enclosures and train the conductors to terminal points with no excess. Bundle multiple conductors, with conductors no larger than 10 AWG cabled in individual circuits. Make terminations so there is no bare conductor at the terminal.

Maintain a uniform elevation for all cable runs wherever possible. All cables shall be supported/anchored at maximum 4 foot intervals and within 12" of box or outlet and shall not sag. Install cables in a manner that prevents overheating. Cables shall be fastened directly to the structure using factory clamps/clips specifically designed for the respective cable (Caddy or equal).

Keep conductor splices to minimum. Pull conductors simultaneously where more than one is being installed in same raceway. Use UL listed pulling compound or lubricant, where necessary. Increase wire sizes to offset voltage drop as/if required.

Branch subfeeder circuits shall be installed as shown on the floor plans. Where outlets are indicated by letters on plans, they shall be controlled by corresponding switches.

Outlets shall be located approximately as shown on the plans and shall be wired to provide control of outlets indicated. All wires of any one circuit shall be run in the same conduit.

Mechanical wire spliceres shall be Scotchlock insulated type, TandB Stakon or approved equal. The conductors terminating at each wired outlet shall be left not less than 8" long at their outlet fittings to facilitate installment of devices or luminaires. Friction and rubber tape conform to Federal Specifications HH-T-11 and HH-T-111. Plastic electrical tape shall be Scotch #33+ or approved equal.

Do not share neutrals when amongst multiple branch circuits or with multi-wire branch circuits.

Provide grounding electrode conductors for service entrances and derived systems.

Provide all feeders and branch circuits with insulated (green covering) equipment grounding.

Only install conduit exposed on rooftops when it is impossible to do otherwise, or only if specifically indicated for such installation case-by-case elsewhere in documents. Installation convenience, financial considerations, lack of coordination with other trades and similar rationale are not sufficient reasons for doing so. In cases where conduits must be installed on rooftops, de-rate conductors and modify conduit sizes as needed to accommodate this condition. Provide expansion fittings, which are UL listed and labeled for the respective applications, at all building expansion joints and at maximum distances of 100 feet. Paint all such conduits with at least two coats of UV-resistant weatherproof paint. Provide white paint on flat rooftops that have finishes white in color, and for otherwise-colored roof finishes that are not visible from the building interior or from the ground outdoors. Elsewhere select colors to match surrounding surfaces; submit colors to Architect for review in advance of procuring paint.

Provide all cutting and patching required for the admission of work. Any damage done by this contractor to the building during the progress of work shall be made good at contractor's own expense. All patching shall be done by a skilled craftsman in that respective trade. It shall be the responsibility of this contractor to supervise the installation of, and pay for all additional members, wood or metal and labor which may be required to support any type of permanent or temporary electrical apparatus employed in the execution of this contractor's work.

Access Doors: Do not use access doors unless special prior written permission is granted from the Owner's Representative. Install pull boxes, junction boxes, etc. in areas which are accessible after completion of construction. Do not install pull boxes or junction boxes above gypsum board or similar inaccessible ceiling systems. Where there is no other recourse but to provide an access door/panel, and where approval of Owner's Representative has been obtained, provide required access doors/panels as required for a complete code-compliant electrical installation as defined below. Provide access doors in fire/smoke ratings that meet or exceed the surrounding surface that is being penetrated.

Seal all new floor, ceiling, wall, slab, etc. penetrations to match or exceed existing assembly fire ratings. Provide sleeve seals for all sleeves, provide sleeves for all penetrations. All penetrations of fire-rated or smoke-rated wall, floors ceilings, etc. shall be sealed immediately after raceways are installed. All new electrically related work shall be supported directly from building structural members. New electrically related work shall not be supported from ductwork, ductwork hanger, ceiling supports, existing conduit support, etc.

26 05 03.00 - SUBMITTALS FOR ELECTRICAL SYSTEMS

Provide submittals in accordance with the Contract Documents. In addition to Division 01, the Contractor is advised to review and comply with the requirements articulated within each Division and within each section of that Division.

Some Divisions may include a division-specific "Submittal Requirements for …." section. Where this section exists, it articulates additional requirements for submittals that apply to the work of that Division.
The following requirements help to identify, track and keep the project organized for all parties involved. They are necessary to ensure a timely turnaround and an appropriate technical review. Submittals that do not conform to the administrative requirements are rejected and returned, without technical review.

Supply submittals for each section: Submittals shall be supplied on a section-by-section and type-by-type basis. For example, independent product data submittals shall be furnished for each section that requires product data submittals. Independent shop drawing submittals shall be furnished for each section that requires shop drawings. Separate PDF file packages shall be supplied for each section, for each submittal type. Each PDF shall represent a single standalone submittal.

Include a transmittal: Transmittals shall enumerate each submittal for each section of each type and iteration.

Include cover sheet / title page: The cover sheet shall include the information identified in the contract documents. It shall be included as the first page of each electronic and/or hardcopy document-based submittal. An editable and printable PDF form created with editable fields and specification compliant appearance is available from KLH upon request. It is also downloadable from the KLH website at www.klhengrs.com.

Include an index: The index shall enumerate the contents of the submittal.

Include checklists: Where checklists are included with the specifications, complete and include them within the appropriate submittal. Supply complete submittals: Complete submittals of each type are required. Partial submittals will be rejected. Where a section requires a product data submittal, all product data for that section shall be supplied together, at one time, as one complete submittal. When resubmittal is required (e.g. Revise and Resubmit) the revised submittal shall be more complete, more accurate and more contract-compliant than its rejected predecessor. The submittal number (for each section and type) shall increment for each subsequent submittal (00 – Original submission, 01 – First Resubmission, 02 – Second Resubmission, etc…). Resubmittals shall include a copy of the reviewers comments supplied with the prior submittal rejection and shall be amended with a description of the specific action taken to comply with the reviewer's comments. The absence of this on resubmittal is cause for rejection.

Name electronic files to match the submittal ID and cover sheet: The electronic file name of submittals shall match the submittal ID included on the submittals cover page. For example: The original/first product data submittal for Section 260519 would be labeled as "260519.00-PD-00"; the first resubmittal of same shall be labeled "260519.00-PD-01". The original/first shop drawings submittal file for the same section would be labeled "260519.00-SD-00"; the first resubmittal of same shall be labeled "260519.00-SD-01".

If expressly permitted by the Owner and the terms of the Contract, editable electronic drawings may be made available for the creation of shop and as-built drawings upon request. Drawings will be made available at the discretion of the Engineer.

"Request Drawings" form can be accessed, filled out and submitted at http://www.klhengrs.com (right hand side of page - Contractor Resources). Direct access to this form can be found here:
http://files.klhengrs.com/requestdrawings.html

26 05 19.00 - LOW-VOLTAGE ELECTRICAL POWER CONDUCTORS AND CABLES

Submittal Requirements
Product Data
For each type of conductor and cable.

Furnish and install all necessary cable of the size and type indicated on the drawings or specified hereinafter. All wire shall be copper. All wiring shall be new. No wire smaller than #12 AWG shall be installed unless specifically designated. Use of #14 color coded wire will be allowed for control circuits only. Provide stranded conductors for all sizes unless indicated otherwise.

Provide THHN/THWN-2 insulation for all conductors as appropriate for the locations where installed. Provide color coded insulation/jacket for phase identification. All wires shall be rated at 600 volts. Provide type XHHW-2 insulation for all wiring below grade or subject to moisture.

Unless specifically indicated otherwise on drawings, provide grounded ("neutral") conductors that are at least parity-sized with corresponding phase/line conductors for all applications.

All conductors shall be rated for 90 deg. C. minimum. Provide with green insulated equipment ground conductor. Provide compatible steel fittings with integral red plastic insulated throat bushings. Cables shall be 90 deg. C. rated with all components and fittings listed for grounding and compliant with the following: UL Std.4 and UL Std. 83; ANSI E119 and E814; NFPA 70.

Aluminum Conductors: Where applicable for electrical equipment connections for aluminum wiring, provide the following supplemental requirements and work regardless of who furnishes the equipment or what type of equipment is affected. Review equipment submittals, installation documents and nameplates to determine if there are any warranty or UL limitations regarding copper versus aluminum wiring connections and equipment. If there are any limitations, provide local non-fused disconnect at or near equipment (external to the equipment) and terminate aluminum conductors to the line side terminals of the disconnect switch. Provide copper conductors from load side terminals of the disconnect switch to the respective equipment factory disconnect or terminals as applicable. Provide UL-Listed AA-8000 series compact-stranded conductors compliant with specifications, prevailing codes and end-use equipment manufacturer requirements. Provide appropriately UL-Listed connectors as recommended by conductor manufacturer.

Cables: Route cables perpendicular and parallel to the building architectural lines, surfaces, and structural members, keeping offsets to a minimum and following surface contours where possible. Maintain a uniform elevation for cable runs wherever possible. Support and anchor cables at maximum 4 foot intervals and within 12" of box or outlet in a manner that prevents sagging. Install cables in a manner that prevents overheating. Fasten cables directly to the structure using factory clamps and clips (zip ties and like products are not permitted) specifically designed for the respective cable (Caddy or equal). Cables may be utilized only if code-approved for the intended use and in the limited applications defined below.

Type MC (Metal-Clad) Cable: Form from continuous length of spirally wound, interlocked zinc-coated or galvanized (inside and outside) strip steel or aluminum jacket, with stranded copper conductors with 90 deg. C THHN insulation system. Provide only where permitted in the Conduit/Wire Material Schedule shown on the drawings

26 05 26.00 - GROUNDING AND BONDING FOR ELECTRICAL SYSTEMS

All metallic conduit, surface raceways, wireways, supports, cabinet and equipment shall be grounded.

26 05 29.00 - HANGERS AND SUPPORTS FOR ELECTRICAL SYSTEMS

It shall be the responsibility of the electrical contractor to supervise the installation of and pay for all additional members, wood or metal and labor which may be required to support any type of permanent or temporary electrical apparatus employed in the execution of the electrical contractor's work. Provide supports, anchors, sleeves and seals furnished as part of factory-fabricated equipment as required. Locations and routing that may be shown on plans are schematic and diagrammatic in nature. Metallic products shall be galvanized steel.

Conduit shall be supported by approved straps, fasteners and hangers. Hangers shall be suspended from rods. Perforated straps will not be acceptable. Fasteners shall be lead expansion shields in block or concrete, toggle bolts in hollow walls, machine screws on metal surfaces and wood screws on wood construction. At building expansion joints and where deflection is expected, conduits shall be provided with expansion fittings with bonding jumpers. Conduits passing through structural members shall be provided with stub and coupling or sleeve in the member. Where moisture conditions are encountered, a hole shall be drilled at the lowest point in the conduit run. Also provide sleeves for all fire wall and smoke partition penetrations (sealed accordingly).

All conduit shall be supported independently from all other building systems and shall be supported directly from structural components. Electrically related work shall not be supported from ductwork, ductwork hangers, ceiling supports, existing conduit supports, etc.

Use of synthetic or plastic "tie-wraps", "zip ties", "wire ties" and similar products are not permitted as a permanent means of anchoring, securing, supporting or otherwise installing any cables, conductors, conduits, raceways, devices, equipment or other electrical work.

All conduits, raceways and cables (where applicable) shall be routed parallel and perpendicular to building structural members. Any and all noncompliant work installed by the electrical contractor shall be removed and reinstalled by the electrical contractor to the satisfaction of the Owner's representative and the Engineer, at the expense of the electrical contractor. At building expansion joints and where deflection is expected, provide conduits with expansion fittings with bonding jumpers. Conduits passing through structural members shall be provided with stub and coupling or sleeve in the member. Where moisture conditions are encountered, a hole shall be drilled at the lowest point in the conduit run. Provide sleeves for all fire wall and smoke partition penetrations (sealed accordingly).

Stem lengths of all pendant fixtures shall be as directed by the owner's representative. All fasteners, hangers and method of hanging exposed work in finished areas shall be submitted to the owner's representative for review before installation. Fasteners shall be zinc-coated, type, grade, and class as required for a neat finished installation.

Place and secure anchorage devices. Use supported equipment manufacturer's setting drawings, templates, diagrams, instructions, and directions furnished with items to be embedded. Install anchor bolts to elevations required for proper attachment to supported equipment. Provide female expansion anchors, and install studs and nuts after equipment is positioned. Provide bushings for floor/wall-mounted equipment anchors to allow for resilient mounts between anchor bolts/studs and mounting hole in concrete.

Touchup Painting: Clean field welds and abraded areas of shop paint. Paint exposed areas immediately after erecting hangers and supports. Use same materials as used for shop painting.

Provide supports for multiple raceways capable of supporting combined weight of supported systems, equipment, connected systems and associated components/contents. Provide supports adequate in tension, shear, and pullout force to resist maximum loads calculated or imposed for this project, with a minimum structural safety factor of five times the applied force.

Coordinate installation of roof curbs, equipment supports, and roof penetrations.

Steel Slotted Support Systems: Comply with MFMA-4, factory-fabricated components for field assembly. Construct with all necessary fittings which mate and match with U-channel. Provide metallic coatings that are hot-dip galvanized after fabrication and applied according to MFMA-4. Provide channel dimensions that are selected for applicable load criteria. Comply with NECA 1 and NECA 101 unless requirements in this or other specification sections are stricter.

Multiple Raceways or Cables: Install trapeze-type supports fabricated with steel slotted, sized so capacity can be increased by at least 50 percent in future without exceeding specified design load limits. Secure raceways and cables to these supports with two-bolt conduit clamps, single-bolt conduit clamps, or single-bolt conduit clamps using spring friction action for retention in support channel as applicable.

Overhead Electric Work: Install work so that no raceway or cable is within six inches below roof deck(s). Suspend and support overhead electrical work from roof trusses and joists/joist girders only at panel points, at top cord only, unless otherwise indicated.

Strength of Support Assemblies: Where not indicated, select sizes of components so strength will be adequate to carry present and future static loads within specified loading limits. Minimum static design load used for strength determination shall be weight of supported components plus 200 lb.

Roof Decks: Do not suspend overhead hangers, or support any other overhead electrical work, from roof decks.

26 05 33.00 - RACEWAYS AND BOXES FOR ELECTRICAL SYSTEMS

Normal system power feeders and branch circuits shall be installed in separate raceways from emergency system power. All wiring for different power voltages shall be installed in raceway systems separate from each other. All wiring for the various electrical systems shall be installed in raceway systems separate from each other.

All fittings shall be set-screw or compression type steel, with insulated throats. Unless indicated otherwise on drawings or in other parts of the electrical specifications, all wiring of all systems shall be installed in conduit.

Conduit shall be cleaned inside before any wires are pulled. Conduit ends shall be capped and plugged with standard accessories as soon as conduit has been permanently installed. Conduit installed without conductors shall be provided with sweep bends and baling wire for pulling.

All joints shall be made tight with watertight couplings matching conduit and all corners shall be made with long radius elbows. The ends of all conduits shall be cut square and reamed and all joints brought to a shoulder. Conduit shall be continuous between outlets to make a complete installation and to provide a continuous ground. Suitable supports and fastening shall be provided for conduit.

All raceways shall be entirely free of plaster, mortar, water and other foreign matter before installing conductors or cables.

In general, gang type outlet boxes shall not be used. The outlet box locations indicated on drawings shall be considered approximate, and therefore, it shall be incumbent upon this contractor to study the general construction with relation to spaces and equipment surrounding each outlet. All outlet, switch and junction boxes shall be made of code galvanized steel complete with rings and screw cover plates and located where shown and noted on drawings. Where conduit is concealed, boxes shall not be less than 4" square x 1-1/2" deep. All boxes shall be equipped with proper covers to bring flush with finished wall surface.

Where outlet boxes occur in block, cinder, or concrete block, facing tile or other material where such materials form the finished wall surface, the opening for the box shall be cut neatly and of the size that the cover plate will cover all parts of the opening. Conduits shall be used on exposed raceways. In general, junction boxes shall be constructed of #12 gauge steel with removable front fastened on with counter sunk head screws or other approved means. For special application, junction boxes shall be noted, detailed and/or sized on the drawings or in the field as required.

Prior to rough-in, verify all box/device mounting heights and locations in field with Owners representative. In general, where not located at counter areas, the height of boxes from finished floor to center of boxes shall be as follows, unless otherwise noted on plans. In cases where using center of box for measurement would result in a switch-height device having an operable component higher than 48 inches above finished floor, install boxes lower as needed so that uppermost part of operable component is no higher than 48 inches.
Switches: 3'10"
Receptacles: 1'6" (unless counter height)
Telephone Outlets (desk phone): 1'6"
Telephone Outlets (Wall phone): 3'10"
Data Cable Outlets: 1'6"
Other devices: As directed in field.

26 05 53.00 - IDENTIFICATION FOR ELECTRICAL SYSTEMS

Provide manufacturers standard self-adhesive vinyl tape not less than 3 mils thick by 1-1/2" wide. Where applicable, install on all concealed raceways at connection to all junction boxes, pull boxes, equipment, wall/floor/roof penetrations, etc. Unless otherwise indicated or required by governing regulations, provide orange tape with black letters. Provide circuit identification bands for all cables and conductors. Provide manufacturers standard color coding for cable/conductor jacket and/or insulation for all cables and conductors of all systems. Match identification with marking system used in existing systems (where applicable), shop drawings, contract documents, and similar previously established identification for projects electrical work. Provide on all conductors of all systems.

The following insulation color code shall be used for system and voltage identification. This shall apply to both feeder and branch circuit wiring. Interchange of colors shall not be permitted.

208Y/120V System:	Black, Red, Blue
and White (neutral)	
Equipment Grounding:	Green
Systems:	To match existing
where applicable - verify in field.	

Provide engraved plastic-laminate sign on major units of electrical equipment, including panelboards, disconnects, starters, control panels, etc. Except as otherwise indicated, provide single line of text, 1/2" high lettering, on 1-1/2" high sign (2" high where 2 lines are required), white lettering in black field. Unless determined otherwise in field, provide text matching terminology and numbering of the contract documents and shop drawings. Secure to substrate with fasteners, except use adhesive where fasteners should not or cannot penetrate substrate.

All equipment and system identification nomenclature shown on drawings or listed herein is shown for general design and installation reference only. The actual nameplate, etc. nomenclature for this project shall be verified by electrical contractor in field prior to fabrication and where applicable, shall be an extension of existing nomenclature used on the site as determined in field by electrical contractor.

Equipment to Be Labeled: All enclosures for all electrical equipment furnished or installed under Divisions 26 and 28; Remote-controlled switches, dimmer modules, and control devices, via engraved wall plates; Miscellaneous Control Stations; Access doors and panels for concealed electrical items; Other similar equipment designated by owner's representative, architect or engineer in field.

26 05 84.00 - MECHANICAL EQUIPMENT

Provide all necessary electrically related work as required to render all mechanical equipment (including plumbing, heating, ventilating and air conditioning equipment) fully operational and fully compliant with all local and national codes. This includes, prior to ordering materials or commencing with rough-in, reviewing equipment submittal data and coordinating with installing contractors to ensure the correct size, rating and quantity of conductors are provided.

Provide raceway, wiring, connections, and terminations for power and interlocks for electrically operated equipment.

Provide disconnect switch ahead of all equipment, including controls, unless shown otherwise on the drawings. Provide NEMA 3R enclosures where installed outdoors and where installed indoors in areas subject to moisture. Ground metal frames of equipment by connecting frames to the grounded metal raceway and to a full-size green ground conductor. Provide the necessary electrical connections to the specified equipment. Where mechanical equipment lugs cannot accommodate conductor sizes, provide ILSCO ClearTap Insulated Multi-Tap Connectors.

Sizes, electrical ratings, etc. of equipment and wiring shown on drawings are based on the respective equipment basis of design. If different manufacturer(s) or model(s) are supplied, provide necessary coordination in field (prior to ordering materials and prior to rough-in) and provide the necessary size of related electrical equipment, wiring, conduit, etc.

Prior to furnishing submittals and prior to rough-in, determine exact electrically related characteristics, loads, voltages, disconnect and starter requirements, locations, mounting heights, connection points, etc. of mechanical equipment.

Disconnect and Controller Locations: Locations shown on drawings are indicated for schematic purposes only. Determine exact locations in field. Refer to Electrical Coordination Schedules on drawings. Provide disconnects, starters, accessories, wiring, connections, services, etc. where defined as "EC" in the schedule. Information in this section supplements the information in the schedules. Provide power wiring and connections for all equipment (including motor dampers and accessories where applicable) as required to render equipment fully operational. Install local disconnects and starters at 48 inches to top of outlet box or enclosure where applicable above finished floor/slab/grade. Provide flush mounted units in finished areas. Provide key operated manual starters where accessible to unauthorized personnel, including general public.

Maintenance Receptacles: Provide duplex GFCI receptacle within 25 feet of all electrically operated equipment of any nature that requires periodic testing or maintenance. This applies for all indoor and outdoor equipment. Provide Type WR duplex GFCI weatherproof receptacle for outdoor applications (including rooftops) and for applications subject to high humidity or moisture.

Domestic Water Heaters (Electric): Provide local disconnect switch, and power wiring and connections. Provide interlock wiring with circulating pumps, flow switches and aquastat controls where applicable.

Domestic Hot Water Circulating Pumps (Return Line): Provide manual starter with pilot light, and wire pump to operate through the aquastat. Refer to wiring diagrams on drawings for further definition.

Electronic Plumbing Fixture Valves: Provide electrical wiring and connections as required for full automatic operation of direct-wired electronic sensor operated valves. Install and wire 120V/24V remote box mounted transformers. Install above nearby accessible acoustical tile ceiling and provide local single-pole switch above ceiling at the transformer to switch primary power. Provide secondary fusing if not integral to the transformer (verify in field). Provide required 24VAC wiring (#14 AWG "MC" Cable with ground), concealed. Field coordinate work carefully prior to rough-in.

General Control Wiring Requirements: Unless specifically indicated as empty conduit on drawings or herein, provide electrical control and interlock work as shown on drawings. Provide additional control work as specifically indicated herein. Coordinate HVAC thermostat and sensor locations in field (case by case) with Architect, Owner's Representative and equipment installer to ensure that they are placed in locations that will not interfere with furniture, equipment, artwork, wall-hung specialties, room finishes, etc. Field-verify these wall locations case by case, prior to rough-in, since locations shown on drawings are schematic only.

Schematic Thermostat and Sensor Locations: Refer to applicable drawings and documents.

Low Voltage Thermostats and Sensors: Provide 4-inch square by 2-1/8 inch deep wall outlet boxes at 46 inches above finished floor to center of outlet box (with single-gang rings) for each unit. Provide one 3/4 inch empty conduit from each location, turned out above accessible ceilings (in joist space or against overhead slab/deck).

KLH ENGINEERS
MECHANICAL/ELECTRICAL ENGINEERS
WWW.KLHENGRS.COM
KOHRS LONNEMANN HEIL ENGINEERS, INC.
444 SOUTH FRONT STREET
COLUMBUS, OHIO 43215
800-354-9783 614-228-2180
614-228-2183 FAX
FORT THOMAS, KENTUCKY
LEXINGTON, KENTUCKY
LOUISVILLE, KENTUCKY
NEW YORK, NEW YORK

PERMIT SET - FOR CONSTRUCTION

© 2022 STARBUCKS COFFEE COMPANY

STARBUCKS COFFEE COMPANY
2401 UTAH AVENUE SOUTH
SEATTLE, WASHINGTON 98134
(206) 318-1575

THESE DRAWINGS AND PROJECT MANUAL ARE CONFIDENTIAL AND SHALL REMAIN THE SOLE PROPERTY OF STARBUCKS CORPORATION, WHICH IS THE OWNER OF THE COPYRIGHT IN THIS WORK. THEY SHALL NOT BE REPRODUCED (IN WHOLE OR IN PART), SHARED WITH THIRD PARTIES OR USED IN ANY MANNER ON OTHER PROJECTS OR EXTENSIONS TO THIS PROJECT WITHOUT THE PRIOR WRITTEN CONSENT OF STARBUCKS CORPORATION. THESE DRAWINGS AND SPECIFICATIONS ARE INTENDED TO EXPRESS DESIGN INTENT FOR A PROTOTYPICAL STARBUCKS STORE (WHICH IS SUBJECT TO CHANGE AT ANYTIME) AND DO NOT REFLECT ACTUAL SITE CONDITIONS. NEITHER PARTY SHALL HAVE ANY OBLIGATION NOR LIABILITY TO THE OTHER EXCEPT AS STATED ABOVE UNTIL A WRITTEN AGREEMENT IS FULLY EXECUTED BY BOTH PARTIES.

STARBUCKS TEMPLATE VERSION i2022.10.23

Gensler
MAIN OFFICE
M. ARTHUR GENSLER JR. & ASSOCIATES
FL QUALIFIER'S LIC. NO. AR96486
45 FREMONT ST., SUITE 1500
SAN FRANCISCO, CA 94105 USA
Tel (415) 433.3700
Fax (415) 836.4599
SATELLITE OFFICE
10 NORTH PARK PLACE
SUITE 400
MORRISTOWN, NJ 07960 USA
Tel (973) 290.8500

PROJECT NAME:
ST LUCIE WEST & SW
CASHEMERE BLVD

PROJECT ADDRESS:
920 SW SAINT LUCIE BLVD,
PORT ST.LUCIE, FL 34986

STORE #: 81616
PROJECT #: 101357-001

ISSUE DATE: 06-27-2025

STORE DESIGNER: ASHLEY SUEIRAS
DESIGN MANAGER: GENSLER
ENGINEER OF RECORD: KLH ENGINEERS

Revision Schedule

Rev	Date	By	Description

SHEET TITLE:
ELECTRICAL OUTLINE SPECIFICATIONS
SCALE: AS SHOWN

SHEET NUMBER:
E005

Identify conduit in ceiling cavity; provide sweep bends, bushings and drag line.

260590.00 - ELECTRICAL SPECIALTIES

Product Data
For equipment, materials and systems specified in this section. Include product data, descriptive information, technical data, wiring diagrams, etc.

Hand Dryers
Subject to compliance with specifications and project requirements, provide products by one of the following manufacturers: Excel, Dyson, World, Saniflow or Comac Blast Hand Dryer.
Provide surface wall mounted units equivalent to Excel ThinAir TA series, including the following features: ADA-compliant protrusion from wall; 4-inch maximum depth; Nominal 9-inches wide X 14-inches height; Washable pre-filter; Automatic sensor activation; Nominal 545W of heating; Nominal 915 total watts at 120V; 10-15 seconds for complete drying time; Nominal 10 lbs. in weight.; Adjustable heat settings of high, low, medium and off; Adjustable speed and sound control; Externally-visible service LED; Optical sensor next to air outlet that activates hand dryer assembly, and operates as long as hands are under the air outlet (with timed lockout feature if hands are not removed).
Provide hand dryer covers that are one-piece, heavy-duty, reinforced, corrosion-resistant, lightweight, unbreakable, and installed with tamper-proof hardware.

- Provide exposed surfaces that are brushed stainless steel.
- Feed from dedicated 20A/1P GCI branch breaker (verify with manufacturer's installation instructions prior to ordering breakers and prior to rough-in). Provide permanently installed lock-out/tag-out device at source circuit breaker for each unit. Coat internal hand dryer parts according to Underwriters' Laboratories, Inc. requirements. Internally ground entire mechanism. Mount hand dryer heating element inside the blower housing so it is vandal proof. Protect unit with automatic resetting thermostat that opens whenever air flow is cut off and closes when flow of air is resumed.
- Coordinate all mounting heights with Design Professional prior to rough-in. Unless indicated otherwise on architectural documents or directed otherwise by Design Professional in field, install units at the following mounting heights (from finished floor to bottom of dryer). Where more than one unit is shown in a toilet room, coordinate with Design Professional regarding which units are to be installed at which heights.
  Men's: First unit at 37 inches (for compliance with ADA for use by the handicapped), and additional units (if any) at 45 inches.
  Ladies': First unit at 37 inches (for compliance with ADA for use by the handicapped), and additional units (if any) at 43 inches.
  Teenagers': First unit at 37 inches (for compliance with ADA for use by the handicapped), and additional units (if any) at 41 inches.
  Small Children: First unit at 37 inches (for compliance with ADA for use by the handicapped), and additional units (if any) at 35 inches.

26 09 19.00 - ENCLOSED CONTACTORS

Provide contactors equipped with external pilot lights in cover, and external HOA selector switches in cover. Wire contactors for lighting applications so that the "AUTO" position is the normal activated condition (i.e. photocell controlled, photocell/time-clock controlled, remote switch controlled, BAS controlled, etc.); so that the "OFF" position is manual override to turn lighting off; and so that the "HAND" position is manual override to turn lighting on. Provide contactors with field convertible N.O./N.C. contacts and descriptive nameplates.

Electrically Held Contactors: Provide contactors equal to Square D Class 8903 (or Allen-Bradley Bul. 500L-BA*94 series) for tungsten lighting loads, ballast lighting loads, and small resistance heating loads. Provide contactors that are electrically operated and electrically held (EOEH). Provide contactors in factory NEMA 1 enclosures, with 120V coils (unless indicated otherwise elsewhere or otherwise required to render controls fully operable). Provide "dry" contacts rated at 30A, minimum 250V (600V if required by application). Provide number of poles (minimum of three poles) and number of contactors as required for each application. Field verify coil voltage ratings.

26 09 23.00 – LOCAL LIGHTING CONTROLS

Submittal Requirements
Product Data
For equipment, materials and systems specified in this section. Include product data, descriptive information, technical data, wiring diagrams, load restrictions, etc.

General Requirements
Finishes & Wall Plates: Refer to specification 262726.00 – Wiring Devices and match all requirements.

Toggle Switches:
Refer to specification 262726.00 – Wiring Devices.

Momentary-Contact Toggle Switches: Provide Standard of Quality equal to Legrand LVS-1, 3 Amp, 24 VAC/VDC, single-pole, double-throw with center rest, designed to fit conventional toggle switch openings.

Wall-Box Dimmers
Provide dimmer switches equal to Leviton #TSL06 series in configurations shown on the drawings. Dimmer shall be compatible with the light fixtures controlled, specification grade, full dimming range. DO not break off side heat-sink sections when ganging dimmers. Modular, full wave, solid-state units with integral, quiet on-off switches, with audible frequency and EMI/RFI suppression filters.

Photocells:
Provide photocells equal to Tork #2107, 2104, 3010, or 3002 depending on the application and rated for the applicable voltage. Provide delay up to two minutes to prevent false switching due to vehicular lights or lighting. Provide mobile light level selector. Provide gasketed, heavy duty die cast zinc housing and base. Determine exact mounting locations and adjustments in field relative to structural and site conditions. Aim northward where not conflicting with artificial light sources.

Time Clocks
365-Day Multi-Purpose Time Clocks: Provide time clock that is programmable 365-day/24-hour with override controls and holiday option. Provide number of channels indicated on the drawings. Provide required external contactors, relays, etc. to render the control systems fully operational. Verify zone control requirements in field prior to rough-in. Provide 100-hour carryover.

Occupancy Sensors, Dual Technology Wall Switches: Provide Wattstopper DW-100 wall switch (or equivalent) and configure as manual on, auto off (vacancy sensor) unless otherwise specified on drawings. Provide with time delay as specified on drawings. If no time delay is specified, program to 10 minutes.

Occupancy Sensors, Dual Technology Ceiling Sensors: Provide Wattstopper DT-300 ceiling mounted occupancy sensor (or equivalent). Provide with time delay as specified on drawings. If no time delay is specified, program to 20 minutes. Adjust sensitivity based on field conditions and occupancy of room to provide 100% coverage without nuisance tripping. Provide Wattstopper BZ-150 universal voltage pack(s) as required to properly power all occupancy sensors and provide switching per the design intent. In areas where multiple occupancy sensors control a single zone together, interlock occupancy sensors/power packs per manufacturer instructions to meet control intent.

26 24 16.00 – PANELBOARDS

Submittal Requirements
Product Data
For each provide bus configuration, current ratings, voltage ratings, SCCR Ratings, overcurrent protective device(s), surge suppression device(s), accessory, and components indicated. Include dimensions and manufacturers' technical data on features, performance, electrical characteristics, ratings, accessories, and finishes.

Subject to compliance with requirements, provide panelboard products of one of the following (for each type and rating of panelboard and enclosure): Square D Company, GE/ABB, Siemens, Eaton/Cutler-Hammer.

Panelboards shall bear UL labels for their specific applications. Panelboards shall be suitable for service voltage with number of branch circuits of capacity scheduled. Refer to the drawings for bussing material. Where copper is specified provide silver or tin plating. Unless otherwise indicated, panelboards and sections thereof, if any, shall have main-lugs-only of capacity equal to, or greater than, the rating or setting of the over the current protective device next back on the line. All circuit breaker panelboard bus assemblies shall be of the distributed (sequence) bussing type throughout, so that any 2 adjacent single pole breakers and/or spaces shall be replaceable by a 2-pole internal common trip breaker, and any 3 adjacent single pole breakers and/or spaces shall be replaceable by a 3 pole internal common trip breaker, 15 amp through 70 amp inclusive, without disturbing any other breaker. All panelboards shall be UL listed and labeled for use as service entrance equipment where being used as such.

208Y/120V panelboards shall be equal to Square D NQ with bolt-on branch breakers

All branch circuit breakers shall be full ambient compensated thermal magnetic molded case with quick-make and quick-break action and positive handle trip indication, both on manual and on automatic operation. Breakers shall be of the over-the-center toggle operating type with the handle going to a position between "on" and "off" to indicate automatic tripping. All breakers shall be bolt-on type.

All circuit breakers shall be full size. "Tandem" or "split" breakers shall not be permitted. All multi-pole breakers shall have internal common trip with all load side box lugs of one breaker in the same gutter. All circuit breakers shall have sealed cases to prevent tampering. All 15 and 20 ampere branch circuit breakers shall be UL Listed as SWD (switching duty). All 15-70 ampere branch circuit breakers shall be HACR Type. All GFCI circuit breakers shall be UL Class A with maximum threshold of 5 mA. All branch circuit breakers serving all ballasted (fluorescent/HID) lighting loads shall be HID rated.

Provide all electrical distribution related equipment with appropriately braced bussing and properly rated breakers, fuses, etc. for the available fault currents. In existing buildings where fault current values are not indicated on drawings, coordinate with existing "upstream" distribution equipment provide equipment SCCR to meet or exceed same.

Provide barriers around any energized phase busbar or terminal supplied from a feeder tap, transformer, or service entrance conductors.

Fill out panelboard's circuit directory card upon completion of installation work. Directories shall be neatly typewritten. All panelboard directories shall include the actual room names/numbers that are selected for interior signage/designation.

All recessed panelboards shall be provided with a minimum of three 1-1/4" empty conduits terminated to a single 12" X 12" X 6" deep junction box above accessible ceiling.

26 27 26.00 - WIRING DEVICES

Submittal Requirements
Product Data
For each type include electrical characteristics, configurations, ratings, markings, colors, etc.

Unless specifically indicated otherwise, or directed otherwise in field, coordinate finishes for wiring devices with architect and owner prior to ordering. Where applicable, devices on different branches of power shall be a different color.

Provide grounded ("neutral") conductors in all wall switch, dimmer and other lighting control outlet boxes, even if not immediately utilized.

Provide wall plates with engraved legends where indicated on drawings and/or where required per 26 05 53.00 - IDENTIFICATION FOR ELECTRICAL SYSTEMS Section. All device wall plates shall be standard size; "midway", "oversized" ("jumbo") or "extra deep" wall plates shall not be acceptable. Construct with metal screws for securing plates to devices; screw heads colored to match finish of plates. Except where/if indicated otherwise on drawings, wall plates in finished areas shall be commercial specification grade, satin finish stainless steel, with beveled edges, equal to Leviton Type 430 series. Wall plates in unfinished areas shall be galvanized steel unless otherwise noted. Refer to architectural finish schedules and owner representative for additional information.

Wall-Box Type Lighting Controls:
Refer to specification 260923.00 – Local Lighting Controls for types not listed here.

Toggle Switches:
Provide toggle switches equal to Leviton #122x-2 series in configurations shown on the drawings. Provide switches that are flush, self-grounding with green ground screw, back and side wired, and specification grade. 120/277V, 20A, AC quiet type.

Receptacles:

Special purpose receptacles shall be of the size, type and manufacturer as indicated on the plans or as determined in field.

Weather Resistant (WR) GFCI Receptacles: Provide for all receptacles installed in damp or wet locations. Any receptacle shown on the drawings with "WP/GFCI" next to it denoting exterior cover shall be installed with a WR GFCI receptacle. Provide duplex weather resistant receptacles equal to Leviton # W7899 series. Provide Weather-Resistant Receptacles with UL "WR" marking. For receptacle circuits protected with 15A breakers, provide NEMA 5-15R equivalents.

Duplex and Single Specification Grade Receptacles: 2-pole, 3-wire grounding, self-grounding, green grounding screw, ground terminals and poles internally connected to mounting yoke, color coded base, 20-amperes, 125-volts, with metal plaster ears, back and side wiring, NEMA configuration 5-20R. Provide duplex receptacles equal to Leviton #5362 series. For receptacle circuits protected with 15A breakers, provide NEMA 5-15R equivalents. Provide receptacles equal to Leviton #5361 series for simplex (single) applications. Provide clock hanger receptacles equal to Leviton #5361-CH.

Self-Grounding Commercial Specification grade, Duplex Receptacles, Ground-Fault Circuit Interrupters: Feed-thru type, capable of protecting connected downstream receptacles on single circuit, grounding type UL-rated 943, Class A, Group 1, specification grade, 20-amperes rating (device and feed-thru), 125-volts, 60 Hz; with solid-state ground-fault sensing and signaling (maximum threshold of 5mA at 0.025 seconds maximum); equip with 20-ampere plug configuration, NEMA 5-20R. Provide ground fault circuit interrupter duplex receptacles equal to Leviton #8898 series. For receptacle circuits protected with 15A breakers, provide NEMA 5-15R equivalents. Where GFCI protected receptacles are shown on drawings, provide a separate GFCI receptacle for each one shown. Do not feed downstream receptacles from load-side (GFCI-protected) terminals of upstream receptacles.

26 28 13.00 – FUSES

Extra Material
Fuses: Furnish fuses equal to 10% of project quantity not exceeding (10) for each amperage. Furnish no fewer than (2) for single phase applications and (3) for three phase applications.

All fuses shall be of the same manufacturer. Subject to compliance with requirements, provide fuses of one of the following: Bussman, LittelFuse, Shawmut (A4BQ series).

Except as otherwise indicated, provide fuses of types, sizes, ratings, and average time-current and peak let-through current characteristics indicated, which comply with manufacturer's standard design, materials, and constructed in accordance with published product information, and with industry standards and configurations. Fuses 1 ampere through 600 amperes shall be rejection type. Fuses 601 amperes through 6000 amperes shall be Hi-Cap, bolt type.

Provide UL Class RK1 time-delay, dual-element (with pure silver links) fuses equal to Bussman #LPS-RK1 (600V) or Bussman #LPN-RK1 (250V) rated 60 Hz with 200,000 RMS symmetrical interrupting current rating for protecting service entrances and distribution feeders 600 amperes and below.

Provide UL Class RK5 time-delay, dual-element (with pure silver links) fuses equal to Bussman #LPS-RK5 (600V) or Bussman #LPN-RK5 (250V) rated 60 Hz with 200,000 RMS symmetrical interrupting current rating for protecting general duty motors.

Provide factory fuse identification labels, installed on the inside of the door of each switch indicating type and size of fuses installed. For types and ratings required, furnish additional fuses, amounting to 10 percent of fuses supplied, but not less than one set of 3 of each kind.

Each fuse shall be clearly factory marked with classification, characteristics, ampere ratings, voltage ratings, etc. Fuses shall not be shipped installed in switches nor shall they be installed in the equipment until the equipment until the equipment is ready to be energized.

Prior to installing fuses for protection of specific equipment, motors, etc., verify recommended fuse size/type in field from respective equipment manufacturer. If a conflict in fuse size/type results between manufacturer's recommendations and above specifications, contact engineer. Provide all required fuses under base bid. Install fuses in fused switches.

26 28 16.00 - ENCLOSED SWITCHES AND CIRCUIT BREAKERS

Submittal Requirements
Product Data
For each type include dimensioned elevations, sections, weights, and manufactures' technical data on features, performance, electrical characteristics, ratings, accessories, and finishes. Include current ratings, voltage ratings, short circuit current ratings, accessories, breaker features, trip unit information as appropriate, etc.

Subject to compliance with requirements, provide equipment of one of the following manufacturers: ABB/GE; Siemens/ITE; Square D Co.; Westinghouse/Cutler-Hammer. Disconnect switches shall be equal to Square D Type HD. All Safety Switches/Disconnects shall be heavy duty, safety type, quick make and quick break and externally operated. Unless noted otherwise on drawings or directed otherwise in field, all disconnect switches shall be fused. Unless noted otherwise on drawings or directed otherwise in field, brace all disconnect switches for 200,000 A.I.C. Provide heavy-duty switches, with fuses of classes and current ratings indicated and UL listed for use as service equipment under UL Standard 98 or 869. Where current limiting fuses are indicated, provide switches with non-interchangeable feature suitable only for current limiting type fuses. Install disconnect switches within sight of controller position unless otherwise indicated.

26 51 00.00 - LIGHTING

Submittal Requirements
Product Data
For each type include detailed product information, light source, color temperature, color rendering index, lumen outputs, life, driver manufacturer, model and type, ceiling connection details, integral controls as applicable, drawings of custom fixtures or components, wiring diagrams, warranty, etc. Arrange luminaire submittals in booklet form with separate sheets for each luminaire, assembled by luminaire "type" in alphabetical order.

All recessed luminaires shall be equipped with necessary plaster frames and surface trim.

All junction boxes and serviceable components for recessed luminaires shall be readily accessible for service or replacement from below the ceiling, without removing any ceiling components (other than tiles).

All luminaires utilized for emergency and/or egress lighting shall be connected ahead of switching. All drivers of the same type shall be of the same manufacturer and catalog number. All LED modules of the same type shall be of the same manufacturer and catalog number.

Light Emitting Diode (LED) Systems: Provide factory installed LED modules that are specifically designed for, and matched and mated to, the respective luminaire in which they are used. Provide LED modules that can easily be replaced in the field and are readily accessible for replacement. Provide color temperature as indicated in Luminaire Schedule. Provide factory installed driver(s) for the LED source utilized that are specifically coordinated to the LED source and luminaire in which they are used. Provide driver(s) having specific operating characteristics defined in the Luminaire Schedule. Provide driver(s) that can easily be replaced in the field and are readily accessible for replacement. Provide specification sheet for the specific driver as part of the Luminaire Submittal. Provide Total Harmonic Distortion (THD) rating of less than 20 percent. Provide factory-installed integral filtering system to ensure THD does not exceed 20 percent regardless of quantities and/or mixes with other manufactured LED systems.

All surface and recessed ceiling luminaires installed on grid or tile ceilings shall be installed to agree with module of ceiling either displacing a tile, or unit on center of tile, or centered on grid lines.

Provide luminaires and/or luminaire outlet boxes with hangers to properly support luminaire weight. All luminaires installed in or on suspended ceiling systems shall be anchored directly to the building structural system above. Such anchoring shall be independent of the ceiling support system. All luminaires shall be installed plumb and level. Support surface mounted luminaires greater than 2 feet in length at a point in addition to the outlet box luminaire stud.

Occupancy Adjustments: When requested within 12 months of date of Substantial Completion, provide on-site assistance in adjusting aimable luminaires to suit actual occupied conditions. Provide up to two visits to Project during other-than-normal occupancy hours for this purpose. Some of this work may be required after dark. Adjust aimable luminaires in the presence of Owner's Representative and Design Professionals.

KLH ENGINEERS
MECHANICAL/ELECTRICAL ENGINEERS
WWW.KLHENGRS.COM
KOHRS LONNEMANN HEIL ENGINEERS, INC.
444 SOUTH FRONT STREET
COLUMBUS, OHIO 43215
800-354-9783 614-228-2180
614-228-2183 FAX
FORT THOMAS, KENTUCKY
LEXINGTON, KENTUCKY
LOUISVILLE, KENTUCKY
NEW YORK, NEW YORK

PERMIT SET - FOR CONSTRUCTION

© 2022 STARBUCKS COFFEE COMPANY

STARBUCKS COFFEE COMPANY
2401 UTAH AVENUE SOUTH
SEATTLE, WASHINGTON 98134
(206) 318-1575

THESE DRAWINGS AND PROJECT MANUAL ARE CONFIDENTIAL AND SHALL REMAIN THE SOLE PROPERTY OF STARBUCKS CORPORATION, WHICH IS THE OWNER OF THE COPYRIGHT IN THIS WORK. THEY SHALL NOT BE REPRODUCED (IN WHOLE OR IN PART), SHARED WITH THIRD PARTIES OR USED IN ANY MANNER ON OTHER PROJECTS OR EXTENSIONS TO THIS PROJECT WITHOUT THE PRIOR WRITTEN CONSENT OF STARBUCKS CORPORATION. THESE DRAWINGS AND SPECIFICATIONS ARE INTENDED TO EXPRESS DESIGN INTENT FOR A PROTOTYPICAL STARBUCKS STORE (WHICH IS SUBJECT TO CHANGE AT ANYTIME) AND DO NOT REFLECT ACTUAL SITE CONDITIONS. NEITHER PARTY SHALL HAVE ANY OBLIGATION NOR LIABILITY TO THE OTHER (EXCEPT STATED ABOVE) UNTIL A WRITTEN AGREEMENT IS FULLY EXECUTED BY BOTH PARTIES.

STARBUCKS TEMPLATE VERSION |2022.10.23

Gensler
MAIN OFFICE
M. ARTHUR GENSLER JR. & ASSOCIATES
FL QUALIFIER'S LIC. NO. AR96486
45 FREMONT ST, SUITE 1500
SAN FRANCISCO, CA 94105 USA
Tel (415) 433.3700
Fax (415) 836.4599
SATELLITE OFFICE
10 NORTH PARK PLACE
SUITE 400
MORRISTOWN, NJ 07960 USA
Tel (973) 290.8500

PROJECT NAME:
ST LUCIE WEST & SW CASHEMERE BLVD

PROJECT ADDRESS:
920 SW SAINT LUCIE BLVD,
PORT ST.LUCIE, FL 34986

STORE #: 81616
PROJECT #: 101357-001
ISSUE DATE: 06-27-2025
STORE DESIGNER: ASHLEY SUEIRAS
DESIGN MANAGER: GENSLER
ENGINEER OF RECORD: KLH ENGINEERS

Revision Schedule

Rev	Date	By	Description

SHEET TITLE:
ELECTRICAL OUTLINE SPECIFICATIONS
SCALE: AS SHOWN

SHEET NUMBER:
E006

ELECTRICAL SCOPE OF WORK SUMMARY

THE FOLLOWING SCOPE OF WORK IS BASED ON THE LANDLORD'S WORKLETTER EXHIBIT C. THIS SCOPE OF WORK IS NOT INTENDED TO INDICATE THE FULL SCOPE, BUT ONLY A BROAD SUMMARY. THE GENERAL CONTRACTOR SHALL REFERENCE THE COMPLETE WORKLETTER FOR A MORE DETAILED DESCRIPTION OF WORK BY BOTH PARTIES. ANY QUESTIONS REGARDING SCOPE SHALL BE BROUGHT TO STARBUCKS ATTENTION FOR CLARIFICATION. RESPONSIBILITY INDICATED BELOW MEANS FURNISHED, PERMITTED AND INSTALLED BY THE PARTY INDICATED.

WORK DESCRIPTION	RESPONSIBILITY	
	LANDLORD	STARBUCKS
MAIN BUILDING SERVICE AND POWER METER	(X)	
ELECTRICAL PANELS AND FEEDERS	(X)	
TEMPORARY POWER	(X)	
ELECTRICAL PANEL BREAKERS	(X)	
ABOVE FLOOR BRANCH CIRCUIT DISTRIBUTION		(X)
UNDER FLOOR / SLAB POWER CONDUITS IN BUILDING (WIRING BY STARBUCKS)	(X)	
UNDERGROUND SITE CONDUITS FOR DT, SIGNS, MENU BOARD, DETECTOR LOOPS & DCB (WIRING / CABLING BY STARBUCKS)	(X)	
SITE LIGHTING	(X)	
EXTERIOR BUILDING & PATIO LIGHTING	(X)	
DATA & PHONE SERVICE, DMARC & (2) 2" CONDUITS TO STARBUCKS SPACE	(X)	
DT WINDOW POWER	(X)	
DT WINDOW EXTERIOR LIGHTS (2 EACH)	(X)	
FIRE ALARM SYSTEM	(X)	

KEYED NOTES

E1 RECEPTACLE TO BE MOUNTED ON EXTERIOR BOLLARD. REFER TO ELECTRICAL SITE PLAN FOR UNDERGROUND CONDUIT ROUTING.

E4 PROVIDE POWER AND CONTROL WIRING, CONNECTIONS, ETC. FOR SIGNAGE. COORDINATE EXACT LOCATION, HEIGHT, AND ELECTRICAL REQUIREMENTS WITH SIGNAGE INSTALLER AND PROVIDE ELECTRICAL WORK ACCORDINGLY. WHERE THE SIGN IS NOT PROVIDED WITH AN INTEGRAL DISCONNECTING MEANS, PROVIDE FLUSH-MOUNTED, LOCAL DISCONNECT SWITCH INSTALLED IN A CONCEALED, BUT ACCESSIBLE, LOCATION WITHIN SITE OF THE SIGN. WHERE THIS IS NOT POSSIBLE, PROVIDE LOCK-OUT, TAG-OUT BREAKER IN SOURCE PANELBOARD IN LIEU OF LOCAL DISCONNECT SWITCH AND A LABEL INSIDE THE SIGN ENCLOSURE IDENTIFYING THE BREAKER'S LOCATION PER NEC 600.6(A)(2).

E16 SMOKE DETECTOR INDICATED IS FOR SHUTDOWN OF ASSOCIATED MECHANICAL EQUIPMENT (TAGGED ADJACENT TO THE DETECTOR). QUANTITY AND TYPE SHOWN IS SCHEMATIC ONLY, PROVIDE QUANTITIES AND TYPES AS NEEDED FOR THE SPECIFIC MEANS AND METHODS USED. MECHANICAL CONTRACTOR SHALL INSTALL ALL DETECTORS THAT ARE INSIDE OF DUCTWORK. PROVIDE ALL RELATED WORK SO THAT WHEN SMOKE IS DETECTED THE ASSOCIATED MECHANICAL EQUIPMENT SHUTS DOWN UNTIL ALARM IS CLEARED AT THE FIRE ALARM PANEL. REFER TO FIRE ALARM SPECIFICATIONS FOR MORE INFORMATION.

GENERAL NOTES

A. REFER TO ELECTRICAL DETAIL SHEETS FOR EXACT LOCATIONS AND MOUNTING HEIGHTS OF ELECTRICAL DEVICES.

B. THE ELECTRICAL CONTRACTOR IS RESPONSIBLE FOR CONFIRMING ALL VOLTAGE REQUIREMENTS ON ALL EQUIPMENT AND PROVIDING BUCK-BOOST TRANSFORMERS AS MAY BE NEEDED FOR CODE. ALL ARE NOT NECESSARILY INDICATED.

C. ELECTRICAL CONTRACTOR SHALL COORDINATE WITH PLUMBING AND HEATING, VENTILATING, AND AIR CONDITIONING (HVAC) CONTRACTORS FOR ANY ADDITIONAL EQUIPMENT NEEDING POWER.

D. ANY EQUIPMENT NOTED AS 'FUTURE' SHALL BE PROVIDED WITH APPROPRIATE RECEPTACLES AND WIRING TO ENABLE FUTURE OPERATION.

E. GROUND FAULT CIRCUIT INTERRUPTER (GFCI) BREAKERS (NOT RECEPTACLES) SHALL BE UTILIZED WHERE REQUIRED BY CODE AND AT ANY FLOOR BOXES. PROVIDE DEDICATED NEUTRAL WIRE FOR ALL THESE CIRCUITS.

F. EQUIPMENT REQUIRES CONNECTION TO THE BUILDING ELECTRICAL SYSTEM. FURNISH AND INSTALL ALL NECESSARY CONDUIT, WIRE, CONNECTIONS, RECEPTACLES AND OVERCURRENT PROTECTION NECESSARY TO ENSURE THE EQUIPMENT FUNCTIONS PROPERLY AND COMPLIES WITH ALL APPLICABLE LOCAL AND NATIONAL CODES. COORDINATE EQUIPMENT REQUIREMENTS WITH MANUFACTURER CUT SHEET PRIOR TO ROUGH-IN.

G. ALL FRONT BAR J-BOXES AND OUTLETS SHALL BE SURFACE MOUNTED. PROVIDE CONDUITS AS NEEDED AND ONE (1) ADDITIONAL SPARE CONDUIT BETWEEN ALL J-BOXES FOR FUTURE ELECTRICAL REQUIREMENTS. ALL J-BOXES SHALL BE POSITIONED TO AVOID OBSTRUCTION OF ANY EQUIPMENT SUCH AS REFRIGERATORS AND DISHWASHERS.

H. REFERENCE LANDLORD WORK LETTER FOR DIVISION OF ELECTRICAL SCOPE OF WORK AND COORDINATE WITH STARBUCKS CONSTRUCTION MANAGER.

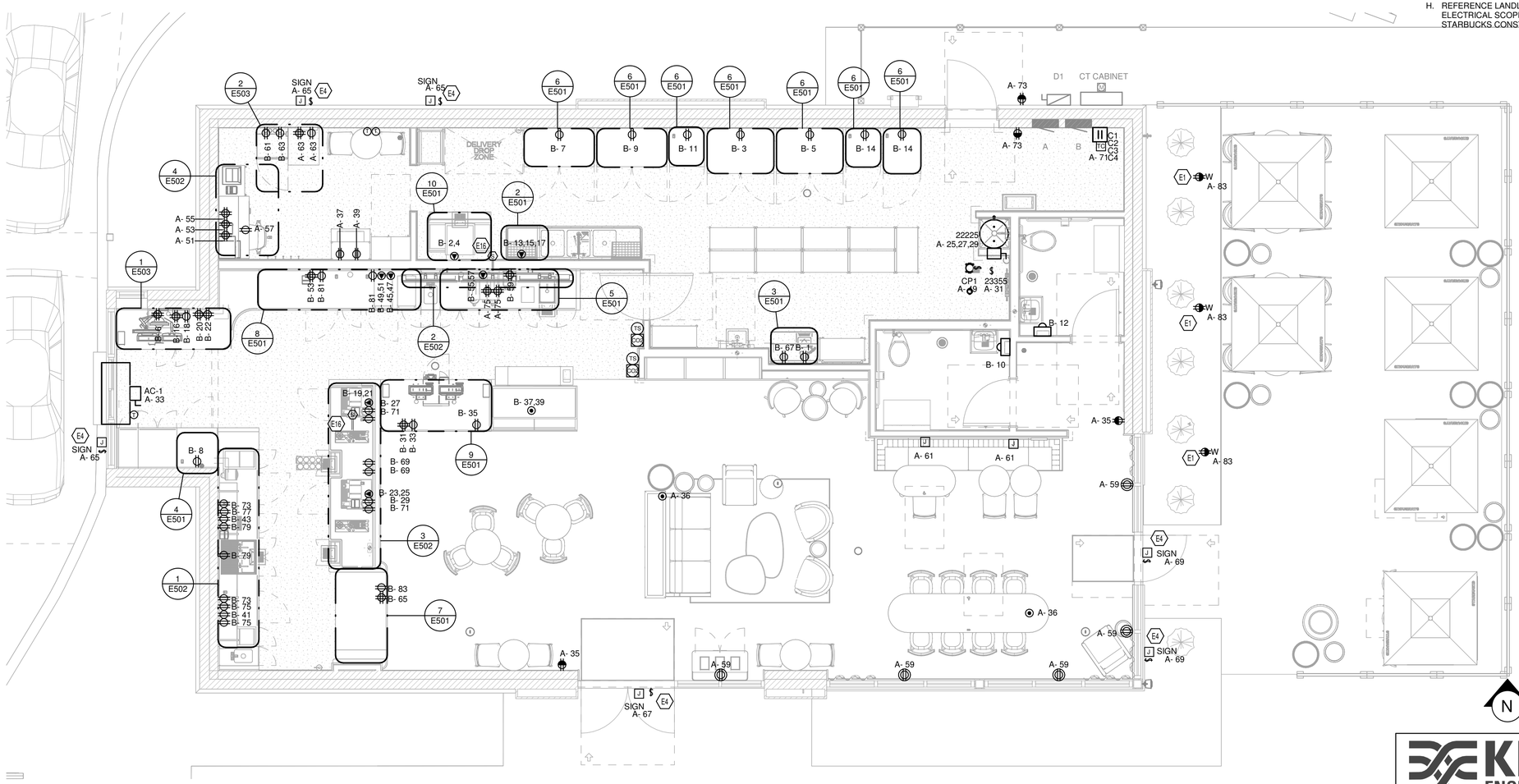

1 ELECTRIC POWER PLAN
1/4" = 1'-0"

KLH ENGINEERS
MECHANICAL/ELECTRICAL ENGINEERS
WWW.KLHENGRS.COM
KOHRS LONNEMANN HEIL ENGINEERS, INC.
444 SOUTH FRONT STREET
COLUMBUS, OHIO 43215
800-354-9783 614-228-2180
614-228-2183 FAX
FORT THOMAS, KENTUCKY
LEXINGTON, KENTUCKY
LOUISVILLE, KENTUCKY
NEW YORK, NEW YORK

PERMIT SET - FOR CONSTRUCTION

© 2022 STARBUCKS COFFEE COMPANY

STARBUCKS COFFEE COMPANY
2401 UTAH AVENUE SOUTH
SEATTLE, WASHINGTON 98134
(206) 318-1575

THESE DRAWINGS AND PROJECT MANUAL ARE CONFIDENTIAL AND SHALL REMAIN THE SOLE PROPERTY OF STARBUCKS CORPORATION, WHICH IS THE OWNER OF THE COPYRIGHT IN THIS WORK. THEY SHALL NOT BE REPRODUCED (IN WHOLE OR IN PART), SHARED WITH THIRD PARTIES OR USED IN ANY MANNER ON OTHER PROJECTS OR EXTENSIONS TO THIS PROJECT WITHOUT THE PRIOR WRITTEN CONSENT OF STARBUCKS CORPORATION. THESE DRAWINGS AND SPECIFICATIONS ARE INTENDED TO EXPRESS DESIGN INTENT FOR A PROTOTYPICAL STARBUCKS STORE (WHICH IS SUBJECT TO CHANGE AT ANYTIME) AND DO NOT REFLECT ACTUAL SITE CONDITIONS. NEITHER PARTY SHALL HAVE ANY OBLIGATION NOR LIABILITY TO THE OTHER (EXCEPT STATED ABOVE) UNTIL A WRITTEN AGREEMENT IS FULLY EXECUTED BY BOTH PARTIES.

STARBUCKS TEMPLATE VERSION i2022.10.23

Gensler
MAIN OFFICE
M. ARTHUR GENSLER JR. & ASSOCIATES
FL QUALIFIER'S LIC. NO. AR96486
45 FREMONT ST, SUITE 1500
SAN FRANCISCO, CA 94105 USA
Tel (415) 433.3700
Fax (415) 836.4599
SATELLITE OFFICE
10 NORTH PARK PLACE
SUITE 400
MORRISTOWN, NJ 07960 USA
Tel (973) 290.8500

PROJECT NAME:
ST LUCIE WEST & SW CASHEMERE BLVD

PROJECT ADDRESS:
920 SW SAINT LUCIE BLVD,
PORT ST.LUCIE, FL 34986

STORE #:	81616
PROJECT #:	101357-001
ISSUE DATE:	06-27-2025
STORE DESIGNER:	ASHLEY SUEIRAS
DESIGN MANAGER:	GENSLER
ENGINEER OF RECORD:	KLH ENGINEERS

Revision Schedule

Rev	Date	By	Description

SHEET TITLE:
POWER PLAN

SCALE: AS SHOWN

SHEET NUMBER:
E101

9/4/2025 2:17:35 PM C:\Users\lheil\Documents\Revit\27472.00-23-MEP-SBX- Port St. St. Lucie, FL_lheil.rvt

LIGHTING FIXTURE SCHEDULE - "L"

DESIGN ID	COUNT	DESCRIPTION	FURN. BY	INST. BY	LAMP TYPE	COMMENTS	LOAD	VOLTAGE
12946	9	TRACK - WITH CONNECTORS - 4FT 122CM - BLACK - 1 CIRCUIT	SB	GC	N/A		0 VA	120 V
14355	9	SCONCE - MESH CYLINDER SMALL- BRONZE	SB	GC	LED		5 VA	120 V
15058	15	TRACK - WITH CONNECTORS - 6FT 183CM - BLACK - 1 CIRCUIT	SB	GC	N/A		0 VA	120 V
17796	8	LED STRING LIGHTS - 48FT 1463CM	SB	GC			23 VA	120 V
19047	2	LED EXIT SIGN WITH EMERGENCY LIGHT - BLACK AND GREEN	SB	GC	LED		4 VA	120 V
19050	2	LED EXIT SIGN RECESSED - ALUMINUM AND GREEN	SB	GC	LED		4 VA	120 V
19057	11	LED EMERGENCY LIGHT DOUBLE - BLACK	SB	GC	LED		4 VA	120 V
20661	4	PENDANT - ANDLIGHT SPOTLIGHT VOLUMES - BLACK	SB	GC		Combinations: C/A, C/C, B/C, C/A	30 VA	120 V
20739	3	SCONCE - KUZCO VEGA - 23IN 585MM - BLACK	SB	GC	LED		15 VA	120 V
20753	2	SCONCE - MATTEO BLINK - BLACK	SB	GC	LED		60 VA	120 V
20791	2	SCONCE - RBW PASTILLE VANITY - BLACK	SB	GC	LED		25 VA	120 V
21771	39	CAN - LED ADJUSTABLE RECESSED - 3IN 75MM - BLACK - 800LM FLOOD	SB	GC	LED		12 VA	120 V
21773	9	CAN - LED ADJUSTABLE RECESSED - 3IN 75MM - BLACK - 700LM WF	SB	GC	LED		12 VA	120 V
21779	40	TRACK - LED FIXTURE WITH SNOOT - 3IN 75MM - BLACK - 1100LM FLOOD	SB	GC	LED		14 VA	120 V
22215	6	STRIP - LED TAPE IN HOUSING - VARIABLE LENGTH - BLACK - 350LM PER FT	SB	GC	LED	FIELD TRIMMABLE TO 0.9IN LENGTHS(V.I.F): (1) 78"	0 VA	120 V
22217	3	STRIP - LED TAPE - VARIABLE LENGTH - 350LM PER FT	SB	GC	LED	FIELD TRIMMABLE TO 0.9IN LENGTHS(V.I.F): (1) 251", (1) 576"	0 VA	120 V
23055	7	TROFFER - LED RECESSED - 24X48IN 600X1200MM - WHITE - 2700K	SB	GC	LED		36 VA	120 V
24115	3	PENDANT - PENSEE - PEARL BROWN AND GOLD	SB	GC	LED		5 VA	120 V
X0601	4	CAN - LED ADJUSTABLE RECESSED - 3IN 75MM - BLACK - 1155LM FLOOD	SB	GC	LED	WITH DIMMER.	12 VA	120 V

LUMINAIRE GENERAL NOTES

A. DETAILS IN COMMENTS SECTION OF LUMINAIRE SCHEDULE SHALL APPLY IN ADDITION TO CATALOG SERIES.
B. LAMP, BALLAST AND TRANSFORMER INFORMATION IN SPECIFICATION SHALL APPLY IN ADDITION TO INFORMATION IN LUMINAIRE SCHEDULE.
C. REFER TO DRAWINGS FOR MOUNTING TYPE, NUMBER OF FACES AND ARROWS OF EXIT SIGNS.
D. VERIFY LUMINAIRE, LAMP AND VOLTAGE COMPATIBILITY.
E. THE CONTRACTOR SHALL BE RESPONSIBLE FOR COORDINATING EACH LUMINAIRE LOCATION WITH THE ARCHITECTURAL REFLECTED CEILING PLANS AND FOR VERIFYING AND PROVIDING THE MOUNTING SYSTEM REQUIRED FOR EACH LUMINAIRE. THE CONTRACTOR ALSO PROVIDE PLASTER FRAMES, WALL BRACKETS, SUPPORTS, OR OTHER APPURTENANCES AS REQUIRED FOR PROPER INSTALLATION.
F. CLEAN WHITE COTTON GLOVES SHALL BE WORN WHEN HANDLING THE LUMINAIRES' EXPOSED REFLECTIVE SURFACES. THE CONTRACTOR SHALL CLEAN ALL SURFACES, INCLUDING DUST, FINGERPRINTS, PAINT, ETC. WITH A CLEAN DRY CHEESECLOTH AFTER ALL INTERIOR WORK HAS BEEN COMPLETED. PLASTIC SHIPPING BAGS SHALL REMAIN ON THE LUMINAIRES UNTIL WORK IS COMPLETED.

ELECTRIC CURRENT LIMITER SCHEDULE

PROVIDE INTEGRAL CURRENT LIMITERS AS SPECIFIED IN THIS SCHEDULE FOR EACH CIRCUIT IN THIS SCHEDULE. ATTACH CURRENT LIMITER TO THE END OF THE TRACK. WHERE ONE CIRCUIT FEEDS MULTIPLE RUNS OF TRACK PROVIDE ALL ADDITIONAL END-FEEDS AND CONNECTORS NECCESSARY SO THAT A SINGLE CURRENT LIMITER FEEDS ALL TRACK SEGMENTS ON THAT CIRCUIT.

MANUFACTURER	VOLTAGE	FED FROM		CONNECTED LOAD	EXTRA CAPACITY (%)	RATING	LOAD NAME
		PANEL	CIRCUIT				
Contech	120 V	A	28	3.98 A	25	6.00 A	LTG CAFE 101-A
Contech	120 V	A	34	0.95 A	15	1.75 A	LTG OFFICE 107

STARBUCKS OWNER'S PROJECT REQUIREMENTS AND BASIS OF DESIGN

FOH		
CONTROLS	ON / OFF MANUAL WITH TIMECLOCK AUTO-OFF	
DAYLIGHT CONTROLS		
CONTROL	AS REQUIRED BY CODE	
WORKROOM / BOH		
CONTROL	OCCUPANCY W/ MANUAL ON	
TIME DELAY	20 MINUTES	
RESTROOM		
CONTROL	OCCUPANCY W/ MANUAL ON	
TIME DELAY	15 MINUTES	
INTERIOR SIGNAGE		
SCHEDULE	STORE OPEN TO CLOSE	
CONTROL	TIME CLOCK / EMS	
EXTERIOR SIGNAGE		
SCHEDULE	30 MINUTES BEFORE OPEN TO CLOSE	
CONTROL	PHOTOCELL / TIME CLOCK / EMS	
EXTERIOR LIGHTING		
SCHEDULE	TYPICAL: 60 MINUTES BEFORE OPEN TO 60 MINUTES AFTER CLOSING 24 HOUR STORE: DUSK TO DAWN	
CONTROL	PHOTOCELL / TIME CLOCK / EMS	

GENERAL NOTES

A. ALL FIXTURES IN WORK ROOM, BACK AND FRONT LINE, ABOVE CONDIMENT CART, AND ANY OTHER AREAS WHERE EXPOSED FOOD, CLEAN EQUIPMENT OR UTENSILS, OR UNWRAPPED SINGLE SERVICE ITEMS WILL BE EXPOSED, SHALL HAVE SHATTERPROOF LAMPS IF THE FIXTURE IS NOT LENSED. ARCHITECT OF RECORD TO INCLUDE APPROPRIATE LAMPS / FIXTURES ON DRAWINGS AND SCHEDULES, AND COMPLY WITH ANY ADDITIONAL JURISDICTIONAL LIGHTING REQUIREMENT.

B. PROVIDE GROMMET AT ALL CEILING PENETRATIONS FOR FIXTURES/SUPPORTS.

C. CENTER EMERGENCY/EXIT LIGHTS ABOVE DOORS, UNLESS OTHERWISE NOTED.

D. ADJUST FOCUS OF ALL TRACK AND RECESSED DIRECTIONAL LIGHTING TO FULLY ILLUMINATE ALL ARTWORK, MENU BOARDS, AND MERCHANDISE BAYS.

E. IF PENDANT CYLINDERS CAN SUSPENDED LENGTH EXCEEDS 48" (1220MM) FROM CEILING, REPLACE WITH SURFACE MOUNTED CYLINDER CANS AND SUSPEND WITH GENERAL CONTRACTOR SUPPLIED CONDUIT AND J-BOX TO DIMENSIONED HEIGHT.

KEYED NOTES

L1 LOCATION OF LIGHT SWITCH BANK. REFER TO SWITCH BANK DETAIL FOR QUANTITIES AND TYPES OF SWITCHES.

L2 PROVIDE (1) 96W LED DRIVER FOR EVERY 20' OF TAPE LIGHTING. MOUNT DRIVE IN VENTED, ACCESSIBLE SPACE. COORDINATE EXACT LOCATION WITH SBX PM PRIOR TO ROUGH IN.

L7 EXISTING LANDLORD INSTALLED EMERGENCY EGRESS LIGHTING TO REMAIN.

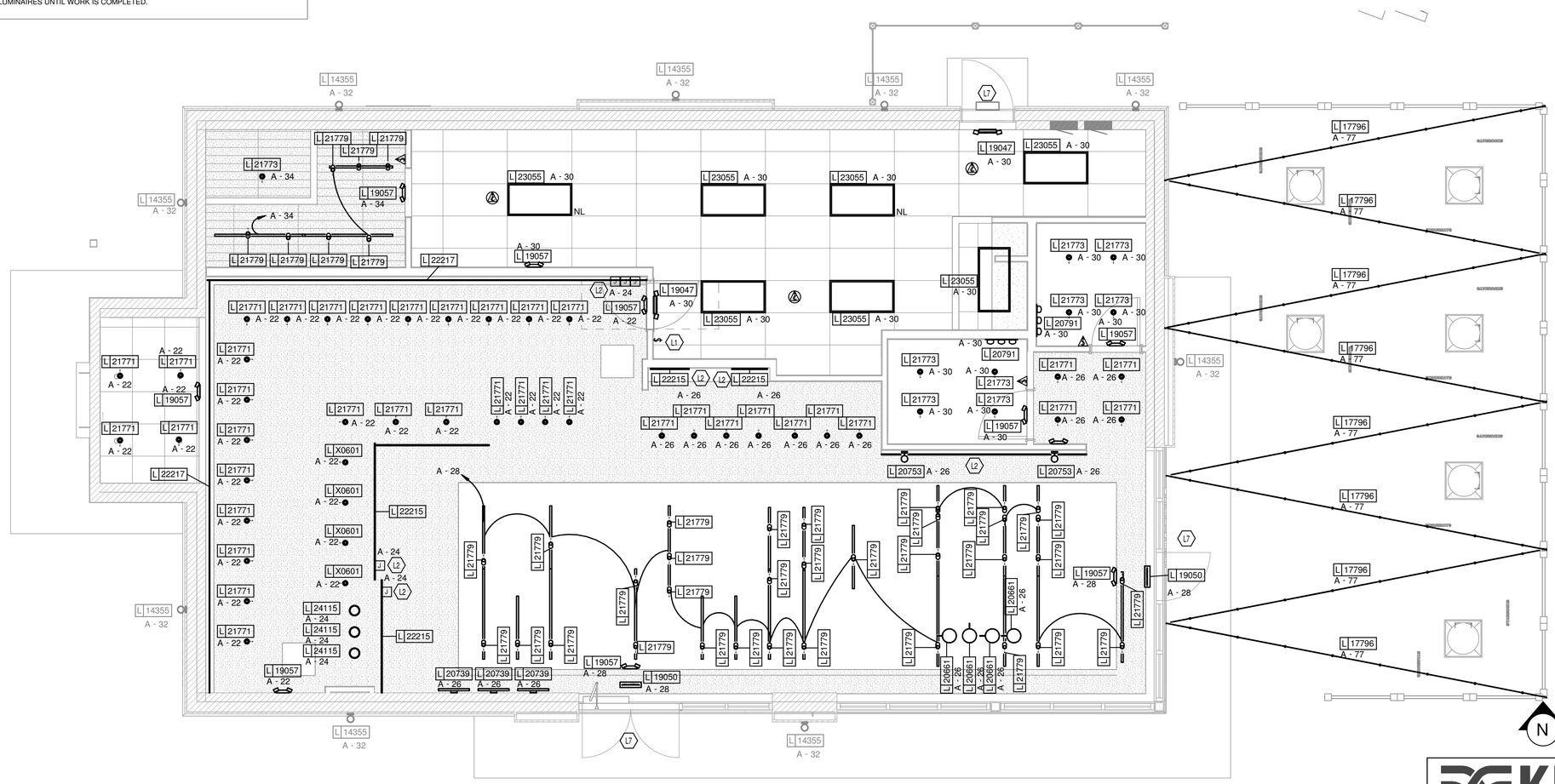

1 ELECTRIC LIGHTING PLAN
1/4" = 1'-0"

KLH ENGINEERS
MECHANICAL/ELECTRICAL ENGINEERS
WWW.KLHENGRS.COM
KOHRS LONNEMANN HEIL ENGINEERS, INC.
444 SOUTH FRONT STREET
COLUMBUS, OHIO 43215
800-354-9783 614-228-2180
614-228-2183 FAX
FORT THOMAS, KENTUCKY
LEXINGTON, KENTUCKY
LOUISVILLE, KENTUCKY
NEW YORK, NEW YORK

PERMIT SET - FOR CONSTRUCTION

© 2022 STARBUCKS COFFEE COMPANY

STARBUCKS COFFEE COMPANY
2401 UTAH AVENUE SOUTH
SEATTLE, WASHINGTON 98134
(206) 318-1575

THESE DRAWINGS AND PROJECT MANUAL ARE CONFIDENTIAL AND SHALL REMAIN THE SOLE PROPERTY OF STARBUCKS CORPORATION, WHICH IS THE OWNER OF THE COPYRIGHT IN THIS WORK. THEY SHALL NOT BE REPRODUCED (IN WHOLE OR IN PART), SHARED WITH THIRD PARTIES OR USED IN ANY MANNER ON OTHER PROJECTS OR EXTENSIONS TO THIS PROJECT WITHOUT THE PRIOR WRITTEN CONSENT OF STARBUCKS CORPORATION. THESE DRAWINGS AND SPECIFICATIONS ARE INTENDED TO EXPRESS DESIGN INTENT FOR A PROTOTYPICAL STARBUCKS STORE (WHICH IS SUBJECT TO CHANGE AT ANYTIME) AND DO NOT REFLECT ACTUAL SITE CONDITIONS. NEITHER PARTY SHALL HAVE ANY OBLIGATION NOR LIABILITY TO THE OTHER (EXCEPT STATED ABOVE) UNTIL A WRITTEN AGREEMENT IS FULLY EXECUTED BY BOTH PARTIES.

STARBUCKS TEMPLATE VERSION i2022.10.23

Gensler
MAIN OFFICE
M. ARTHUR GENSLER JR. & ASSOCIATES
FL QUALIFIER'S LIC. NO. AR96486
45 FREMONT ST, SUITE 1500
SAN FRANCISCO, CA 94105 USA
Tel (415) 433.3700
Fax (415) 836.4599
SATELLITE OFFICE
10 NORTH PARK PLACE
SUITE 400
MORRISTOWN, NJ 07960 USA
Tel (973) 290.8500

PROJECT NAME:
ST LUCIE WEST & SW
CASHEMERE BLVD

PROJECT ADDRESS:
920 SW SAINT LUCIE BLVD,
PORT ST.LUCIE, FL 34986

STORE #:	81616
PROJECT #:	101357-001
ISSUE DATE:	06-27-2025
STORE DESIGNER:	ASHLEY SUEIRAS
DESIGN MANAGER:	GENSLER
ENGINEER OF RECORD:	KLH ENGINEERS

Revision Schedule

Rev	Date	By	Description

SHEET TITLE:
LIGHTING PLAN

SCALE: AS SHOWN

SHEET NUMBER:
E102

9/4/2025 2:17:44 PM C:\Users\lheil\Documents\Revit\27472.00-23-MEP-SBX- Port St. St. Lucie, FL_lheil.rvt

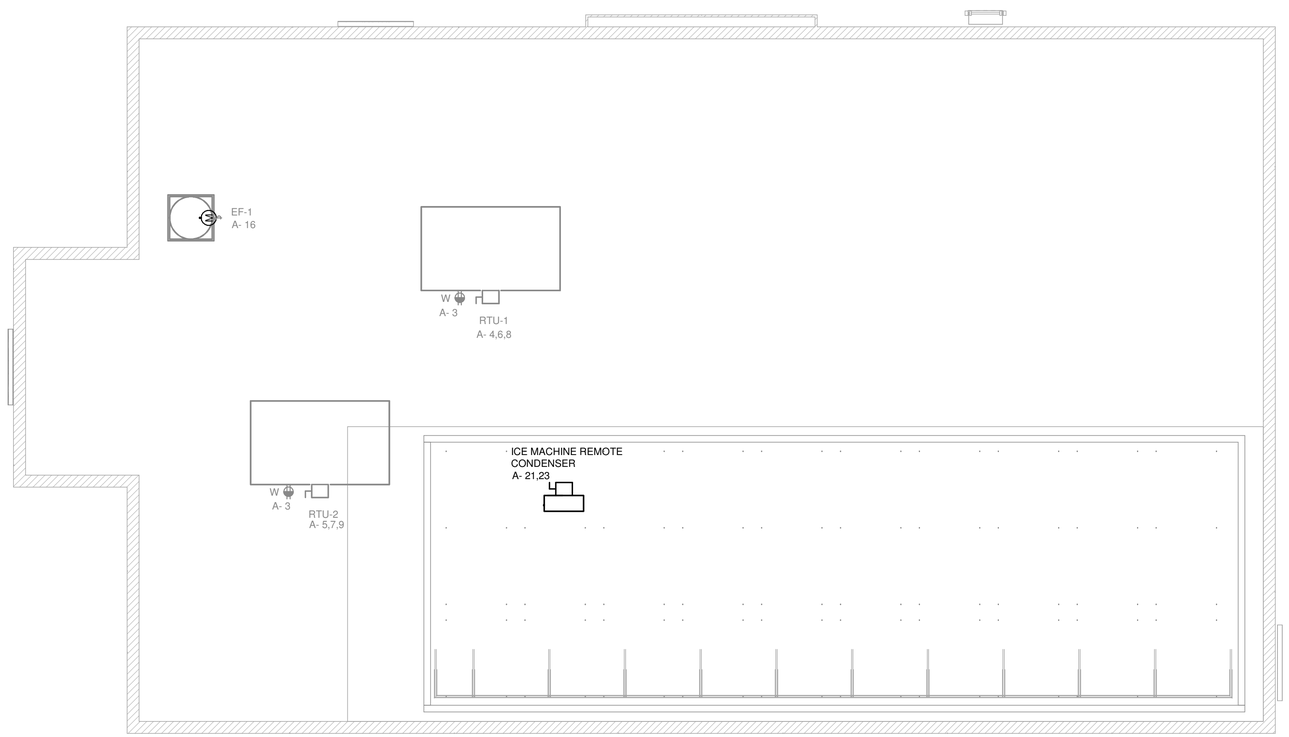

1 ELECTRIC POWER PLAN - ROOF
1/4" = 1'-0"

N

0 2' 4' 8'
Scale: 1/4" = 1'-0"

KLH ENGINEERS
MECHANICAL/ELECTRICAL ENGINEERS
WWW.KLHENGRS.COM
KOHRS LONNEMANN HEIL ENGINEERS, INC.
444 SOUTH FRONT STREET
COLUMBUS, OHIO 43215
800-354-9783 614-228-2180
614-228-2183 FAX
FORT THOMAS, KENTUCKY
LEXINGTON, KENTUCKY
LOUISVILLE, KENTUCKY
NEW YORK, NEW YORK

PERMIT SET - FOR CONSTRUCTION

© 2022 STARBUCKS COFFEE COMPANY

STARBUCKS COFFEE COMPANY
2401 UTAH AVENUE SOUTH
SEATTLE, WASHINGTON 98134
(206) 318-1575

THESE DRAWINGS AND PROJECT MANUAL ARE CONFIDENTIAL AND SHALL REMAIN THE SOLE PROPERTY OF STARBUCKS CORPORATION, WHICH IS THE OWNER OF THE COPYRIGHT IN THIS WORK. THEY SHALL NOT BE REPRODUCED (IN WHOLE OR IN PART), SHARED WITH THIRD PARTIES OR USED IN ANY MANNER ON OTHER PROJECTS OR EXTENSIONS TO THIS PROJECT WITHOUT THE PRIOR WRITTEN CONSENT OF STARBUCKS CORPORATION. THESE DRAWINGS AND SPECIFICATIONS ARE INTENDED TO EXPRESS DESIGN INTENT FOR A PROTOTYPICAL STARBUCKS STORE (WHICH IS SUBJECT TO CHANGE AT ANYTIME) AND DO NOT REFLECT ACTUAL SITE CONDITIONS. NEITHER PARTY SHALL HAVE ANY OBLIGATION NOR LIABILITY TO THE OTHER (EXCEPT STATED ABOVE) UNTIL A WRITTEN AGREEMENT IS FULLY EXECUTED BY BOTH PARTIES.

STARBUCKS TEMPLATE VERSION i2022.10.23

Gensler
MAIN OFFICE
M. ARTHUR GENSLER JR. & ASSOCIATES
FL QUALIFIER'S LIC. NO. AR96486
45 FREMONT ST, SUITE 1500
SAN FRANCISCO, CA 94105 USA
Tel (415) 433.3700
Fax (415) 836.4599
SATELLITE OFFICE
10 NORTH PARK PLACE
SUITE 400
MORRISTOWN, NJ 07960 USA
Tel (973) 290.8500

PROJECT NAME:
ST LUCIE WEST & SW CASHEMERE BLVD

PROJECT ADDRESS:
920 SW SAINT LUCIE BLVD,
PORT ST.LUCIE, FL 34986

STORE #:	81616
PROJECT #:	101357-001
ISSUE DATE:	06-27-2025
STORE DESIGNER:	ASHLEY SUEIRAS
DESIGN MANAGER:	GENSLER
ENGINEER OF RECORD:	KLH ENGINEERS

Revision Schedule

Rev	Date	By	Description

SHEET TITLE:
ELECTRICAL ROOF PLAN
SCALE: AS SHOWN

SHEET NUMBER:
E103

9/4/2025 2:17:46 PM C:\Users\lheil\Documents\Revit\27472.00-23-MEP-SBX- Port St. St. Lucie, FL_lheil.rvt

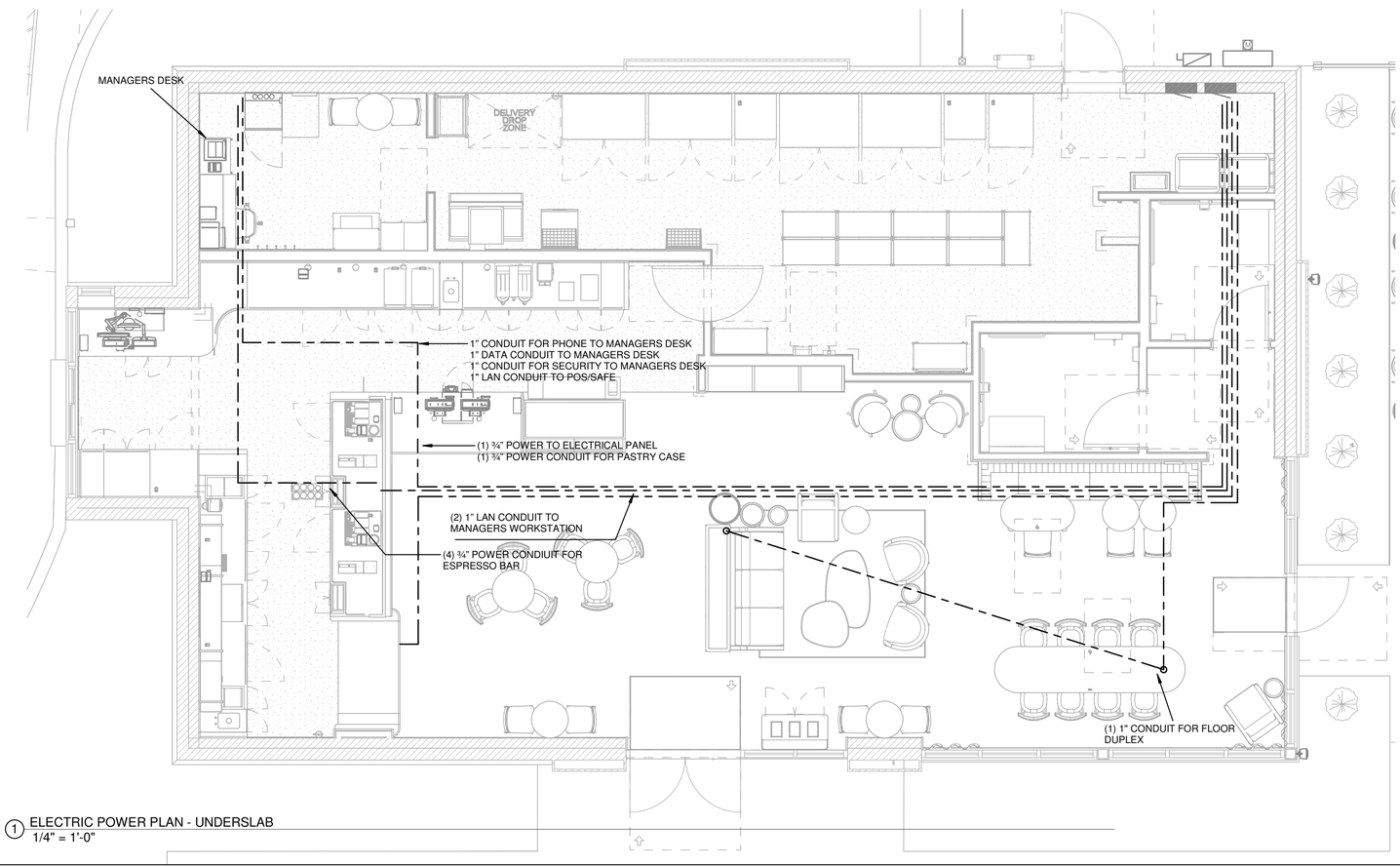

1 ELECTRIC POWER PLAN - UNDERSLAB
1/4" = 1'-0"

N

0 2' 4' 8'
Scale: 1/4" = 1'-0"

KLH ENGINEERS
MECHANICAL/ELECTRICAL ENGINEERS
WWW.KLHENGRS.COM
KOHRS LONNEMANN HEIL ENGINEERS, INC.
444 SOUTH FRONT STREET
COLUMBUS, OHIO 43215
800-354-9783 614-228-2180
614-228-2183 FAX
FORT THOMAS, KENTUCKY
LEXINGTON, KENTUCKY
LOUISVILLE, KENTUCKY
NEW YORK, NEW YORK

PERMIT SET - FOR CONSTRUCTION

© 2022 STARBUCKS COFFEE COMPANY

STARBUCKS COFFEE COMPANY
2401 UTAH AVENUE SOUTH
SEATTLE, WASHINGTON 98134
(206) 318-1575

THESE DRAWINGS AND PROJECT MANUAL ARE CONFIDENTIAL AND SHALL REMAIN THE SOLE PROPERTY OF STARBUCKS CORPORATION, WHICH IS THE OWNER OF THE COPYRIGHT IN THIS WORK. THEY SHALL NOT BE REPRODUCED (IN WHOLE OR IN PART), SHARED WITH THIRD PARTIES OR USED IN ANY MANNER ON OTHER PROJECTS OR EXTENSIONS TO THIS PROJECT WITHOUT THE PRIOR WRITTEN CONSENT OF STARBUCKS CORPORATION. THESE DRAWINGS AND SPECIFICATIONS ARE INTENDED TO EXPRESS DESIGN INTENT FOR A PROTOTYPICAL STARBUCKS STORE (WHICH IS SUBJECT TO CHANGE AT ANYTIME) AND DO NOT REFLECT ACTUAL SITE CONDITIONS. NEITHER PARTY SHALL HAVE ANY OBLIGATION NOR LIABILITY TO THE OTHER (EXCEPT STATED ABOVE) UNTIL A WRITTEN AGREEMENT IS FULLY EXECUTED BY BOTH PARTIES.

STARBUCKS TEMPLATE VERSION |2022.10.23

Gensler
MAIN OFFICE
M. ARTHUR GENSLER JR. & ASSOCIATES
FL QUALIFIER'S LIC. NO. AR96486
45 FREMONT ST, SUITE 1500
SAN FRANCISCO, CA 94105 USA
Tel (415) 433.3700
Fax (415) 836.4599
SATELLITE OFFICE
10 NORTH PARK PLACE
SUITE 400
MORRISTOWN, NJ 07960 USA
Tel (973) 290.8500

PROJECT NAME:
ST LUCIE WEST & SW CASHEMERE BLVD

PROJECT ADDRESS:
920 SW SAINT LUCIE BLVD,
PORT ST.LUCIE, FL 34986

STORE #:	81616
PROJECT #:	101357-001
ISSUE DATE:	06-27-2025
STORE DESIGNER:	ASHLEY SUEIRAS
DESIGN MANAGER:	GENSLER
ENGINEER OF RECORD:	KLH ENGINEERS

Revision Schedule

Rev	Date	By	Description

SHEET TITLE:
ELECTRICAL UNDERSLAB PLAN
SCALE: AS SHOWN

SHEET NUMBER:
E104

9/4/2025 2:17:50 PM C:\Users\lheil\Documents\Revit\274472.00-23-MEP-SBX- Port St. St. Lucie, FL_lheil.rvt

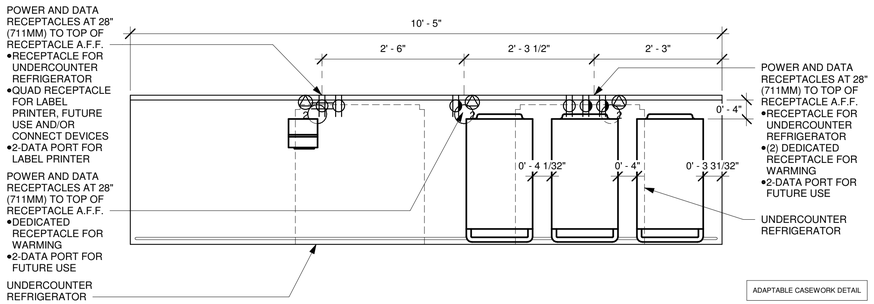

8 WRM 17-03 ELECTRICAL
3/4" = 1'-0"

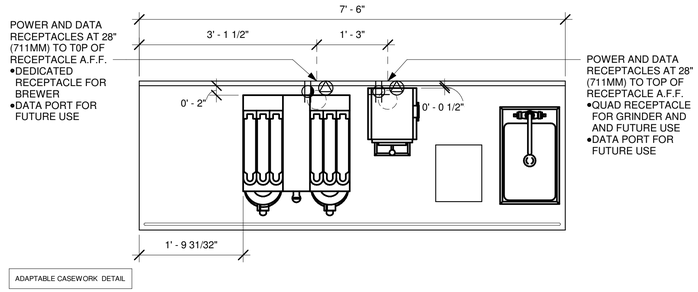

5 BRW 09-01 ELECTRICAL
3/4" = 1'-0"

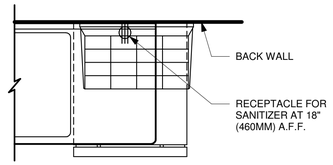

2 SANITIZING WORKSTATION - ELECTRICAL
3/4" = 1'-0"

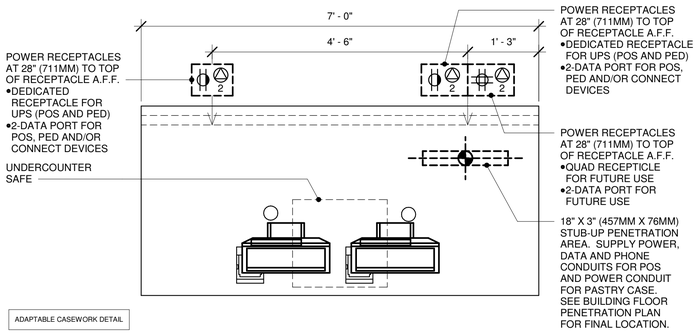

9 POS 05-01 ELECTRICAL
3/4" = 1'-0"

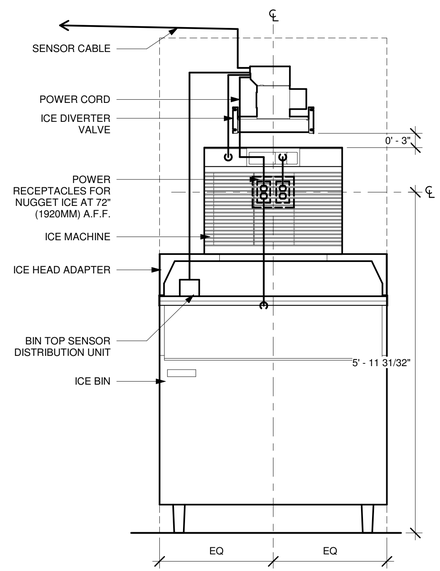

ELEVATION - ELECTRICAL DIAGRAM

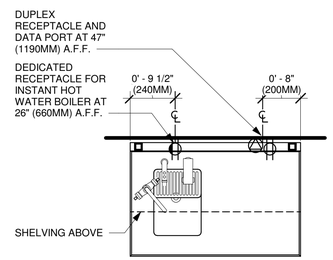

3 WATER FILLING STATION - ELECTRICAL
3/4" = 1'-0"

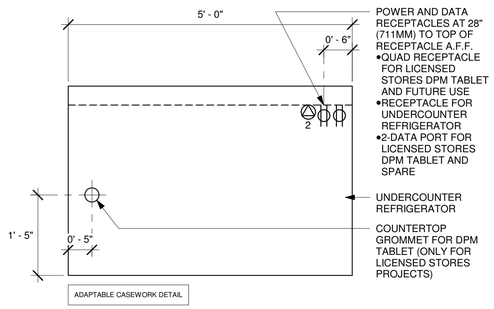

7 HOS 03-01 ELECTRICAL
3/4" = 1'-0"

ELECTRICAL SYMBOL LEGEND - DETAILS ONLY

J	JUNCTON BOX		RECEPTACLE: DUPLEX
$	SWITCH		RECEPTACLE: DUPLEX - INDIVIDUAL BRANCH CIRCUIT
$3	THREE-WAY SWITCH		RECEPTACLE: QUAD
$M	MOTION (OCCUPANCY) SENSOR SWITCH		RECEPTACLE: QUAD - INDIVIDUAL BRANCH CIRCUIT
S	SWITCHBACK		RECEPTACLE: HIGH VOLTAGE
	TELEPHONE		RECEPTACLE: FLOOR DUPLEX
T	THERMOSTAT		GROUNDING ELECTRODE CONNECTION
S	THERMOSTAT SENSOR	NL	NIGHTLIGHTING 24HR/DAY
	DIMMER SWITCH	PE	PHOTOELECTRIC CELL
	RECEPTACLE: DATA		SPEAKER

RACEWAY CONCEALED IN CEILING OR WALL.
HASH MARKS INDICATE NUMBER OF WIRES.
#12 AWG WIRE UNLESS OTHERWISE NOTED.
TWO WIRES PLUS GROUND IF NO HASH MARKS SHOWN.
LONG HASH MARK DENOTES NEUTRAL.
GROUND WIRE NOT SHOWN.

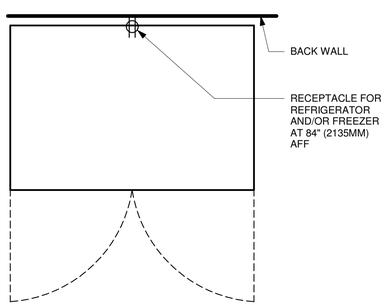

6 REFRIGERATOR/FREEZER - ELECTRICAL
3/4" = 1'-0"

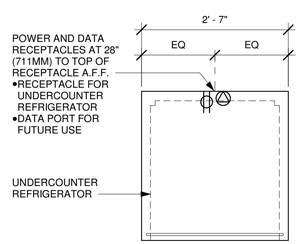

4 ADD-ON REFRIGERTOR ELECTRICAL
3/4" = 1'-0"

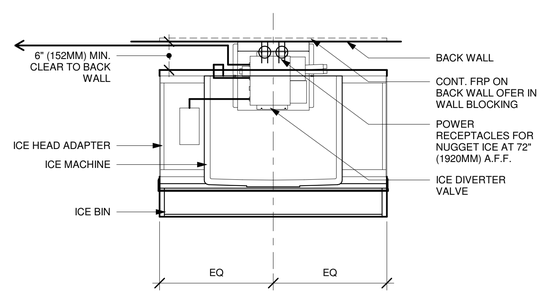

PLAN - ELECTRICAL DIAGRAM

10 ELECTRICAL - NUGGET ICE
3/4" = 1'-0"

KLH ENGINEERS
MECHANICAL/ELECTRICAL ENGINEERS
WWW.KLHENGRS.COM
KOHRS LONNEMANN HEIL ENGINEERS, INC.
444 SOUTH FRONT STREET
COLUMBUS, OHIO 43215
800-354-9793 614-228-2180
614-228-2183 FAX
FORT THOMAS, KENTUCKY
LEXINGTON, KENTUCKY
LOUISVILLE, KENTUCKY
NEW YORK, NEW YORK

PERMIT SET - FOR CONSTRUCTION

© 2022 STARBUCKS COFFEE COMPANY

STARBUCKS COFFEE COMPANY
2401 UTAH AVENUE SOUTH
SEATTLE, WASHINGTON 98134
(206) 318-1575

THESE DRAWINGS AND PROJECT MANUAL ARE CONFIDENTIAL AND SHALL REMAIN THE SOLE PROPERTY OF STARBUCKS CORPORATION, WHICH IS THE OWNER OF THE COPYRIGHT IN THIS WORK. THEY SHALL NOT BE REPRODUCED (IN WHOLE OR IN PART), SHARED WITH THIRD PARTIES OR USED IN ANY MANNER ON OTHER PROJECTS OR EXTENSIONS TO THIS PROJECT WITHOUT THE PRIOR WRITTEN CONSENT OF STARBUCKS CORPORATION. THESE DRAWINGS AND SPECIFICATIONS ARE INTENDED TO EXPRESS DESIGN INTENT FOR A PROTOTYPICAL STARBUCKS STORE (WHICH IS SUBJECT TO CHANGE AT ANYTIME) AND DO NOT REFLECT ACTUAL SITE CONDITIONS. NEITHER PARTY SHALL HAVE ANY OBLIGATION NOR LIABILITY TO THE OTHER (EXCEPT STATED ABOVE) UNTIL A WRITTEN AGREEMENT IS FULLY EXECUTED BY BOTH PARTIES.

STARBUCKS TEMPLATE VERSION i2022.10.23

Gensler
MAIN OFFICE
M. ARTHUR GENSLER JR. & ASSOCIATES
FL QUALIFIER'S LIC. NO. AR96486
45 FREMONT ST., SUITE 1500
SAN FRANCISCO, CA 94105 USA
Tel (415) 433.3700
Fax (415) 836.4599
SATELLITE OFFICE
10 NORTH PARK PLACE
SUITE 400
MORRISTOWN, NJ 07960 USA
Tel (973) 290.8500

PROJECT NAME:
ST LUCIE WEST & SW CASHEMERE BLVD

PROJECT ADDRESS:
920 SW SAINT LUCIE BLVD,
PORT ST.LUCIE, FL 34986

STORE #: 81616
PROJECT #: 101357-001
ISSUE DATE: 06-27-2025
STORE DESIGNER:
DESIGN MANAGER: ASHLEY SUEIRAS
ENGINEER OF RECORD: GENSLER KLH ENGINEERS

Revision Schedule

Rev	Date	By	Description

SHEET TITLE:
ELECTRICAL DETAILS

SCALE: AS SHOWN

SHEET NUMBER:
E501

9/4/2025 2:17:52 PM C:\Users\lheil\Documents\Revit\27472.00-23-MEP-SBX- Port St. St. Lucie, FL_lheil.rvt

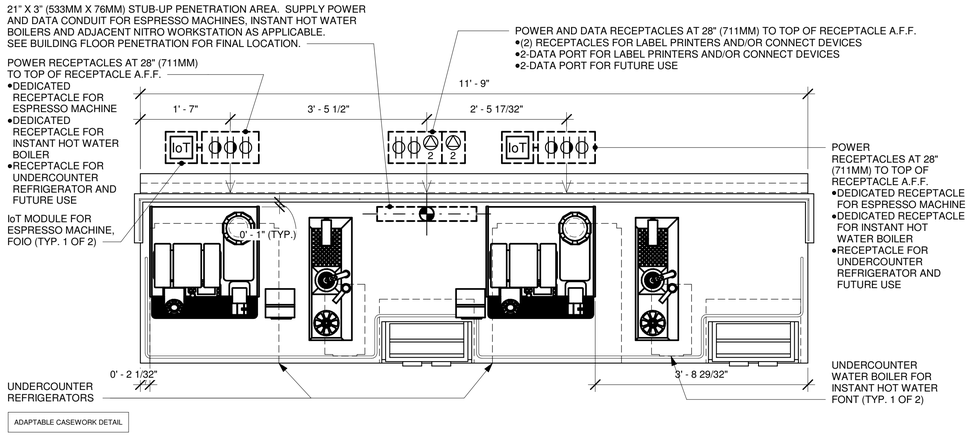

3 ESP 04-02 ELECTRICAL
3/4" = 1'-0"

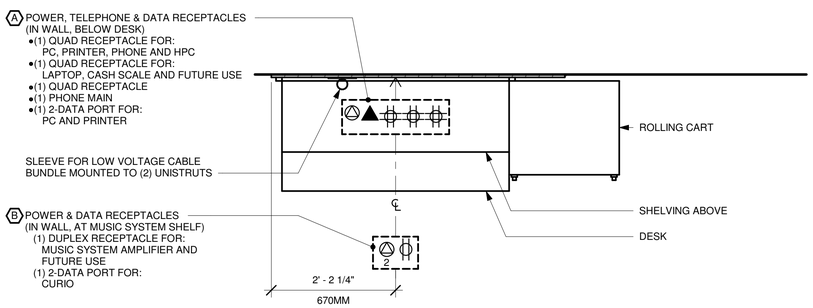

PLAN VIEW

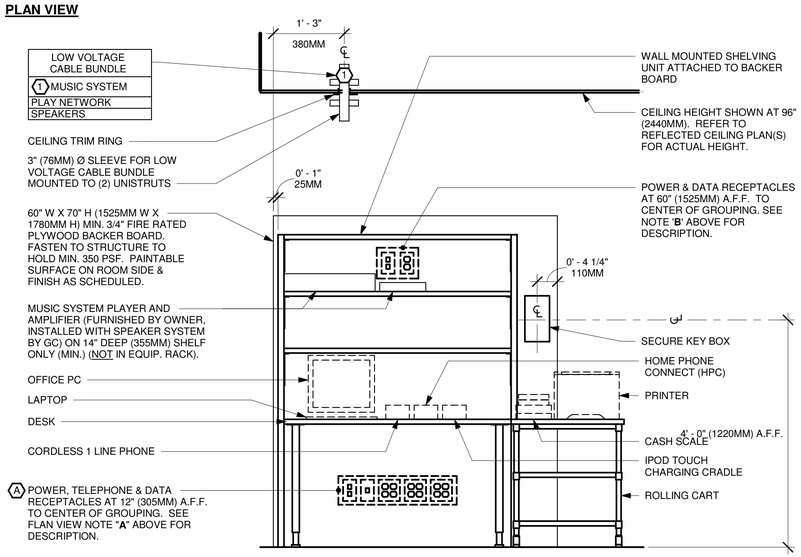

ELEVATION VIEW

4 MANAGER DESK (NEW) - RIGHT- ELECTRICAL
3/4" = 1'-0"

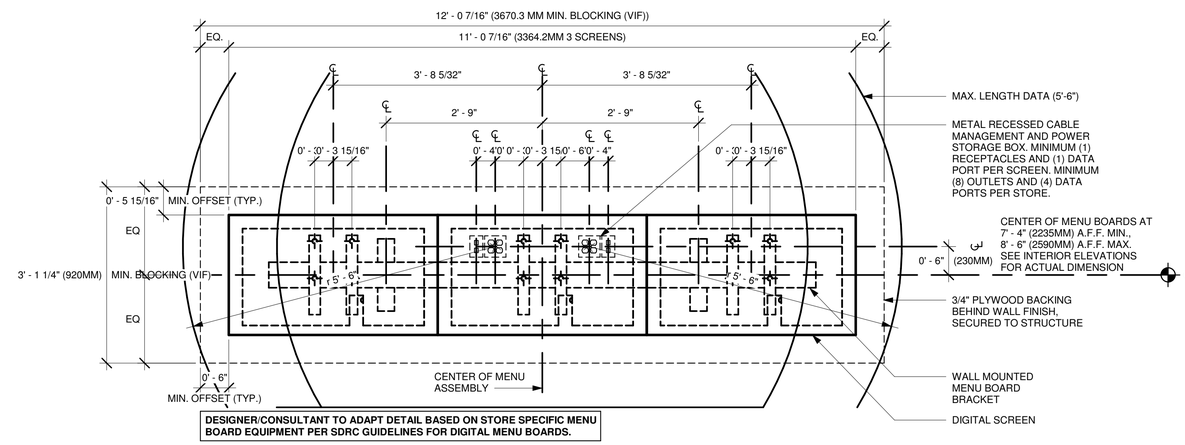

2 DIGITAL MENU BOARDS - STANDARD MOUNT
3/4" = 1'-0"

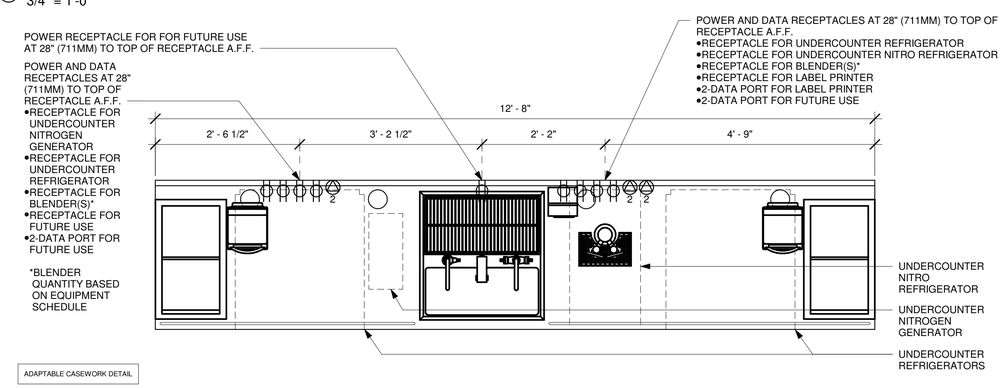

1 CBE 14-02 ELECTRICAL
3/4" = 1'-0"

KLH ENGINEERS
MECHANICAL/ELECTRICAL ENGINEERS
WWW.KLHENGRS.COM
KOHRS LONNEMANN HEIL ENGINEERS, INC.
444 SOUTH FRONT STREET
COLUMBUS, OHIO 43215
800-354-9783 614-228-2180
614-228-2183 FAX
FORT THOMAS, KENTUCKY
LEXINGTON, KENTUCKY
LOUISVILLE, KENTUCKY
NEW YORK, NEW YORK

PERMIT SET - FOR CONSTRUCTION

© 2022 STARBUCKS COFFEE COMPANY

STARBUCKS COFFEE COMPANY
2401 UTAH AVENUE SOUTH
SEATTLE, WASHINGTON 98134
(206) 318-1575

THESE DRAWINGS AND PROJECT MANUAL ARE CONFIDENTIAL AND SHALL REMAIN THE SOLE PROPERTY OF STARBUCKS CORPORATION, WHICH IS THE OWNER OF THE COPYRIGHT IN THIS WORK. THEY SHALL NOT BE REPRODUCED (IN WHOLE OR IN PART), SHARED WITH THIRD PARTIES OR USED IN ANY MANNER ON OTHER PROJECTS OR EXTENSIONS TO THIS PROJECT WITHOUT THE PRIOR WRITTEN CONSENT OF STARBUCKS CORPORATION. THESE DRAWINGS AND SPECIFICATIONS ARE INTENDED TO EXPRESS DESIGN INTENT FOR A PROTOTYPICAL STARBUCKS STORE (WHICH IS SUBJECT TO CHANGE AT ANYTIME) AND DO NOT REFLECT ACTUAL SITE CONDITIONS. NEITHER PARTY SHALL HAVE ANY OBLIGATION NOR LIABILITY TO THE OTHER (EXCEPT STATED ABOVE) UNTIL A WRITTEN AGREEMENT IS FULLY EXECUTED BY BOTH PARTIES.

STARBUCKS TEMPLATE VERSION i2022.10.23

Gensler
MAIN OFFICE
M. ARTHUR GENSLER JR. & ASSOCIATES
FL QUALIFIER'S LIC. NO. AR96486
45 FREMONT ST, SUITE 1500
SAN FRANCISCO, CA 94105 USA
Tel (415) 433.3700
Fax (415) 836.4599
SATELLITE OFFICE
10 NORTH PARK PLACE
SUITE 400
MORRISTOWN, NJ 07960 USA
Tel (973) 290.8500

PROJECT NAME:
ST LUCIE WEST & SW CASHEMERE BLVD

PROJECT ADDRESS:
920 SW SAINT LUCIE BLVD,
PORT ST.LUCIE, FL 34986

STORE #: 81616
PROJECT #: 101357-001
ISSUE DATE: 06-27-2025
STORE DESIGNER: ASHLEY SUEIRAS
DESIGN MANAGER: GENSLER
ENGINEER OF RECORD: KLH ENGINEERS

Revision Schedule

Rev	Date	By	Description

SHEET TITLE:
ELECTRICAL DETAILS

SCALE: AS SHOWN

SHEET NUMBER:
E502

9/4/2025 2:17:53 PM C:\Users\lheil\Documents\Revit\27472.00-23-MEP-SBX- Port St. St. Lucie, FL_lheil.rvt

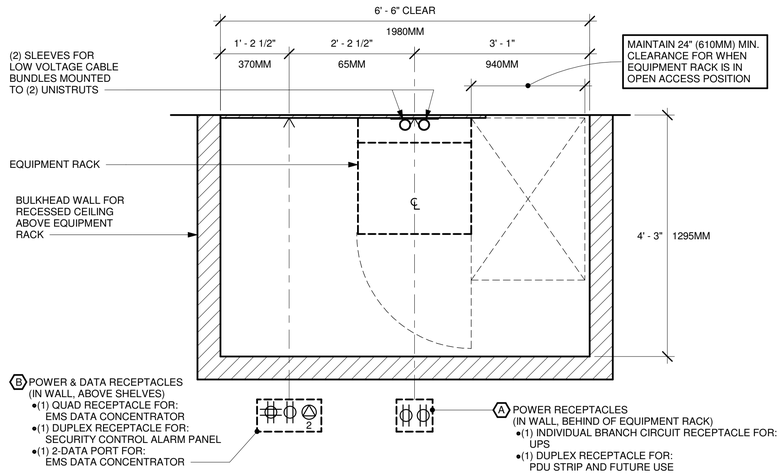

PLAN VIEW

LOW VOLTAGE CABLE BUNDLES	
1 SECURITY	2 POS
SECURITY PANEL	HIGH SPEED INTERNET
FUTURE USE	DEMARC EXTENSION
	POS LAN
	DT TIMER

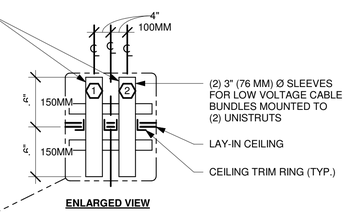

ENLARGED VIEW

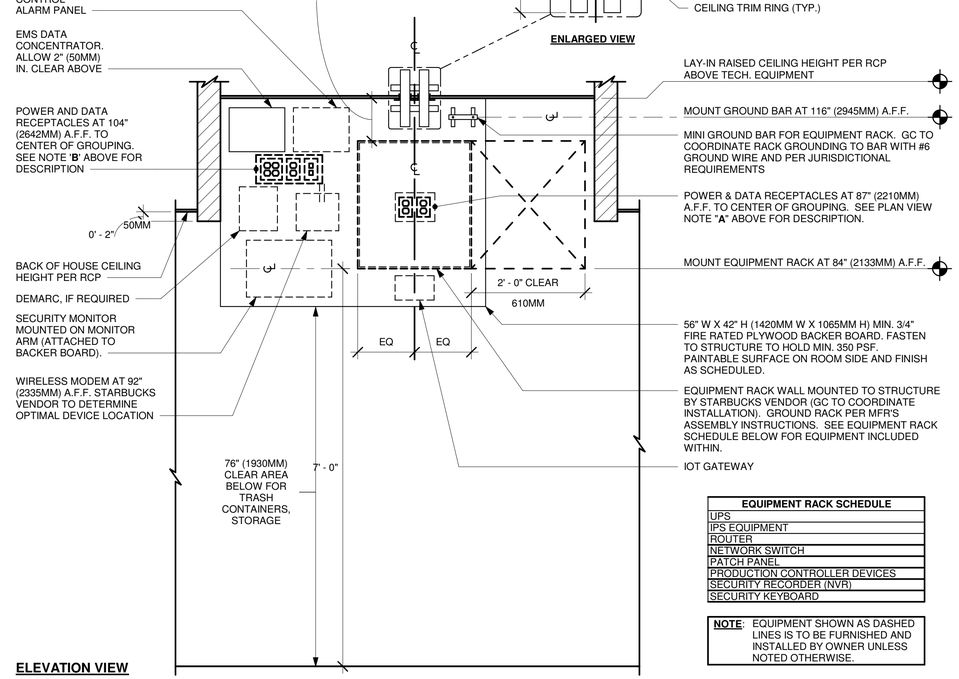

EQUIPMENT RACK SCHEDULE
UPS
IPS EQUIPMENT
ROUTER
NETWORK SWITCH
PATCH PANEL
PRODUCTION CONTROLLER DEVICES
SECURITY RECORDER (NVR)
SECURITY KEYBOARD

NOTE: EQUIPMENT SHOWN AS DASHED LINES IS TO BE FURNISHED AND INSTALLED BY OWNER UNLESS NOTED OTHERWISE.

ELEVATION VIEW

2 EQUIPMENT RACK RIGHT - ELECTRICAL
3/4" = 1'-0"

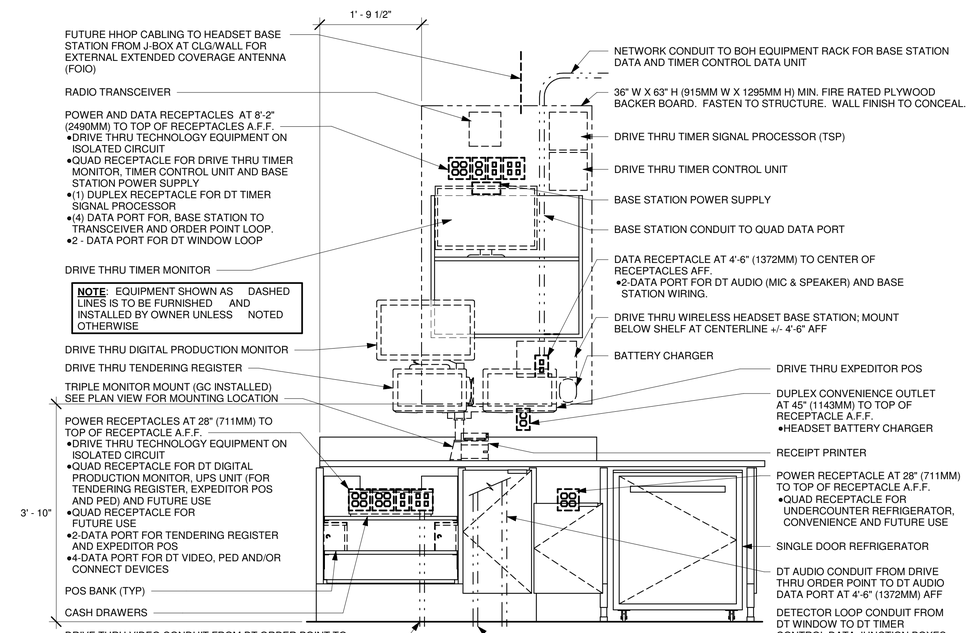

ELEVATION VIEW

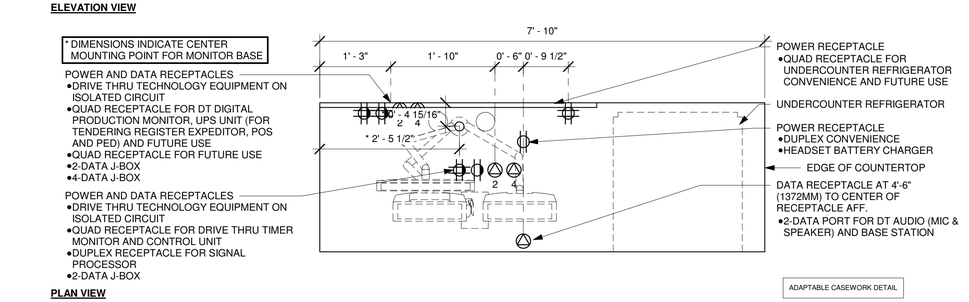

PLAN VIEW

1 POS 08-03 ELECTRICAL
3/4" = 1'-0"

KLH ENGINEERS
MECHANICAL/ELECTRICAL ENGINEERS
WWW.KLHENGRS.COM
KOHRS LONNEMANN HEIL ENGINEERS, INC.
444 SOUTH FRONT STREET
COLUMBUS, OHIO 43215
800-354-9783 614-228-2180
614-228-2183 FAX
FORT THOMAS, KENTUCKY
LEXINGTON, KENTUCKY
LOUISVILLE, KENTUCKY
NEW YORK, NEW YORK

PERMIT SET - FOR CONSTRUCTION

© 2022 STARBUCKS COFFEE COMPANY

STARBUCKS COFFEE COMPANY
2401 UTAH AVENUE SOUTH
SEATTLE, WASHINGTON 98134
(206) 318-1575

THESE DRAWINGS AND PROJECT MANUAL ARE CONFIDENTIAL AND SHALL REMAIN THE SOLE PROPERTY OF STARBUCKS CORPORATION, WHICH IS THE OWNER OF THE COPYRIGHT IN THIS WORK. THEY SHALL NOT BE REPRODUCED (IN WHOLE OR IN PART), SHARED WITH THIRD PARTIES OR USED IN ANY MANNER ON OTHER PROJECTS OR EXTENSIONS TO THIS PROJECT WITHOUT THE PRIOR WRITTEN CONSENT OF STARBUCKS CORPORATION. THESE DRAWINGS AND SPECIFICATIONS ARE INTENDED TO EXPRESS DESIGN INTENT FOR A PROTOTYPICAL STARBUCKS STORE (WHICH IS SUBJECT TO CHANGE AT ANYTIME) AND DO NOT REFLECT ACTUAL SITE CONDITIONS. NEITHER PARTY SHALL HAVE ANY OBLIGATION NOR LIABILITY TO THE OTHER (EXCEPT STATED ABOVE) UNTIL A WRITTEN AGREEMENT IS FULLY EXECUTED BY BOTH PARTIES.

STARBUCKS TEMPLATE VERSION i2022.10.23

Gensler
MAIN OFFICE
M. ARTHUR GENSLER JR. & ASSOCIATES
FL QUALIFIER'S LIC. NO. AR96486
45 FREMONT ST, SUITE 1500
SAN FRANCISCO, CA 94105 USA
Tel (415) 433.3700
Fax (415) 836.4599
SATELLITE OFFICE
10 NORTH PARK PLACE
SUITE 400
MORRISTOWN, NJ 07960 USA
Tel (973) 290.8500

PROJECT NAME:
ST LUCIE WEST & SW
CASHEMERE BLVD

PROJECT ADDRESS:
920 SW SAINT LUCIE BLVD,
PORT ST.LUCIE, FL 34986

STORE #: 81616
PROJECT #: 101357-001

ISSUE DATE: 06-27-2025

STORE DESIGNER: ASHLEY SUEIRAS
DESIGN MANAGER: GENSLER
ENGINEER OF RECORD: KLH ENGINEERS

Revision Schedule			
Rev	Date	By	Description

SHEET TITLE:
ELECTRICAL DETAILS

SCALE: AS SHOWN

SHEET NUMBER:
E503

9/4/2025 2:17:55 PM C:\Users\lheil\Documents\Revit\27472.00-23-MEP-SBX- Port St. St. Lucie, FL_lheil.rvt

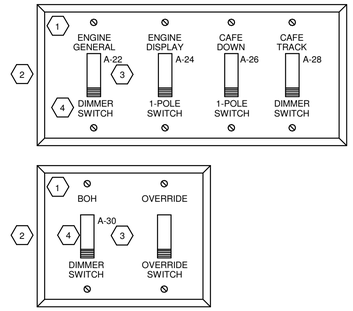

KEYED NOTES:

1. PROVIDE ENGRAVED DESCRIPTION WITH BLACK REVEAL & +/- 3/16" HIGH LETTERING (TYPICAL).
2. SEE SPECIFICATIONS FOR WALL PLATE MATERIAL, STYLE AND TYPE (TYPICAL).
3. SWITCHING DESIGNATION (TYPICAL - SHOWN FOR REFERENCE ONLY, NOT TO BE ENGRAVED).
4. TYPE OF SWITCH (TYPICAL - SHOWN FOR REFERENCE ONLY, NOT TO BE ENGRAVED).
5. PROVIDE MASTER OVERRIDE SWITCH.

LIGHTING SWITCH BANK WALL PLATE DETAIL

SCALE: NONE

CONTACTOR SCHEDULE

NOTES:
1) PROVIDE A MINIMUM OF (2) SPARE CONTACTS IN EACH CONTACTOR UNLESS NOTED OTHERWISE.
2) REFER TO SPECIFICATIONS FOR ADDITIONAL INFORMATION.
3) CONTACTOR DESIGNATIONS DO NOT INDICATE QUANTITY OF CONTACTORS, THEY INDICATE CONTACTOR GROUPING(S) AND COMMON CONTROL METHODS ONLY. PROVIDE QUANTITY OF CONTACTOR(S) NEEDED TO ACCOMMODATE NUMBER OF POLES SHOWN.

CONTROL ZONE DESCRIPTION & CONTACTOR CONTROL METHOD

C1 - SIGNAGE

C2- INTERIOR LIGHTING

C3 - EXTERIOR LIGHTING

C4 - DRIVE THRU

SUPPLY	CIRCUIT NUMBER	NUMBER OF POLES	CONTACT CURRENT	LOAD NAME
C1				
A	65	1	5.0 A	SIGNAGE | CONTINUOUS
A	67	1	10.0 A	SIGNAGE | CONTINUOUS
A	69	1	3.3 A	SIGNAGE | CONTINUOUS
C2				
A	16	1	1.5 A	(EX) EF-1
A	22	1	3.3 A	LTG ENGINE 105
A	24	1	4.1 A	LTG ENGINE 105
A	26	1	3.5 A	LTG CAFE 101-E
A	28	1	4.0 A	LTG CAFE 101-A
C3				
A	32	1	0.4 A	LTG
A	77	1	1.5 A	PATIO LTG
C4				
A	81	1	4.2 A	DIRECTIONAL SIGNS
A	20	1	4.2 A	SLA | LTG

LIGHTING CONTROL DESIGN INTENT

EXTERIOR LIGHTING AND SIGNAGE:
HARDWARE: LIGHTING CONTACTOR(S) AND TIMECLOCK.
CONTROL INTENT: STOREFRONT LIGHTING AND SIGNAGE SHALL TURN "ON" AND "OFF" BASED ON THE TIME SCHEDULE(S) PROGRAMMED INTO THE TIMECLOCK.

DINING AREA LIGHTS AND TRACK LIGHTING:
HARDWARE: WALL MOUNTED DIMMER SWITCHES, LIGHTING CONTACTOR AND TIMECLOCK.
CONTROL INTENT: DURING BUSINESS HOURS (HOURS PROGRAMMED INTO TIMECLOCK) THE DINING AREA LIGHTS AND TRACK LIGHTING SHALL TURN "ON" AND "OFF" BASED ON THE TIME SCHEDULE(S) PROGRAMMED INTO THE TIMECLOCK.
THE OVERRIDE SWITCH SHALL OVERRIDE THE TIMECLOCK SCHEDULING (FOR A MAXIMUM OF 2-HOURS) AND ALLOW FOR AFTER HOURS CONTROL OF THE LIGHTING.

ENGINE LIGHTING:
HARDWARE: WALL MOUNTED DIMMER SWITCHES, LIGHTING CONTACTOR AND TIMECLOCK.
CONTROL INTENT: DURING BUSINESS HOURS (HOURS PROGRAMMED INTO TIMECLOCK) THE SALES AREA GENERAL LIGHTING AND STOCK ROOM SHALL TURN "ON" AND "OFF" BASED ON THE TIME SCHEDULE(S) PROGRAMMED INTO THE TIMECLOCK.
THE OVERRIDE SWITCH SHALL OVERRIDE THE TIMECLOCK SCHEDULING (FOR A MAXIMUM OF 2-HOURS) AND ALLOW FOR AFTER HOURS CONTROL OF THE LIGHTING.

KEYED NOTES:

1. PROVIDE TIME-BASED CONTROL FOR APPLICABLE CIRCUITS AS DEFINED ON TIMECLOCK SCHEDULE.
2. PROVIDE CONTACTOR CONTROL FOR APPLICABLE CIRCUITS AS DEFINED ON LIGHTING CONTACTOR SCHEDULE.
3. EF-1 IS TO BE CIRCUITED AHEAD OF RESTROOM VESTIBULE LOCAL CONTROL TO ALLOW FOR TIME-BASED CONTROL ONLY.

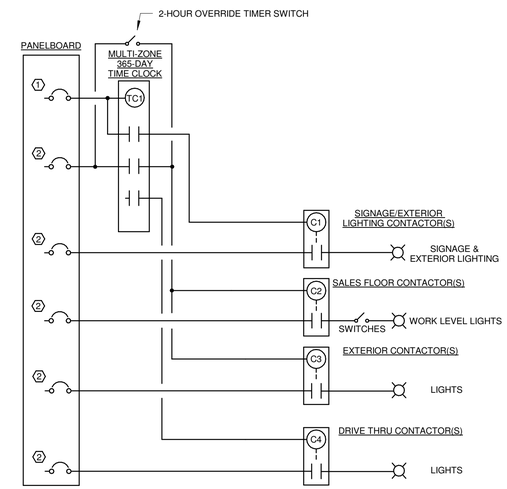

LIGHTING CONTROL SCHEMATIC - 4 CONTACTOR

SCALE: NONE

KLH ENGINEERS
MECHANICAL/ELECTRICAL ENGINEERS
WWW.KLHENGRS.COM
KOHRS LONNEMANN HEIL ENGINEERS, INC.
444 SOUTH FRONT STREET
COLUMBUS, OHIO 43215
800-354-9783 614-228-2180
614-228-2183 FAX
FORT THOMAS, KENTUCKY
LEXINGTON, KENTUCKY
LOUISVILLE, KENTUCKY
NEW YORK, NEW YORK

PERMIT SET - FOR CONSTRUCTION

© 2022 STARBUCKS COFFEE COMPANY

STARBUCKS COFFEE COMPANY
2401 UTAH AVENUE SOUTH
SEATTLE, WASHINGTON 98134
(206) 318-1575

THESE DRAWINGS AND PROJECT MANUAL ARE CONFIDENTIAL AND SHALL REMAIN THE SOLE PROPERTY OF STARBUCKS CORPORATION, WHICH IS THE OWNER OF THE COPYRIGHT IN THIS WORK. THEY SHALL NOT BE REPRODUCED (IN WHOLE OR IN PART), SHARED WITH THIRD PARTIES OR USED IN ANY MANNER ON OTHER PROJECTS OR EXTENSIONS TO THIS PROJECT WITHOUT THE PRIOR WRITTEN CONSENT OF STARBUCKS CORPORATION. THESE DRAWINGS AND SPECIFICATIONS ARE INTENDED TO EXPRESS DESIGN INTENT FOR A PROTOTYPICAL STARBUCKS STORE (WHICH IS SUBJECT TO CHANGE AT ANYTIME) AND DO NOT REFLECT ACTUAL SITE CONDITIONS. NEITHER PARTY SHALL HAVE ANY OBLIGATION NOR LIABILITY TO THE OTHER (EXCEPT STATED ABOVE) UNTIL A WRITTEN AGREEMENT IS FULLY EXECUTED BY BOTH PARTIES.

STARBUCKS TEMPLATE VERSION |2022.10.23

Gensler
MAIN OFFICE
M. ARTHUR GENSLER JR. & ASSOCIATES
FL QUALIFIER'S LIC. NO. AR96486
45 FREMONT ST, SUITE 1500
SAN FRANCISCO, CA 94105 USA
Tel (415) 433.3700
Fax (415) 836.4599
SATELLITE OFFICE
10 NORTH PARK PLACE
SUITE 402
MORRISTOWN, NJ 07960 USA
Tel (973) 290.8500

PROJECT NAME:
ST LUCIE WEST & SW CASHEMERE BLVD

PROJECT ADDRESS:
920 SW SAINT LUCIE BLVD,
PORT ST.LUCIE, FL 34986

STORE #: 81616
PROJECT #: 101357-001
ISSUE DATE: 06-27-2025
STORE DESIGNER: ASHLEY SUEIRAS
DESIGN MANAGER: GENSLER
ENGINEER OF RECORD: KLH ENGINEERS

Revision Schedule

Rev	Date	By	Description

SHEET TITLE:
ELECTRICAL DETAILS

SCALE: AS SHOWN

SHEET NUMBER:
E504

9/4/2025 2:17:56 PM C:\Users\lheil\Documents\Revit\27472.00-23-MEP-SBX- Port St. Lucie, FL_lheil.rvt

ELECTRIC SINGLE LINE EQUIPMENT SCHEDULE

NOTES:
ALL CONDUIT SIZES INDICATED ARE MINIMUM SIZES. INCREASE SIZES AS REQUIRED TO ACCOMMODATE CONDUCTOR PULLING EASE, FIELD CONDITIONS, ETC.

"CU" = COPPER CONDUCTOR, "AL" = ALUMINUM CONDUCTOR

TYPICAL EQUIPMENT NAME NOMENCLATURE:
1 - POWER DISTRIBUTION SYSTEM (BLANK - NORMAL, E - EMERGENCY, S - STANDBY, L - LIFE SAFETY)
2 - DESCRIPTION (H - 480Y/277V, L - 208Y/120V)
3 - FLOOR / LEVEL
4 - SEQUENCE

FEEDER ID NOMENCLATURE:
* - INDICATES FEEDER SIZED TO COMPENSATE FOR VOLTAGE DROP
1 - GROUND TYPE (MAY BE BLANK)
U = EQUIPMENT GROUND CONDUCTOR REMOVED FOR SERVICE ENTRANCE FROM UTILITY
P = PARITY-SIZED EQUIPMENT GROUND CONDUCTOR
X = EXISTING FEEDER TO REMAIN UNLESS OTHERWISE NOTED
T = UPSIZED GROUND CONDUCTORS FOR TRANSFORMER SECONDARY

2 - CONDUCTOR AMPACITY
3 - TOTAL NUMBER OF PHASE AND GROUNDED ("NEUTRAL") CONDUCTORS
4 - CONDUCTOR MATERIAL: C = COPPER, A = ALUMINUM
5 - SPECIAL (MAY BE BLANK)
I = ISOLATED GROUND (PROVIDE CONTINUOUS INSULATED ISOLATED EQUIPMENT GROUNDING CONDUCTOR(S) FROM INSULATED ISOLATED GROUND BAR(S) TO RESPECTIVE UPSTREAM SERVICE ENTRANCE OR DERIVED SYSTEM GROUNDING ELECTRODE CONDUCTOR AS APPLICABLE.

EQUIPMENT	PHASE	EQUIPMENT TYPE	SUPPLY FROM	VOLTAGE	POLES	WIRES	DEMAND (kVA)	DEMAND (A)	MAINS RATING (A)	MAINS FRAME RATING (A)	MAINS TYPE	FEEDER ID	FEEDER	VD %	LUGS TYPE	SPD	ULSE	ENCLOSURE TYPE	FAULT CURRENT (A)	SHORT CIRCUIT RATING (A)	NOTES
UT1	Existing	Pad Mounted		208	3									0				NEMA 3R	12445		
-- CT1	Existing	32 x 24 x 10	UT1	208	3	4	161.0 kVA	447 A	600	600		X600	EXISTING FEEDER, AT RATING INDICATED, TO REMAIN UNLESS NOTED OTHERWISE	0.647				NEMA 3R	12550	EXISTING	
---- D1	Existing	Fused Switch	CT1	208	3	4	161.0 kVA	447 A	600	600	FUSED	X600	EXISTING FEEDER, AT RATING INDICATED, TO REMAIN UNLESS NOTED OTHERWISE	0.678			Yes	NEMA 3R	12471	EXISTING	
------ A	Existing	Branch Panelboard	D1	208	3	4	161.3 kVA	448 A	600	600	MAIN LUGS ONLY	X600	EXISTING FEEDER, AT RATING INDICATED, TO REMAIN UNLESS NOTED OTHERWISE	0.704	FEED-THROUGH			NEMA 1	12403	22000	
-------- B	Existing	Branch Panelboard	A	208	3	4	44.0 kVA	122 A	225	225	THERMAL MAGNETIC	X225	EXISTING FEEDER, AT RATING INDICATED, TO REMAIN UNLESS NOTED OTHERWISE	0.721				NEMA 1	12228	22000	

ELECTRIC EQUIPMENT SUPPLY SCHEDULE

EQUIPMENT MARK	SUPPLY FROM	CKT	EMERG.	LOAD (kVA)	AVAILABLE FAULT CURRENT	VOLTS	POLE	HTG KW	WATT	HP	FLA (A)	MCA (A)	RQD OCP (A)	BREAKER RATING (A)
22225	A	25,27,29		14.99	8396	208 V	3	15			41.6			60
23355	A	31		1.86	4393	120 V	1			1.01				25
AC-1	A	33	NO	0.36	845	120 V	1				3		20	20
CP1	A	49		0.09	2664	120 V	1			0.04	0.76			15

HVAC ELECTRICAL COORDINATION SCHEDULE

ABBREVIATIONS

DC	LOCAL DISCONNECT
MC	MOTOR CONTROL (POWER)
SD	DUCT SMOKE DETECTOR
CN	CONTROLS
TS	TOGGLE SWITCH
C/B	H.A.C.R. CIRCUIT BREAKER AT SOURCE PANELBOARD
FUSE	FUSE AT LOCAL DISCONNECT (VERIFY FIELD RATING)
FLA	OPERATING FULL LOAD AMPS
MCA	MINIMUM CIRCUIT AMPACITY
CP	CORD AND PLUG CONNECTION
[BLANK]	HARD WIRED (WHEN INDICATED FOR DC TYPE)

CONTRACTOR TYPE

EC	ELECTRICAL CONTRACTOR
EX	EXISTING
FC	FIRE PROTECTION CONTRACTOR
GC	GENERAL CONTRACTOR
HC	HVAC CONTRACTOR
MFR	MANUFACTURER
PC	PLUMBING CONTRACTOR
OR	OWNER OR OTHERS

MOTOR CONTROL TYPE

CS	COMBINATION STARTER
MCC	MOTOR CONTROL STARTER
MG	MAGNETIC STARTER OR CONTACT
MS	MANUAL STARTER
VFD	VARIABLE FREQUENCY DRIVE
MSR	MANUAL STARTER W/ CONTROL RELAY
OV	OVERCURRENT PROTECTION

CONTROL TYPE

TC	TIMECLOCK
CPT	CONTROL POWER TRANSFORMER
BAS	BUILDING AUTOMATION SYSTEM
LOW	LOW VOLTAGE CONTROLS
LINE	LINE VOLTAGE CONTROLS
RLINE	REVERSE ACTING LINE VOLTAGE THERMOSTAT
MAN	MANUAL
FA	FIRE ALARM
CO	CARBON MONOXIDE SENSOR
INT	INTEGRAL TO EQUIPMENT
AREA	AREA SMOKE DETECTOR
DUCT	DUCT SMOKE DETECTOR
ALARM	SHUTDOWN EQUIP ON GENERAL FIRE ALARM
FLOW	SHUTDOWN ON SPRINKLER FLOW
ANSUL	SHUTDOWN ON ANSUL ACTIVATION

SHORT CIRCUIT RATING

WHERE SHORT CIRCUIT RATING CODE REQUIRED VALUE INDICATES "YES" APPLICABLE EQUIPMENT'S SHORT CIRCUIT RATING SHALL EXCEED THE AVAILABLE FAULT CURRENT VALUE INDICATED.

CONNECTION MARK	DESCRIPTION	VOLTAGE	PHASE	EMERGENCY	HP	WATTS	HTG KW	FLA	MCA	OCP	FED FROM	DC TYPE	DC FURN	DC INST	DC WIRE	MC TYPE	MC FURN	MC INST	MC WIRE	CN TYPE	CN FURN	CN INST	CN WIRE	FA SHUTDOWN	SHORT CIRCUIT RATING CODE REQUIRED?	AVAILABLE FAULT CURRENT
AC-1	AIR CURTAIN W/ELECTRIC HEAT	120 V	1	NO				3		20			EC	EC	EC	MG	MFR	MFR	MFR	INT	MFR	MFR	MFR	NONE	No	845

PLUMBING ELECTRICAL COORDINATION SCHEDULE

ABBREVIATIONS

DC	LOCAL DISCONNECT
MC	MOTOR CONTROL (POWER)
SD	DUCT SMOKE DETECTOR
CN	CONTROLS
TS	TOGGLE SWITCH
C/B	H.A.C.R. CIRCUIT BREAKER AT SOURCE PANELBOARD
FUSE	FUSE AT LOCAL DISCONNECT (VERIFY FIELD RATING)
FLA	OPERATING FULL LOAD AMPS
MCA	MINIMUM CIRCUIT AMPACITY
CP	CORD AND PLUG CONNECTION
[BLANK]	HARD WIRED (WHEN INDICATED FOR DC TYPE)

CONTRACTOR TYPE

EC	ELECTRICAL CONTRACTOR
EX	EXISTING
FC	FIRE PROTECTION CONTRACTOR
GC	GENERAL CONTRACTOR
HC	HVAC CONTRACTOR
MFR	MANUFACTURER
PC	PLUMBING CONTRACTOR
OR	OWNER OR OTHERS

MOTOR CONTROL TYPE

CS	COMBINATION STARTER
MCC	MOTOR CONTROL STARTER
MG	MAGNETIC STARTER OR CONTACT
MS	MANUAL STARTER
VFD	VARIABLE FREQUENCY DRIVE
MSR	MANUAL STARTER W/ CONTROL RELAY
OV	OVERCURRENT PROTECTION

CONTROL TYPE

TC	TIMECLOCK
CPT	CONTROL POWER TRANSFORMER
BAS	BUILDING AUTOMATION SYSTEM
LOW	LOW VOLTAGE CONTROLS
LINE	LINE VOLTAGE CONTROLS
RLINE	REVERSE ACTING LINE VOLTAGE THERMOSTAT
MAN	MANUAL
FA	FIRE ALARM
CO	CARBON MONOXIDE SENSOR
INT	INTEGRAL TO EQUIPMENT

SHORT CIRCUIT RATING

WHERE SHORT CIRCUIT RATING CODE REQUIRED VALUE INDICATES "YES" APPLICABLE EQUIPMENT'S SHORT CIRCUIT RATING SHALL EXCEED THE AVAILABLE FAULT CURRENT VALUE INDICATED.

CONNECTION MARK	DESCRIPTION	VOLTAGE	PHASE	EMERGENCY	HP	WATTS	HTG KW	FLA	MCA	OCP	FED FROM	DC TYPE	DC FURN	DC INST	DC WIRE	MC TYPE	MC FURN	MC INST	MC WIRE	CN TYPE	CN FURN	CN INST	CN WIRE	SHORT CIRCUIT RATING CODE REQUIRED?	AVAILABLE FAULT CURRENT
22225	TANK TYPE ELECTRIC WATER HEATER	208 V	3				15	41.6					EC	EC	EC	--	--	--	--	INT	MFR	MFR	MFR	No	8396
23355	DOMESTIC WATER BOOSTER PUMP	120 V	1		1.01								EC	EC	EC	VFD	MFR	MFR	MFR	INT	MFR	MFR	MFR	No	4393
CP1	DOMESTIC HOT WATER CIRCULATION PUMP	120 V	1		0.04			0.76					EC	EC	EC	MG	MFR	MFR	MFR	LINE	PC	PC	EC	No	2664

GENERAL ELECTRICAL POWER DISTRIBUTION NOTES

A. PARALLEL CONDUCTOR SETS: CUT PARALLEL SERVICE/FEEDER CONDUCTORS TO EXACTLY THE SAME LENGTHS AND USE CONDUCTORS FROM THE SAME FACTORY RUN. TORQUE ALL CONNECTIONS FOR PARALLEL SERVICE/FEEDER CONDUCTORS TO IDENTICAL VALUES.
B. OVERCURRENT PROTECTION RATINGS: UNLESS INDICATED OTHERWISE, PROVIDE FULLY-RATED OR SERIES-RATED OVERCURRENT PROTECTION (OCP) AS REQUIRED TO COMPLY WITH ALL APPLICABLE REQUIREMENTS OF NFPA 70. PROVIDE EQUIPMENT AND OCP RATED TO MEET OR EXCEED THE AVAILABLE SERIES-RATED FAULT CURRENT AT THE RESPECTIVE NODE IN THE POWER DISTRIBUTION SYSTEM. SERIES-RATED BREAKERS/SYSTEMS ARE NOT PERMITTED WHERE PROHIBITED BY PREVAILING CODES AND STANDARDS, INCLUDING APPLICATIONS INVOLVING MOTOR CONTRIBUTION AS ADDRESSED IN ARTICLE 240.86(C) OF NFPA 70. FURNISH ELECTRONIC COPIES OF THE ELECTRICAL DOCUMENTS TO THE MANUFACTURER'S REPRESENTATIVE AND/OR EQUIPMENT SUPPLIER SO THAT PROPERLY RATED AND BRACED EQUIPMENT IS PROVIDED UNDER BASE BID.
C. GROUNDING ELECTRODE CONDUCTOR SYSTEM: PROVIDE GROUNDING ELECTRODE CONDUCTOR SYSTEM IN STRICT COMPLIANCE WITH THE LATEST ADOPTED EDITION OF THE NATIONAL ELECTRICAL CODE (NFPA 70), INCLUDING ARTICLE 250 AND TABLE 250.66. THESE CONDUCTORS MAY OR MAY NOT BE INDICATED ON SINGLE-LINE DIAGRAMS, BUT SHALL BE PROVIDED UNDER BASE BID NEVERTHELESS.
D. FLUSH MOUNTED EQUIPMENT: PROVIDE FLUSH MOUNTED POWER DISTRIBUTION AND RELATED EQUIPMENT FOR APPLICATIONS IN FINISHED AREAS AND COORDINATE THESE LOCATIONS AND INSTALLATIONS WITH ARCHITECT, OWNER AND AFFECTED TRADES. ELSEWHERE PROVIDE SURFACE MOUNTED EQUIPMENT UNLESS FLUSH MOUNTED EQUIPMENT IS SHOWN ON DRAWINGS OR UNLESS NEEDED TO ACCOMMODATE UNUSUAL CONDITIONS.
E. POWER DISTRIBUTION EQUIPMENT LABELS: IN ADDITION TO LABELS REQUIRED WITHIN THE SPECIFICATIONS, INCLUDE CORRESPONDING MAXIMUM AIC (AVAILABLE INRUSH CURRENT) AND SHORT-CIRCUIT CURRENT RATING (SCCR) FOR EACH PIECE OF POWER DISTRIBUTION EQUIPMENT, ALONG WITH ARC FLASH LABELS COMPLIANT WITH ARTICLE 110.16 OF NFPA 70. ALSO INCLUDE CONDUCTOR COLOR CODING FOR THE BUILDING AND PHASE ROTATION AS APPLICABLE.
F. EQUIPMENT LUGS: PROVIDE LUGS, LUG KITS AND RELATED ACCESSORY WORK AS REQUIRED TO ACCOMMODATE THE CONDUCTOR SIZES AND QUANTITIES NEEDED FOR EACH APPLICATION. COORDINATE WITH SINGLE-LINE DIAGRAM, FIELD CONDITIONS, ETC.
G. ALUMINUM CONDUCTORS: PROVIDE THE FOLLOWING SUPPLEMENTAL WORK FOR ALUMINUM-CONDUCTOR ELECTRICAL EQUIPMENT CONNECTIONS, REGARDLESS OF WHO FURNISHES THE EQUIPMENT: REVIEW EQUIPMENT SUBMITTALS, INSTALLATION DOCUMENTS AND NAMEPLATES TO DETERMINE IF THERE ARE ANY WARRANTY OR UL LIMITATIONS REGARDING COPPER VERSUS ALUMINUM WIRING CONNECTIONS AT EQUIPMENT; IF THERE ARE ANY LIMITATIONS, PROVIDE LOCAL DISCONNECT AT OR NEAR EQUIPMENT (EXTERNAL TO THE EQUIPMENT) AND TERMINATE ALUMINUM CONDUCTORS TO THE LINE-SIDE LUGS/TERMINALS OF THE DISCONNECT SWITCH; PROVIDE COPPER CONDUCTORS FROM LOAD-SIDE LUGS/TERMINALS OF THE DISCONNECT SWITCH TO THE RESPECTIVE EQUIPMENT FACTORY DISCONNECT OR LUG/TERMINALS AS APPLICABLE; COORDINATE ALL RELATED WORK WITH ALL AFFECTED INSTALLERS.
H. BREAKER FRAME SIZES: AMPERE RATINGS INDICATED ON DRAWINGS FOR CIRCUIT BREAKERS ARE SHOWN TO DEFINE OVERCURRENT REQUIREMENTS/TRIP RATINGS. PROVIDE BREAKER FRAMES IN SIZES AND TYPES GREATER THAN THE DESIGNATED OVERCURRENT TRIP RATINGS WHERE NECESSARY TO ACHIEVE THE REQUIRED SELECTIVE COORDINATION, AND/OR AS NECESSARY FOR OTHER APPLICABLE REASONS.
I. PLYWOOD EQUIPMENT BOARDS: SEE SPECIFICATION SECTION 260529.00 FOR REQUIREMENTS ASSOCIATED WITH PLYWOOD EQUIPMENT BOARDS.

FAULT CURRENT CALCULATIONS BASED ON LANDLORD SHELLS AT 12445 AIC AT UTILITY TRANSFORMER.

PANEL B SHALL BE SERIES RATED WITH THE MAIN BREAKER IN IT SO THAT 10KAIC GFCI CIRCUIT BREAKERS MAY BE USED. PANEL SHALL BE FACTORY LABELED AS SERIES RATED AND SHALL BE FIELD LABELED, BY THE CONTRACTOR, AS SERIES RATED PER NEC 110.22. INCLUDE SERIES COMBINATION CHARTS WITH SUBMITTAL FOR REVIEW.

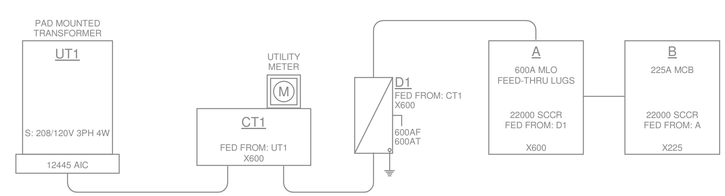

SINGLE LINE DIAGRAM

SCALE: NONE

KLH ENGINEERS

MECHANICAL/ELECTRICAL ENGINEERS

WWW.KLHENGRS.COM

KOHRS LONNEMANN HEIL ENGINEERS, INC.
444 SOUTH FRONT STREET
COLUMBUS, OHIO 43215
800-354-9783 614-228-2180
614-228-2183 FAX

FORT THOMAS, KENTUCKY
LEXINGTON, KENTUCKY
LOUISVILLE, KENTUCKY
NEW YORK, NEW YORK

PERMIT SET - FOR CONSTRUCTION

© 2022 STARBUCKS COFFEE COMPANY

STARBUCKS COFFEE COMPANY
2401 UTAH AVENUE SOUTH
SEATTLE, WASHINGTON 98134
(206) 318-1575

THESE DRAWINGS AND PROJECT MANUAL ARE CONFIDENTIAL AND SHALL REMAIN THE SOLE PROPERTY OF STARBUCKS CORPORATION, WHICH IS THE OWNER OF THE COPYRIGHT IN THIS WORK. THEY SHALL NOT BE REPRODUCED (IN WHOLE OR IN PART), SHARED WITH THIRD PARTIES OR USED IN ANY MANNER ON OTHER PROJECTS OR EXTENSIONS TO THIS PROJECT WITHOUT THE PRIOR WRITTEN CONSENT OF STARBUCKS CORPORATION. THESE DRAWINGS AND SPECIFICATIONS ARE INTENDED TO EXPRESS DESIGN INTENT FOR A PROTOTYPICAL STARBUCKS STORE (WHICH IS SUBJECT TO CHANGE AT ANYTIME) AND DO NOT REFLECT ACTUAL SITE CONDITIONS. NEITHER PARTY SHALL HAVE ANY OBLIGATION NOR LIABILITY TO THE OTHER (EXCEPT STATED ABOVE) UNTIL A WRITTEN AGREEMENT IS FULLY EXECUTED BY BOTH PARTIES.

STARBUCKS TEMPLATE VERSION |2022.10.23

Gensler

MAIN OFFICE
M. ARTHUR GENSLER JR. & ASSOCIATES
FL QUALIFIER'S LIC. NO. AR96486
45 FREMONT ST, SUITE 1500
SAN FRANCISCO, CA 94105 USA
Tel (415) 433.3700
Fax (415) 836.4599

SATELLITE OFFICE
10 NORTH PARK PLACE
SUITE 400
MORRISTOWN, NJ 07960 USA
Tel (973) 290.8500

PROJECT NAME:
ST LUCIE WEST & SW
CASHEMERE BLVD

PROJECT ADDRESS:
920 SW SAINT LUCIE BLVD,
PORT ST.LUCIE, FL 34986

STORE #: 81616
PROJECT #: 101357-001
ISSUE DATE: 06-27-2025
STORE DESIGNER: ASHLEY SUEIRAS
DESIGN MANAGER: GENSLER
ENGINEER OF RECORD: KLH ENGINEERS

Revision Schedule

Rev	Date	By	Description

SHEET TITLE:
ELECTRICAL SINGLE LINE
SCALE: AS SHOWN

SHEET NUMBER:
E601

9/4/2025 2:17:58 PM C:\Users\lheil\Documents\Revit\274472.00-23-MEP-SBX- Port St. St. Lucie, FL_lheil.rvt

PANEL NAME: A

SUPPLY FROM: D1 | MAINS RATING (A): 600 | FAULT CURRENT (A): 12403 | PHASE: Existing
LOCATION: BOH 106 | MAINS TYPE: MAIN LUGS ONLY | SHORT CIRCUIT RATING (A): 22000 | SURGE SUPRESSION:
DISTRIBUTION SYSTEM: 208/120V 3PH 4W | FEEDER ID: X600 | LUGS TYPE: FEED-THROUGH | ULSE:
FEEDER: EXISTING FEEDER, AT RATING INDICATED, TO REMAIN UNLESS NOTED OTHERWISE | ENCLOSURE TYPE: NEMA 1 | 200% NEUTRAL:
ISOLATED GROUND:

CKT	CIRCUIT DESCRIPTION	VD%	AWG	GND	TRIP	FRAME	POLE	A		B		C		POLE	FRAME	TRIP	GND	AWG	VD%	CIRCUIT DESCRIPTION	CKT
1	SPACE	--	--	--	--	--	1	--	--					1	--	--	--	--	--	SPACE	2
3	(EX) RTU RCPT	--	--	--	20 A	20 A	1			0.36	11.24										4
5												11.24	11.24	3	110 A	110 A	--	--	--	(EX) RTU-1	6
7	(EX) RTU-2	--	--	--	110 A	110 A	3	11.24	11.24												8
9										11.24	--			1	--	--	--	--	--	SPACE	10
11	SPACE	--	--	--	--	--	1					--	--	1	--	--	--	--	--	SPACE	12
13	SPACE	--	--	--	--	--	1	--	--					1	--	--	--	--	--	SPACE	14
15	SPACE	--	--	--	--	--	1			--	0.18			1	15 A	15 A	--	--	--	(EX) EF-1	16
17	SPACE	--	--	--	--	--	1					--	--	1	--	--	--	--	--	SPACE	18
19	SPACE	--	--	--	--	--	1	--	0.50					1	20 A	20 A	#12	#12	0.585	SLA | LTG	20
21	ICE MACHINE REMOTE CONDENSER	1.373	#8	#10	35 A	35 A	2			2.82	0.40			1	20 A	20 A	#12	#12	0.457	LTG ENGINE 105	22
23												2.82	0.50	1	20 A	20 A	#12	#12	0.505	LTG ENGINE 105	24
25								5.00	0.42					1	20 A	20 A	#12	#12	0.26	LTG CAFE 101-E	26
27	22225	0.196	#4	#10	60 A	60 A	3			5.00	0.48			1	20 A	20 A	#12	#12	0.44	LTG CAFE 101-A	28
29												5.00	0.42	1	20 A	20 A	#12	#12	0.094	LTG BOH 106	30
31	23355	0.554	#10	#10	25 A	25 A	1	1.86	0.05					1	20 A	20 A	#12	#12	0.01	LTG	32
33	AC-1 | ENGINE 105	0.809	#12	#12	20 A	20 A	1			0.36	0.11			1	20 A	20 A	#12	#12	0.156	LTG OFFICE 107	34
35	HVAC SERVICE RECEPT | RCPT 101-A, 102	0.27	#12	#12	20 A	20 A	1					0.36	0.72	1	20 A	20 A	#12	#12	0.692	RCPT CAFE 101-A	36
37	(G) 23454 MICROWAVE PARTNERS DESK |...	1.811	#12	#12	20 A	20 A	1	1.10	--					1	--	--	--	--	--	SPACE	38
39	(G) UNDERCOUNTER REFRIGERATOR | KITCHE...	0.388	#12	#12	20 A	20 A	1			0.24	--			1	--	--	--	--	--	SPACE	40
41	SPARE	--	--	--	20 A	20 A	1					0.00	--	1	--	--	--	--	--	SPACE	42
43	SPARE	--	--	--	20 A	20 A	1	0.00	--					1	--	--	--	--	--	SPACE	44
45	SPARE	--	--	--	20 A	20 A	1			0.00	--			1	--	--	--	--	--	SPACE	46
47	SPARE	--	--	--	20 A	20 A	1					0.00	--	1	--	--	--	--	--	SPACE	48
49	CP1 | BOH 106	0.055	#12	#12	15 A	15 A	1	0.09	--					1	--	--	--	--	--	SPACE	50
51	PC, PRINTER, PHOME & HPC | RCPT OFFICE 107	0.64	#12	#12	20 A	20 A	1			0.36	--			1	--	--	--	--	--	SPACE	52
53	LAPTOP, CASH SCALE AND FUTURE USE | RCPT...	0.633	#12	#12	20 A	20 A	1					0.36	--	1	--	--	--	--	--	SPACE	54
55	RCPT OFFICE 107	0.625	#12	#12	20 A	20 A	1	0.36	--					1	--	--	--	--	--	SPACE	56
57	MUSIC SYSTEM AMP AND FUTURE USE | RCPT...	0.312	#12	#12	20 A	20 A	1			0.18	--			1	--	--	--	--	--	SPACE	58
59	RCPT CAFE 101-A	0.835	#12	#12	20 A	20 A	1					0.90	--	1	--	--	--	--	--	SPACE	60
61	RCPT, NON-CONT. 101-D, 101-B	0.264	#12	#12	20 A	20 A	1	0.41	--					1	--	--	--	--	--	SPACE	62
63	EMS CONCENTRATOR SECURITY CONTROL...	0.727	#12	#12	20 A	20 A	1			0.54	--			1	--	--	--	--	--	SPACE	64
65	SIGNAGE | CONTINUOUS	0.699	#12	#12	20 A	20 A	1					0.60	--	1	--	--	--	--	--	SPACE	66
67	SIGNAGE | CONTINUOUS	2.261	#12	#12	20 A	20 A	1	1.20	--					1	--	--	--	--	--	SPACE	68
69	SIGNAGE | CONTINUOUS	0.383	#12	#12	20 A	20 A	1			0.40	--			1	--	--	--	--	--	SPACE	70
71	C4 | BOH 106	0.01	#12	#12	20 A	20 A	1					0.10	--	1	--	--	--	--	--	SPACE	72
73	RCPT BOH 106	0.044	#12	#12	20 A	20 A	1	0.36	--					1	--	--	--	--	--	SPACE	74
75	RCPT ENGINE 105	0.981	#12	#12	20 A	20 A	1			0.72	--			1	--	--	--	--	--	SPACE	76
77	PATIO LTG	0.085	#12	#12	20 A	20 A	1					0.18	--	1	--	--	--	--	--	SPACE	78
79	22540 22542 22546 | NON-CONT.	0.228	#12	#12	20 A	20 A	1	0.30	--					1	--	--	--	--	--	SPACE	80
81	DIRECTIONAL SIGNS	1.596	#12	#12	20 A	20 A	1			0.50	--			1	--	--	--	--	--	SPACE	82
83	PATIO RCPT	0.257	#12	#12	20 A	20 A	1					0.54	--	1	--	--	--	--	--	SPACE	84
						TOTAL CONNECTED LOAD:		54.6 kVA		57.8 kVA		54.4 kVA									

LOAD CLASSIFICATION	CONNECTED LOAD	DEMAND FACTOR	ESTIMATED DEMAND	PANEL TOTALS	
Continuous	17187 VA	125.00%	21484 VA	EXISTING CONNECTED LOAD:	
Cooling	0 VA	0.00%	0 VA	EXISTING LOAD DEMAND FACTOR:	
Elevator	0 VA	0.00%	0 VA	ADDED CONNECTED LOAD:	166741 VA
Heating	0 VA	0.00%	0 VA	DEMAND CALCULATION NOTES:	
Kitchen Equipment	54136 VA	65.00%	35188 VA		
Lighting	3551 VA	125.00%	4439 VA	TOTAL DEMAND:	161301.9 VA
Motor	75565 VA	111.16%	83995 VA	TOTAL DEMAND AMPS:	448 A
Non-Continuous	6090 VA	100.00%	6090 VA		
Receptacle	10212 VA	98.96%	10106 VA		
NOTES:			BREAKER QUANTITIES (NEW ONLY)		
			(1) 15A / 1P, (32) 20A / 1P, (2) 20A / 1P(G), (1) 25A / 1P, (1) 35A / 2P, (1) 60A / 3P		

PANEL NAME: B

SUPPLY FROM: A | MAINS RATING (A): 225 | FAULT CURRENT (A): 12228 | PHASE: Existing
LOCATION: BOH 106 | MAINS TYPE: THERMAL MAGNETIC | SHORT CIRCUIT RATING (A): 22000 | SURGE SUPRESSION:
DISTRIBUTION SYSTEM: 208/120V 3PH 4W | FEEDER ID: X225 | LUGS TYPE: | ULSE:
FEEDER: EXISTING FEEDER, AT RATING INDICATED, TO REMAIN UNLESS NOTED OTHERWISE | ENCLOSURE TYPE: NEMA 1 | 200% NEUTRAL:
ISOLATED GROUND:

CKT	CIRCUIT DESCRIPTION	VD%	AWG	GND	TRIP	FRAME	POLE	A		B		C		POLE	FRAME	TRIP	GND	AWG	VD%	CIRCUIT DESCRIPTION	CKT
1	KITCHEN EQUIPMENT BOH 106	0.188	#12	#12	20 A	20 A	1	0.18	0.84					2	20 A	20 A	#12	#12	0.815	(G) 23183 MACHINE 23183 | BOH 106	2
3	(G) REFRIGERATOR 2DR | KITCHEN EQUIPMENT...	0.444	#12	#12	20 A	20 A	1			0.64	0.84										4
5	(G) REFRIGERATOR 2DR | KITCHEN EQUIPMENT...	0.365	#12	#12	20 A	20 A	1					0.64	0.36	1	20 A	20 A	#12	#12	0.751	(G) UNDERCOUNTER FRIDGE 10267 | ENGINE 105	6
7	(G) FREEZER 2DR | KITCHEN EQUIPMENT BOH...	1.142	#12	#12	20 A	20 A	1	1.10	0.24					1	20 A	20 A	#12	#12	0.544	(G) UNDERCOUNTER REFRIGERATOR | KITCHE...	8
9	(G) FREEZER 2DR | KITCHEN EQUIPMENT BOH...	0.996	#12	#12	20 A	20 A	1			1.10	1.80			1	20 A	20 A	#12	#12	0.968	(G)(LT) HAND DRYER | NON-CONT. RR 103	10
11	(G) FREEZER 1DR | KITCHEN EQUIPMENT BOH...	0.664	#12	#12	20 A	20 A	1					0.83	1.80	1	20 A	20 A	#12	#12	0.819	(G)(LT) HAND DRYER | NON-CONT. RR 104	12
13								2.99	1.12					1	20 A	20 A	#12	#12	0.441	(G) FREEZER 1DR REFRIGERATOR 1DR |...	14
15	(G) SANITIZER | KITCHEN EQUIPMENT BOH 106	0.788	#8	#10	35 A	35 A	3			2.99	0.36			1	20 A	20 A	#12	#12	0.74	(G) DT TECHNOLOGY EQUIPMENT | RCPT ENGIN...	16
17												2.99	0.18	1	20 A	20 A	#12	#12	0.367	(G) SIGNAL PROCESSER | RCPT ENGINE 105	18
19	(G) ESPRESSO MASTRENA II | KITCHEN	1.44	#8	#10	35 A	35 A	2	2.90	0.36					1	20 A	20 A	#12	#12	0.724	(G) DT DPM, UPS, POS AND FUTURE USE | RCPT...	20
21	EQUIPMENT ENGINE 105									2.90	0.36			1	20 A	20 A	#12	#12	0.718	(G) FUTURE USE | RCPT ENGINE 105	22
23	(G) ESPRESSO MASTRENA II | KITCHEN	1.569	#8	#10	35 A	35 A	2					2.90	--	1	--	--	--	--	--	SPACE	24
25	EQUIPMENT ENGINE 105							2.90	--					1	--	--	--	--	--	SPACE	26
27	(G) INSTAHOT DISPENSER | KITCHEN EQUIPME...	2.846	#12	#12	20 A	20 A	1			1.50	--			1	--	--	--	--	--	SPACE	28
29	(G) INSTAHOT DISPENSER | KITCHEN EQUIPME...	1.87	*#10	*#10	20 A	20 A	1					1.50	--	1	--	--	--	--	--	SPACE	30
31	(G) FUTURE USE | RCPT ENGINE 105	0.663	#12	#12	20 A	20 A	1	0.36	--					1	--	--	--	--	--	SPACE	32
33	(G) POS REG/POS PRINTER | RCPT ENGINE 105	0.448	#12	#12	20 A	20 A	1			0.25	--			1	--	--	--	--	--	SPACE	34
35	(G) POS REG/POS PRINTER | RCPT ENGINE 105	0.42	#12	#12	20 A	20 A	1					0.25	--	1	--	--	--	--	--	SPACE	36
37	(G) 16238 ZEPHYR CASE 16238 | ENGINE 105	0.391	#12	#12	20 A	20 A	2	0.36	--					1	--	--	--	--	--	SPACE	38
39										0.36	--			1	--	--	--	--	--	SPACE	40
41	(G) ON COUNTER BLENDER | KITCHEN...	2.753	*#10	*#10	20 A	20 A	1					1.80	--	1	--	--	--	--	--	SPACE	42
43	(G) ON COUNTER BLENDER | KITCHEN...	2.562	*#10	*#10	20 A	20 A	1	1.80	--					1	--	--	--	--	--	SPACE	44
45	(G) EIKON OVEN 20032 | ENGINE 105	1.942	#10	#10	30 A	30 A	2			3.00	--			1	--	--	--	--	--	SPACE	46
47												3.00	--	1	--	--	--	--	--	SPACE	48
49	(G) EIKON OVEN 20032 | ENGINE 105	1.96	#10	#10	30 A	30 A	2	3.00	--					1	--	--	--	--	--	SPACE	50
51										3.00	--			1	--	--	--	--	--	SPACE	52
53	(G) LABELER, FUTURE USE/CONNECT DEVICE...	0.633	#12	#12	20 A	20 A	1					0.36	--	1	--	--	--	--	--	SPACE	54
55	(G) BREWER CLOVER VERTICA DOUBLE |	0.829	#12	#12	20 A	20 A	2	0.87	--					1	--	--	--	--	--	SPACE	56
57	KITCHEN EQUIPMENT ENGINE 105									0.87	--			1	--	--	--	--	--	SPACE	58
59	(G) GRINDER AND FUTURE USE | KITCHEN...	2.169	#12	#12	20 A	20 A	1					1.56	--	1	--	--	--	--	--	SPACE	60
61	UPS | RCPT OFFICE 107	0.269	#12	#12	20 A	20 A	1	0.18	--					1	--	--	--	--	--	SPACE	62
63	PDU STRIP/FUTURE USE | RCPT OFFICE 107	0.264	#12	#12	20 A	20 A	1			0.18	--			1	--	--	--	--	--	SPACE	64
65	(G) DPM TABLET AND FUTURE USE | RCPT CAFE...	0.792	#12	#12	20 A	20 A	1					0.36	--	1	--	--	--	--	--	SPACE	66
67	RCPT BOH 106	0.195	#12	#12	20 A	20 A	1	0.18	--					1	--	--	--	--	--	SPACE	68
69	(G) CONNECT DEVICE LABELER | KITCHEN...	0.717	#12	#12	20 A	20 A	1			0.36	--			1	--	--	--	--	--	SPACE	70
71	(G) UNDERCOUNTER REFRIGERATOR | KITCHE...	0.918	#12	#12	20 A	20 A	1					0.48	--	1	--	--	--	--	--	SPACE	72
73	(G) NITRO GENERATOR ELEMENT NITRO REF |...	1.509	#12	#12	20 A	20 A	1	0.65	--					1	--	--	--	--	--	SPACE	74
75	(G) FUTURE USE REFRIGERATOR | KITCHEN...	1.057	#12	#12	20 A	20 A	1			0.42	--			1	--	--	--	--	--	SPACE	76
77	(G) LABELER/FUTURE USE | RCPT ENGINE 105	0.422	#12	#12	20 A	20 A	1					0.18	--	1	--	--	--	--	--	SPACE	78
79	(G) FUTURE USE REFRIGERATOR | KITCHEN...	0.996	#12	#12	20 A	20 A	1	0.42	--					1	--	--	--	--	--	SPACE	80
81	(G) UNDERCOUNTER FRIDGE 12618 | ENGINE 105	2.841	#12	#12	20 A	20 A	1			1.73	--			1	--	--	--	--	--	SPACE	82
83	(G) UNDERCOUNTER REFRIGERATOR | KITCHE...	0.524	#12	#12	20 A	20 A	1					0.24	--	1	--	--	--	--	--	SPACE	84
						TOTAL CONNECTED LOAD:		20.4 kVA		22.7 kVA		19.4 kVA									

LOAD CLASSIFICATION	CONNECTED LOAD	DEMAND FACTOR	ESTIMATED DEMAND	PANEL TOTALS	
Continuous	0 VA	0.00%	0 VA	EXISTING CONNECTED LOAD:	
Cooling	0 VA	0.00%	0 VA	EXISTING LOAD DEMAND FACTOR:	
Elevator	0 VA	0.00%	0 VA	ADDED CONNECTED LOAD:	62528 VA
Heating	0 VA	0.00%	0 VA	DEMAND CALCULATION NOTES:	
Kitchen Equipment	52796 VA	65.00%	34317 VA		
Lighting	0 VA	0.00%	0 VA	TOTAL DEMAND:	44049.4 VA
Motor	0 VA	0.00%	0 VA	TOTAL DEMAND AMPS:	122 A
Non-Continuous	5280 VA	100.00%	5280 VA		
Receptacle	4452 VA	100.00%	4452 VA		
NOTES:			BREAKER QUANTITIES (NEW ONLY)		
			(4) 20A / 1P, (30) 20A / 1P(G), (2) 20A / 1P(G) (LT), (3) 20A / 2P(G), (2) 30A / 2P(G), (2) 35A / 2P(G), (1) 35A / 3P(G)		

PANEL SCHEDULE LEGEND

*	=	WIRE SIZED TO COMPENSATE FOR VOLTAGE DROP
**	=	REFER TO DRAWINGS FOR SPECIFICATIONS
(#)	=	NEW CIRCUIT TO EXISTING CIRCUIT BREAKER
(->)	=	CONNECT BRANCH CIRCUIT, WHICH WAS DISCONNECTED FROM ANOTHER SOURCE AS PART OF SELECTIVE DEMOLITION, TO POLE SPACE(S) INDICATED, DETERMINE EXACT POLE ASSIGNMENT(S) BASED ON EXISTING COLOR-CODING OF THE BRANCH CIRCUIT CONDUCTOR INSULATION. PROVIDE NEW BREAKER IF REQUIRED.
(A)	=	PROVIDE ARC FAULT CIRCUIT INTERRUPTER (AFCI) CIRCUIT BREAKER
(AG)	=	PROVIDE COMBINATION ARC FAULT (AFCI) / GROUND FAULT (GFCI) CIRCUIT INTERRUPTER CIRCUIT BREAKER
(AT)	=	EXISTING FUSIBLE SWITCH/CIRCUIT BREAKER WITH NEW FUSES/TRIP RATING
(DO)	=	PROVIDE DRAW-OUT CIRCUIT BREAKER
(ERM)	=	PROVIDE ENERGY REDUCTION MAINTENANCE (REDUCED ENERGY) CIRCUIT BREAKER
(EX)	=	EXISTING CIRCUIT TO REMAIN
(F)	=	CIRCUIT FOR FURTURE USE. PROVIDE BREAKER INDICATED. LOAD SHOWN FOR REFERENCE ONLY.
(G)	=	PROVIDE GROUND-FAULT CIRCUIT INTERRUPTER (GFCI) CIRCUIT BREAKER
(GE)	=	PROVIDE GROUND-FAULT EQUIPMENT PROTECTION (GFEP) CIRCUIT BREAKER
(GS)	=	PROVIDE SPECIAL PURPOSE GROUND-FAULT CIRCUIT INTERRUPTER (SPGFCI) CIRCUIT BREAKER
(H)	=	PROVIDE HANDLE TIE
(L)	=	PROVIDE LOCK-ON DEVICE
(LI)	=	PROVIDE ELECTRONIC LONG AND INSTANTANEOUS ADJUSTABILITY
(LSI)	=	PROVIDE ELECTRONIC LONG, SHORT, AND INSTANTANEOUS ADJUSTABILITY
(LSIA)	=	PROVIDE ELECTRONIC LONG, SHORT, INSTANTANEOUS, AND GROUND-FAULT ALARM ADJUSTABILITY
(LSIG)	=	PROVIDE ELECTRONIC LONG, SHORT, INSTANTANEOUS, AND GROUND-FAULT ADJUSTABILITY
(LT)	=	PROVIDE LOCK-OUT/TAG-OUT DEVICE
SL	=	SEE THE SINGLE LINE DIAGRAM / SCHEDULE FOR WIRE SIZE AND VOLTAGE DROP
(ST)	=	PROVIDE SHUNT TRIP CIRCUIT BREAKER

PANEL SCHEDULE GENERAL NOTES

A. PROVIDE HACR RATED BREAKERS ON ALL MOTOR LOADS.
B. ALL CONDUCTORS SHOWN ARE COPPER.
C. ALL VOLTAGE DROP CALCULATIONS AND COMPENSATED WIRE SIZES ARE BASED ON RIGHT ANGLE CIRCUIT LENGTHS. ACTUAL VOLTAGE DROP MAY VARY BASED ON INSTALLED WIRE LENGTH.
D. VOLTAGE DROP CALCULATIONS AND WIRE SIZES SHOWN IN THE PANEL SCHEDULES ARE FOR HOMERUN CONDUCTORS ONLY. FOR CIRCUITS WITH MORE THAN 1 DEVICE, THESE SIZES ASSUME THE CONDUCTORS DOWNSTREAM OF THE HOMERUN DEVICE ARE THE MINIMUM SIZE REQUIRED BY THE NEC BASED ON THE RATING OF THE CIRCUIT. WHERE THIS IS NOT THE CASE, IT HAS BEEN INDICATED ON THE DRAWINGS. VOLTAGE DROP TO THE FARTHEST DEVICE HAS BEEN CALCULATED TO NEVER EXCEED 5%.
E. RECEPTACLE LOADS CALCULATED AT 100% OF FIRST 10kVA, 50% OF REMAINDER. MOTOR LOADS CALCULATED AT 125% OF THE LARGEST MOTOR, 100% OF ALL OTHER MOTORS.

KLH ENGINEERS
MECHANICAL/ELECTRICAL ENGINEERS
WWW.KLHENGRS.COM
KOHRS LONNEMANN HEIL ENGINEERS, INC.
444 SOUTH FRONT STREET
COLUMBUS, OHIO 43215
800-354-9783 614-228-2180
614-228-2183 FAX
FORT THOMAS, KENTUCKY
LEXINGTON, KENTUCKY
LOUISVILLE, KENTUCKY
NEW YORK, NEW YORK

PERMIT SET - FOR CONSTRUCTION

© 2022 STARBUCKS COFFEE COMPANY

STARBUCKS COFFEE COMPANY
2401 UTAH AVENUE SOUTH
SEATTLE, WASHINGTON 98134
(206) 318-1575

THESE DRAWINGS AND PROJECT MANUAL ARE CONFIDENTIAL AND SHALL REMAIN THE SOLE PROPERTY OF STARBUCKS CORPORATION, WHICH IS THE OWNER OF THE COPYRIGHT IN THIS WORK. THEY SHALL NOT BE REPRODUCED (IN WHOLE OR IN PART), SHARED WITH THIRD PARTIES OR USED IN ANY MANNER ON OTHER PROJECTS OR EXTENSIONS TO THIS PROJECT WITHOUT THE PRIOR WRITTEN CONSENT OF STARBUCKS CORPORATION. THESE DRAWINGS AND SPECIFICATIONS ARE INTENDED TO EXPRESS DESIGN INTENT FOR A PROTOTYPICAL STARBUCKS STORE (WHICH IS SUBJECT TO CHANGE AT ANYTIME) AND DO NOT REFLECT ACTUAL SITE CONDITIONS. NEITHER PARTY SHALL HAVE ANY OBLIGATION NOR LIABILITY TO THE OTHER (EXCEPT STATED ABOVE) UNTIL A WRITTEN AGREEMENT IS FULLY EXECUTED BY BOTH PARTIES.

STARBUCKS TEMPLATE VERSION i2022.10.23

Gensler
MAIN OFFICE
M. ARTHUR GENSLER JR. & ASSOCIATES
FL QUALIFIER'S LIC. NO. AR96486
45 FREMONT ST, SUITE 1500
SAN FRANCISCO, CA 94105 USA
Tel (415) 433.3700
Fax (415) 836.4599
SATELLITE OFFICE
10 NORTH PARK PLACE
SUITE 400
MORRISTOWN, NJ 07960 USA
Tel (973) 290.8500

PROJECT NAME:
ST LUCIE WEST & SW
CASHEMERE BLVD

PROJECT ADDRESS:
920 SW SAINT LUCIE BLVD,
PORT ST.LUCIE, FL 34986

STORE #: 81616
PROJECT #: 101357-001
ISSUE DATE: 06-27-2025
STORE DESIGNER:
DESIGN MANAGER: GENSLER
ENGINEER OF RECORD: KLH ENGINEERS

Revision Schedule

Rev	Date	By	Description

SHEET TITLE:
ELECTRICAL PANEL SCHEDULES
SCALE: AS SHOWN

SHEET NUMBER:
E602

ABBREVIATIONS

AFF	ABOVE FINISHED FLOOR
AHJ	AUTHORITIES HAVING JURISDICTION
APPROX	APPROXIMATE
BLDG	BUILDING
CO2	CARBON DIOXIDE
CD	CEILING DIFFUSER
CLG	CEILING
CONST	CONSTRUCTION
CXA	COMMISSIONING AGENT
DEG	DEGREES
DM	STARBUCKS DESIGN MANAGER
DN	DOWN
DTL	DETAIL
DWG(S)	DRAWING(S)
EA	EACH
EC	ELECTRICAL CONTRACTOR
ECP	EQUIPMENT CONTROL PAC
EG	EXHAUST GRILLE
ELEC	ELECTRICAL
EM	EMERGENCY
EMS	ENERGY MANAGEMENT SYSTEM
EXIST	EXISTING
EXT	EXTERIOR
F&I	FURNISH & INSTALL
FLR	FLOOR
FT	FOOT/FEET
G	GAS PIPING
GC	GENERAL CONTRACTOR
HR	HOUR
HVAC	HEATING, VENTILATION, AIR CONDITIONING
I.D.	INSIDE DIAMETER
IAQ	INDOOR AIR QUALITY
LCP	LIGHTING CONTROL PANEL
LL	LANDLORD
LV	LOW VOLTAGE
MAX	MAXIMUM
MC	MECHANICAL CONTRACTOR
MECH	MECHANICAL
MEP	MECHANICAL, ELECTRICAL AND PLUMBING
MFG	MANUFACTURER
MIN	MINIMUM
NTS	NOT TO SCALE
O.D.	OUTSIDE DIMENSION
OSA	OUTSIDE AIR
REF	REFERENCE
REQ'D	REQUIRED
REV	REVISION
RT	ROOFTOP
SF	SQUARE FEET
SHT	SHEET
SPECS	SPECIFICATION(S)
SST	STAINLESS STEEL
TEMP	TEMPORARY
TYP	TYPICAL
UNO	UNLESS NOTED OTHERWISE
WH	WATER HEATER
WSHP	WATER SOURCE HEAT PUMP

IAQ MANAGEMENT PLAN

DURING CONSTRUCTION, CONTRACTOR SHALL COMPLY WITH CHAPTER 3 OF SMACNA'S IAQ GUIDELINES FOR OCCUPIED BUILDINGS UNDER CONSTRUCTION. CONTRACTOR SHALL PERFORM AND SUBMIT ALL INFORMATION AS REQUIRED. IF HVAC SYSTEM IS TO BE USED DURING CONSTRUCTION, INSTALL MERV 8 FILTERS AT EACH RETURN AIR GRILL AND COMPLY WITH SMACNA'S GUIDELINES REFERENCED BELOW.

TESTING, ADJUSTING, BALANCING

INDEPENDENT AIR BALANCE CONTRACTOR OR QUALIFIED MECHANICAL CONTRACTOR SHALL BE QUALIFIED TO TAB WORK BY NEBB OR AABC STANDARDS. BALANCER SHALL ACCURATELY BALANCE THE SUPPLY, RETURN AND OUTSIDE AIR, EXHAUST FAN(S), HYDRONIC (WHERE APPLICABLE) AND EXHAUST FAN(S) SYSTEMS TO PROVIDE AIR AND WATER QUANTITIES WITHIN 10% PLUS MINUS OF THE VALUES INDICATED ON THE DRAWINGS AND IN THE SPECIFICATIONS. OPERATE AUTOMATIC CONTROLS SYSTEMS AND VERIFY SETPOINTS FOR THERMOSTATS, C02 SENSORS, DCV, EMS AND ECONOMIZER/OUTSIDE AIR DAMPER. SEE CONTROLS AND OPERATION NOTES AND HVAC SCHEDULES AND NOTES FOR DETAILS. IF DEFICIENCIES OR SITE CONDITIONS PREVENT COMPLETE AND PROPER BALANCING, DO NOT COMPLETE WORK AND SUBMIT A REQUEST FOR INFORMATION TO GET COMPLETE INFORMATION PRIOR TO COMPLETING WORK. SUBMIT THREE (3) COPIES OF THE BALANCE REPORT TO THE ENGINEER, CONSTRUCTION MANAGER AND COMMISSIONING AGENT FOR APPROVAL. THE BALANCE REPORT SHALL INCLUDE NEBB OR AABC CREDENTIALS, EQUIPMENT/INSTRUMENT LIST WIT THE MOST RECENT CALIBRATION DATE AND BALANCE REPORTS FOR ALL HVAC AND EXHAUST SYSTEMS. INCLUDE A COPY OF THE BALANCE REPORT AS APPROVED BY THE ENGINEER WITH APPLICATION FOR FINAL CONTRACT PAYMENT.

ENERGY MANAGEMENT SYSTEM (EMS)

THE GENERAL CONTRACTOR SHALL INSTALL (OR DEMO AND REINSTALL FOR RENOVATIONS) THE VENSTAR SURVEYOR EMS SYSTEMS PRIOR TO THE LAST WEEK OF CONSTRUCTION. GENERAL CONTRACTOR TO PROVIDE ONE PERMANENT THERMOSTAT AND REMOTE SENSOR PER HVAC UNIT. LOCATE AND MOUNT THERMOSTAT(S) AND SENSOR(S) PER THE DRAWINGS. PROVIDE THERMOSTAT IDENTIFICATION LABELS PER SPECIFICATION REQUIREMENTS.

GENERAL CONTRACTOR TO PROGRAM, START-UP AND COMMISSION THE CONTROL SYSTEM. GENERAL CONTRACTOR IS TO COMPLETE FINAL CONNECTION AFTER DATA RACK AND NETWORK INSTALLATIONS. GENERAL CONTRACTOR VENDOR TO VERIFY SYSTEM OPERATION AND TROUBLESHOOT IF REQUIRED. GENERAL CONTRACTOR TO COMPLETE SURVEYOR'S STARBUCKS INSTALLATION SURVEY FORM AND PROVIDE TWO (2) COMPLETED COPIES OF THIS DOCUMENT TO THE CONSTRUCTION MANAGER AND COMMISSIONING AGENT PRIOR TO FINAL PAYMENT.

CONTROLS AND OPERATION NOTES

THE GENERAL CONTRACTOR SHALL PROVIDE AND INSTALL THE FOLLOWING COMPONENTS:

CONTROL WIRING
THE MECHANICAL CONTRACTOR SHALL PROVIDE ALL CONTROL WIRING IN CONDUIT NECESSARY FOR THE COMPLETE AND PROPER OPERATING TEMPERATURE CONTROL SYSTEM INCLUDING ALL MODES OF OPERATION AND INTERLOCK.

EXHAUST FANS
RESTROOM EXHAUST FAN(S) TO BE OPERATED IN CONJUNCTION WITH STORE HOURS UNLESS OTHERWISE NOTED OR APPROVED OR AS REQUIRED BY JURISDICTION (COORDINATE WITH ELECTRICAL).

THERMOSTAT
PERMANENT THERMOSTAT(S) AND REMOTE SENSOR(S) SHALL BE FURNISHED AND INSTALLED. ONE THERMOSTAT AND SENSOR IS PROVIDED FOR EACH AIR HANDLING UNIT. MOUNT THERMOSTAT(S) AND SENSOR(S) IN LOCATION & HEIGHT AS INCUBATED ON DRAWINGS. MECHANICAL CONTRACTOR TO PROVIDE THERMOSTAT IDENTIFICATION LABELS PER SPECIFICATION REQUIREMENTS. REFER TO THERMOSTAT SETUP INSTRUCTIONS BELOW FOR ADDITIONAL REQUIREMENTS.

THERMOSTAT SETUP INSTRUCTIONS
PROVIDE THE FOLLOWING SETUP AND PROGRAMMING:

1. CONFIGURE AS FOLLOWS:
   - A. DEGREES "F" DISPLAY
   - B. 12 HOUR CLOCK
   - C. CONTINUOUS FAN OPERATION IN OCCUPIED MODE
   - D. DISABLE KEYBOARD PROGRAMMING
2. SET TIME AND DATE.
3. SET TO DISPLAY CURRENT TEMPERATURE.
4. SET OCCUPIED START TIME AT 30 MIN. BEFORE OPENING. SET UNOCCUPIED START TIME AT 30 MIN. AFTER CLOSING. VERIFY HOURS WITH STORE MANAGER OR CONSTRUCTION MANAGER.
5. SET POINTS SHALL BE AS FOLLOWS OR AS APPROPRIATE FOR CLIMATE:
   - A. OCCUPIED (5°F DEADBAND) (3°C DEADBAND)
     - I. HEATING: 70°F (21°C)
     - II. COOLING: 75°F (24°C)
   - B. UNOCCUPIED
     - I. HEATING: 60°F (15°C)
     - II. COOLING: 78°F (25°C)
6. SET TWO (2) HOUR OCCUPIED OVERRIDE FUNCTION TO PROVIDE THE FOLLOWING SET POINT OVERRIDES:
   - A. HEATING: +2°F (1°C)
   - B COOLING: -2°F (1°C)

DEMAND CONTROL VENTILATION (DCV)
THE C02 SENSOR SHALL MODULATE THE AIR HANDLING UNIT OUTSIDE AIR DAMPER TO MAINTAIN 1000 PPM C02 OR LESS

OCCUPIED MODE:

1. FAN SHALL RUN CONTINUOUSLY WHILE BRINGING IN MINIMUM DCV OUTSIDE AIR AS INDICATED IN SCHEDULE.
2. IF C02 SENSOR SET POINT IS BELOW THE SETPOINT, THE AIR DAMPER SHALL BE OPEN TO THE CALCULATED DCV MINIMUM OUTSIDE AIR.
3. IF C02 SENSOR SETPOINT IS EXCEEDED, OUTSIDE AIR DAMPER SHALL MODULATE TO MAINTAIN 1000 PPM NOT TO EXCEED THE CALCULATED DESIGN MINIMUM OUTSIDE AIR.
4. UPON C02 PPM FALLING BELOW THE SETPOINT, THE AIR DAMPER SHALL RETURN TO DCV MINIMUM OUTSIDE AIR.
5. THE ECONOMIZER SHALL HAVE PRIORITY OVER THE DCV CONTROLS, OUTSIDE AIR MAY EXCEED DCV MINIMUM AND DESIGN MINIMUM WHEN AIR CONDITIONS ARE APPROPRIATE TO DO SO.

UNOCCUPIED MODE:

1. FAN SHALL CYCLE WITH HEATING AND OUTSIDE AIR DAMPER CLOSED. OUTSIDE DAMPER SHALL NOT BE CYCLED WITH C02 PPM SETPOINT.

DUCTWORK AND ACCESSORIES

SHEET METAL DUCTWORK
SEE SPECIFICATIONS FOR SHEET METAL DUCT REQUIREMENTS. ALL EXPOSED DUCTWORK TO BE SPIRAL ROUND, OR RECTANGULAR LOCK-SEAM TYPE, AS SHOWN ON HVAC PLAN SHEET. ASSEMBLE AND INSTALL DUCTWORK IN ACCORDANCE WITH RECOGNIZED INDUSTRY PRACTICE FOR ACHIEVING AIR TIGHT (5% LEAKAGE) AND NOISELESS (NO OBJECTIONABLE NOISE) SYSTEMS, CAPABLE OF PERFORMING EACH INDICATED SERVICE. FURNISH AND INSTALL ALL REQUIRED DAMPERS, TRANSITIONS, CONNECTIONS TO AIR TERMINALS, AND OTHER ACCESSORIES NECESSARY FOR COMPLETE OPERATING SYSTEM. NO VARIATION OF DUCT CONFIGURATION OR SIZES WILL BE PERMITTED EXCEPT BY PERMISSION FROM THE ENGINEER.

DUCT SEALANT
SEAL ALL LONGITUDINAL AND TRANSVERSE JOINTS PER SPECIFICATIONS. COVER ALL FIELD JOINTS, JOINTS AROUND SPIN-IN FITTINGS, AND FASTENING SCREWS WITH MASTIC.

SUPPORTS
PROVIDE FASTENERS, ANCHORS, RODS, STRAPS, TRIM, AND ANGLES FOR SUPPORT OF DUCTWORK. SUPPORTS MUST COMPLY WITH LOCAL REGULATIONS AND CODE.

DAMPERS
PROVIDE VOLUME CONTROL DAMPERS WHERE INDICATED ON DRAWINGS AND AT POINTS ON LOW PRESSURE SUPPLY, RETURN, AND EXHAUST DUCTS WHERE BRANCHES ARE TAKEN FROM LARGER DUCTS. PROVIDE UL LISTED FIRE OR FIRE/SMOKE DAMPERS WHERE REQUIRED AND IN ACCORDANCE WITH NFPA AND LOCAL CODES. PROVIDE CONVENIENTLY LOCATED ACCESS DOORS OF AMPLE SIZE AND QUANTITY FOR SERVICING THE DAMPERS. PROVIDE MOTORIZED DAMPERS AT ALL INTAKE & EXHAUST BUILDING OPENINGS. COORDINATE WITH OTHER TRADES FOR ACCESS PANELS, POWER AND FIRE ALARM INTERFACES. SEE PROJECT MANUAL.

GRILLES, REGISTERS, AND DIFFUSERS
GRILLES, REGISTERS, AND DIFFUSERS SHALL BE AS SPECIFIED AND SHALL BE MECHANICAL CONTRACTOR SUPPLIED, UNLESS OTHERWISE NOTED. DIFFUSERS SHALL BE INSTALLED AS INDICATED ON THE DRAWINGS AND SCHEDULES. THE MECHANICAL CONTRACTOR SHALL PROVIDE ALL MISCELLANEOUS ITEMS NECESSARY FOR A COMPLETE AND PROPER INSTALLATION IN THE TYPE OF CEILING AND WALLS USED IN THIS PROJECT.

THERMAL INSULATION
PROVIDE EXTERNAL THERMAL INSULATION WITH AN INTEGRAL VAPOR BARRIER FACING OF SUFFICIENT THICKNESS TO MEET LOCAL ENERGY CODE REQUIREMENTS OR ASHRAE 90.1-2004, WHICHEVER IS MORE STRINGENT. PROVIDE INSULATION ON EXHAUST AND OUTSIDE AIR DUCTS, AND ON CONCEALED PORTIONS OF SUPPLY AND RETURN AIR DUCTS. DO NOT EXTERNALLY INSULATE EXPOSED DUCTWORK AND PORTIONS OF DUCTWORK THAT ARE INTERNALLY LINED WITH CODE REQUIRED THICKNESS. INTERNALLY INSULATE EXPOSED SUPPLY DUCTWORK IF POSSIBILITY OF CONDENSATION. INTERNALLY INSULATE EXTERIOR DUCTWORK PER CODE.

ACOUSTICAL DUCT LINER
UNLESS OTHERWISE INDICATED ON THE PLANS, PROVIDE 1" (25MM) ACOUSTICAL DUCT LINER IN SUPPLY AND RETURN DUCTWORK WITHIN 10'-0" (305CM) OF THE DISCHARGE AND INTAKE OF AIR HANDLING UNITS. INCREASE DUCT SIZE INDICATED ON PLANS AS NEEDED TO ACCOMMODATE LINER. LINER TO BE PROVIDED AND FASTENED TO DUCT WITH MECHANICAL LINER FASTENERS IN ACCORDANCE WITH SMACNA AND PROJECT MANUAL.

FLEXIBLE DUCTWORK
FLEXIBLE DUCT WORK SHALL ONLY BE INSTALLED AS SHOWN IN PLAN AND NOT ABOVE HARD LID CEILINGS. FLEXIBLE DUCTWORK SHALL NOT EXCEED 5'-0" (152CM) IN LENGTH AND TWO 45° ELBOWS. IT SHALL BE PULLED TAUT AND APPROPRIATELY FASTENED TO RIGID BRANCH DUCT & DIFFUSER. BENDS SHALL BE MINIMIZED AND WHERE NEEDED BE A FULL RADIUS BEND. SUPPORT BANDS SHALL BE INSTALLED SO AS TO NOT CRIMP FLEX DUCT. FLEXIBLE DUCTWORK SHALL MEET REQUIREMENTS.

HVAC EQUIPMENT AND MATERIALS

AIR HANDLING UNITS
AIR HANDLING UNITS SHALL BE AS SPECIFIED IN THE MECHANICAL SCHEDULE AND SHALL BE FURNISHED AND INSTALLED PER THE LEASE AGREEMENT. THE MECHANICAL CONTRACTOR IS RESPONSIBLE FOR COORDINATING DELIVERY, PROVIDING COMPLETE INSTALLATION INCLUDING CURBS, PIPING, VIBRATION ISOLATION, AND NECESSARY ACCESSORIES, AND PROVIDING WARRANTY.

FILTERS
IF OPERATING HVAC DURING CONSTRUCTION, PROVIDE THREE (3) SETS OF 2" (51MM) MERV6 PLEATED DISPOSABLE FILTERS (OR HIGHER RATING IF REQUIRED BY LEED). USE ONE SET UNTIL COMPLETION OF CONSTRUCTION. INSTALL ONE SET AT COMPLETION OF CONSTRUCTION (PRIOR TO TAB) AND DELIVER ONE SET OF MERV13 FILTERS TO STARBUCKS LABELED TO DENOTE THEIR RESPECTIVE AIR HANDLING UNIT.

EXHAUST FANS
EXHAUST FANS SHALL BE AS SPECIFIED AND PROVIDED PER THE LEASE AGREEMENT. THE MECHANICAL CONTRACTOR IS RESPONSIBLE FOR COORDINATING DISCHARGE LOCATION WITH NEW AND EXISTING VENTS AND INTAKES, PROVIDING COMPLETE INSTALLATION INCLUDING CURBS, BACKDRAFT DAMPER, DUCTWORK FROM RESTROOM GRILLE TO UNIT, NECESSARY ACCESSORIES AND PROVIDING WARRANTY.

AIR CURTAINS
AIR CURTAINS, WHEN REQUIRED, SHALL BE FURNISHED BY OWNER WITH WINDOW UNIT FROM READY-ACCESS AND INSTALLED BY THE GENERAL CONTRACTOR. COORDINATE WITH ELECTRICAL CONTRACTOR FOR LOCATION OF POWER CONNECTION.

NATURAL GAS PIPING
PROVIDE NATURAL GAS PIPING FROM GAS COMPANY METER TO EACH PIECE OF EQUIPMENT OR APPLIANCES IN ACCORDANCE WITH CODE AND THE PROJECT MANUAL. PRESSURE REGULATORS FOR MEDIUM PRESSURE SYSTEMS SHALL BE VENTED TO THE OUTDOORS. PROVIDE PIPING SUPPORT BLOCKING ON ROOF, COMPATIBLE WITH ROOFING SYSTEM.

BRACING AND ANCHORING
ALL MECHANICAL EQUIPMENT, FIXED OR FLEXIBLY MOUNTED, SHALL BE BRACED OR ANCHORED TO COMPLY WITH LOCAL CODES.

GENERAL MECHANICAL NOTES

1. MECHANICAL CONTRACTOR SHALL COORDINATE WITH THE GENERAL CONTRACTOR TO PATCH AND REPAIR ALL EXISTING WALLS, FLOORS, CEILINGS OR OTHER SURFACES IDENTIFIED TO REMAIN THAT MAY BECOME DAMAGED DURING THE COURSE OF WORK.
2. DRAWINGS ARE DIAGRAMMATIC AND INDICATE GENERAL INTENT OR ARRANGEMENT OF SYSTEM(S). FURNISH & INSTALL ALL COMPONENTS NEEDED WHETHER INDICATED OR NOT TO PROVIDE A COMPLETE AND OPERATING SYSTEM.
3. CONTRACTOR TO VERIFY ALL DIMENSIONS, INCLUDING CLEARANCES REQUIRED BY OTHER TRADES, AND NOTIFY STARBUCKS CONSTRUCTION MANAGER OF ANY DISCREPANCIES PRIOR TO PROCEEDING WITH THE WORK. ALL DIMENSIONS ARE TO THE FACE OF THE FINISHED SURFACE UNLESS NOTED OTHERWISE. ALL DIMENSIONS TO BE TAKEN FROM ACTUAL BUILDING DIMENSIONS.
4. THE MECHANICAL CONTRACTOR SHALL COORDINATE HVAC WORK WITH OTHER TRADES. THE ARCHITECTURAL DRAWINGS AND PROJECT MANUAL SHALL TAKE PRECEDENCE OVER ALL OTHER DRAWINGS. SEE ARCHITECTURAL DRAWINGS AND PROJECT MANUAL FOR DIMENSIONED DIFFUSER LOCATIONS AND MOUNTING HEIGHTS WHERE EXPOSED.
5. NEW DUCTWORK AND EQUIPMENT SHALL NOT BE INSTALLED WHERE IT OBSTRUCTS ANY EXISTING OR NEW AREAS THAT REQUIRE ACCESS.

KLH ENGINEERS
MECHANICAL/ELECTRICAL ENGINEERS
WWW.KLHENGRS.COM
KOHRS LONNEMANN HEIL ENGINEERS, INC.
444 SOUTH FRONT STREET
COLUMBUS, OHIO 43215
800-354-9783 614-228-2180
614-228-2183 FAX
FORT THOMAS, KENTUCKY
LEXINGTON, KENTUCKY
LOUISVILLE, KENTUCKY
NEW YORK, NEW YORK

PERMIT SET - FOR CONSTRUCTION

© 2022 STARBUCKS COFFEE COMPANY

STARBUCKS COFFEE COMPANY
2401 UTAH AVENUE SOUTH
SEATTLE, WASHINGTON 98134
(206) 318-1575

THESE DRAWINGS AND PROJECT MANUAL ARE CONFIDENTIAL AND SHALL REMAIN THE SOLE PROPERTY OF STARBUCKS CORPORATION, WHICH IS THE OWNER OF THE COPYRIGHT IN THIS WORK. THEY SHALL NOT BE REPRODUCED (IN WHOLE OR IN PART), SHARED WITH THIRD PARTIES OR USED IN ANY MANNER ON OTHER PROJECTS OR EXTENSIONS TO THIS PROJECT WITHOUT THE PRIOR WRITTEN CONSENT OF STARBUCKS CORPORATION. THESE DRAWINGS AND SPECIFICATIONS ARE INTENDED TO EXPRESS DESIGN INTENT FOR A PROTOTYPICAL STARBUCKS STORE (WHICH IS SUBJECT TO CHANGE AT ANYTIME) AND DO NOT REFLECT ACTUAL SITE CONDITIONS. NEITHER PARTY SHALL HAVE ANY OBLIGATION NOR LIABILITY TO THE OTHER (EXCEPT STATED ABOVE) UNTIL A WRITTEN AGREEMENT IS FULLY EXECUTED BY BOTH PARTIES.

STARBUCKS TEMPLATE VERSION |2022.10.23

Gensler
MAIN OFFICE
M. ARTHUR GENSLER JR. & ASSOCIATES
FL QUALIFIER'S LIC. NO. AR96486
45 FREMONT ST, SUITE 1500
SAN FRANCISCO, CA 94105 USA
Tel (415) 433.3700
Fax (415) 836.4599
SATELLITE OFFICE
10 NORTH PARK PLACE
SUITE 450
MORRISTOWN, NJ 07960 USA
Tel (973) 290.8500

PROJECT NAME:
ST LUCIE WEST & SW CASHEMERE BLVD

PROJECT ADDRESS:
920 SW SAINT LUCIE BLVD,
PORT ST.LUCIE, FL 34986

STORE #:	81616
PROJECT #:	101357-001
ISSUE DATE:	06-27-2025
STORE DESIGNER:	ASHLEY SUEIRAS
DESIGN MANAGER:	GENSLER
ENGINEER OF RECORD:	KLH ENGINEERS

Revision Schedule

Rev	Date	By	Description

SHEET TITLE:
MECHANICAL NOTES

SCALE: AS SHOWN

SHEET NUMBER:
M001

MECHANICAL LEGEND

SYMBOL	DESCRIPTION
MECHANICAL AIR DEVICES	
SR	SUPPLY REGISTER
RR	RETURN REGISTER
ER	EXHAUST REGISTER
CD	CEILING DIFFUSER
CD-10"Ø	2'x2' SQUARE CEILING DIFFUSER WITH 10" NECK
	LINEAR SLOT DIFFUSER
MECHANICAL DUCTWORK	
UP	SUPPLY DUCT WITH ELBOW TURNED UP
DN	SUPPLY DUCT WITH ELBOW TURNED DOWN
UP	RETURN DUCT WITH ELBOW TURNED UP
DN	RETURN DUCT WITH ELBOW TURNED DOWN
UP	EXHAUST DUCT WITH ELBOW TURNED UP
DN	EXHAUST DUCT WITH ELBOW TURNED DOWN
24X12 SA	SUPPLY DUCT
24X12 RA	RETURN DUCT
24X12 EA	EXHAUST DUCT
	FLEXIBLE DUCTWORK CONNECTION
	REDUCER, CONCENTRIC
	REDUCER, NONCONCENTRIC
MECHANICAL DUCTWORK ACCESSORIES	
	DUCT WITH MANUAL VOLUME DAMPER
	ROUND ELBOW WITH TURNING VANES
	ELBOW WITH TURNING VANES
M	MOTOR OPERATED DAMPER - LINE VOLTAGE
M	MOTOR OPERATED DAMPER - LOW VOLTAGE
S	DUCT MOUNTED SMOKE DETECTOR (HARD WIRE INTERLOCK TO FAN MOTOR BY E.C.) FURNISHED BY E.C., INSTALLED BY M.C.
MECHANICAL STATS & SENSORS	
TS	TEMPERATURE SENSOR
T	LOW VOLTAGE THERMOSTAT
CO2	CARBON DIOXIDE SENSOR
MECHANICAL MISCELLANOUS	
UC 0'-1"	1" DOOR UNDERCUT

SYSTEM COMMISSIONING

CONTRACTOR RESPONSIBILITIES FOR BUILDING COMMISSIONING

CONTRACTOR SHALL PROVIDE SUPPORT AND WORK AS SPECIFIED, NEEDED AND REQUIRED TO CONDUCT AND FACILITATE STARBUCKS STAFF BUILDING COMMISSIONING EFFORTS. THIS WORK WILL BE COMPRISED OF THREE DISTINCT EFFORTS:

1. SUPPORT STARBUCKS COMMISSIONING AGENT (CXA) DURING INSTALLATION VERIFICATION AND CORRECT DISCLOSED DEFICIENCIES.
2. PERFORM TESTING, ADJUSTING, BALANCING AND SYSTEM STARTUP AND SUPPORT FUNCTIONAL PERFORMANCE TESTING BY STARBUCKS CXA;
3. CORRECT DEFICIENCIES DISCLOSED BY FUNCTIONAL PERFORMANCE TESTING AND SUBMIT REPORTS.

CONTRACTOR SHALL PERFORM AND PROVIDE THE FOLLOWING:

A. SYSTEMS SUBJECT TO COMMISSIONING MAY INCLUDE , BUT ARE NOT LIMITED TO DOMESTIC HOT WATER GENERATION, HVAC SYSTEMS, ROOFTOP UNITS, EXHAUST FANS, HVAC CONTROLS, LIGHTING CONTROLS, AIR CURTAINS, BUILT-IN REFRIGERATION, EQUIPMENT AND RENEWABLE ENERGY SYSTEMS.

B. CONTRACTOR SHALL PROVIDE WRITTEN RESPONSES TO ALL CXA'S REVIEWS AND COMMENTS. RESPONSES SHALL BE PROVIDED IN A TIMELY MANNER.

C. CONTRACTOR SHALL INCLUDE COMMISSIONING ACTIVITIES IN PROJECT SCHEDULE AND SHOW INTERVALS FOR PERFORMANCE OF WORK FOR WHICH CONTRACTOR IS RESPONSIBLE AND INTERVALS FOR WORK PERFORMED BY STARBUCKS CXA. CONTRACTOR SHALL SHOW RESOURCES FOR PERFORMING ALL WORK RELATED TO COMMISSIONING ACTIVITIES ON A LINE ITEM IN THE SCHEDULE OF VALUES.

D. CONTRACTOR SHALL INSTALL EQUIPMENT IN ACCORDANCE WITH THE MANUFACTURER'S REQUIREMENTS AND ALL CONTRACT DOCUMENTS. ENSURE THAT ALL EQUIPMENT IS INSTALLED TOTALLY COMPLETE AND ACCESSIBLE TO STARBUCKS CXA FOR INSTALLATION VERIFICATION AND FUNCTIONAL PERFORMANCE TESTING PRIOR TO THE SCHEDULED START OF INSTALLATION VERIFICATION.

E. CONTRACTOR SHALL COMPLETE MANUFACTURER'S STARTUP PROCEDURES PRIOR TO COMMISSIONING COORDINATION WITH CXA.

F. CONTRACTOR SHALL BE READILY AVAILABLE DURING INSTALLATION VERIFICATION TO CORRECT ANY DEFICIENCIES OR DEFECTS IS CLOSED BY THE INSTALLATION VERIFICATION PROCESS. CORRECTIONS SHALL BE MADE IN A TIMELY MANNER WITHOUT DISRUPTION OF THE CONSTRUCTION SCHEDULE.

G. ALL HVAC EXHAUST FAN AND AIR CURTAIN EQUIPMENT SHALL BE TESTED, ADJUSTED AND BALANCED BY THE CONTRACTOR'S TESTING, ADJUSTING AND BALANCE AGENT (SEE TESTING ADJUSTING AND BALANCING) AFTER THE SYSTEM IS VERIFIED TO BE COMPLETE AND CORRECT BY STARBUCKS CXA, IN ACCORDANCE WITH THE REQUIREMENTS OF THESE DOCUMENTS. ALL HVAC CONTROL SYSTEMS SHALL BE TESTED TO ENSURE THAT CONTROL DEVICES, COMPONENTS, EQUIPMENT AND SYSTEMS ARE CALIBRATED, ADJUSTED AND OPERATE IN ACCORDANCE WITH THESE PLANS AND SPECIFICATIONS. SEQUENCES OF OPERATION SHALL BE TESTED TO ENSURE THAT THEY OPERATE IN ACCORDANCE WITH THE CONTRACT REQUIREMENTS. DELIVERABLES: PRELIMINARY, WRITTEN TESTING AND AIR BALANCE REPORT CONFORMING TO THE REQUIREMENTS SPECIFIED HEREIN, DOCUMENTING THE INFORMATION SPECIFIED, ETC... TO THE STARBUCKS CXA IMMEDIATELY UPON COMPLETION OF THE WORK.

H. PROVIDE A LIST OF ALL FACTORY AND FIELD SETTINGS THAT HAVE BEEN PROGRAMMED INTO THE EQUIPMENT (SUCH AS SETPOINTS, SCHEDULES, DIP SWITCH SETTINGS, CONDENSER AND EVAPORATOR OPERATING PRESSURE/TEMPERATURE, ETC...).

I. CONTRACTOR SHALL INFORM STARBUCKS CXA WHEN EQUIPMENT IS READY FOR FUNCTIONAL PERFORMANCE TESTING. ALL EQUIPMENT SHALL BE READY FOR FUNCTIONAL PERFORMANCE TESTING PRIOR TO STARTING TESTING. THIS INCLUDES REHEARSING ALL FUNCTIONAL PERFORMANCE TESTS BEFORE DEMONSTRATING TO THE CXA. CONTRACTOR SHALL OPERATE EQUIPMENT FOR STARBUCKS CXA AND VERIFY BY DEMONSTRATING THE CORRECT OPERATION OF EQUIPMENT, SENSOR CALIBRATION, RESPONSE OF ACTUATORS AND PROPER EXECUTION OF HVAC CONTROL AND LIGHTING SEQUENCES, INCLUDING BUT NOT LIMITED TO AIR MOVEMENT, TEMPERATURE, SOUND AND CONTROL RESPONSE. PROVIDE ANY SECURITY ACCESS, HARDWARE, SOFTWARE OR OTHER SUPPORT AS NEEDED FOR THE STARBUCKS CXA TO EFFICIENTLY WITNESS AND DOCUMENT ALL EQUIPMENT TESTING. STARBUCKS CXA WILL RECORD THE EQUIPMENT OPERATION AND RESPONSE TO TESTING SEQUENCES AND PREPARE A LIST OF ANY DEFICIENCIES DISCLOSED BY THE FUNCTIONAL PERFORMANCE TESTS FOR CORRECTION BY THE CONTRACTOR. EQUIPMENT INCLUDES, BUT IS NOT LIMITED TO, AIR HANDLING UNITS, ROOFTOP AND SPLIT TYPE, CONDENSING UNITS, EXHAUST FANS, LIGHTING CONTROLS, ETC... DELIVERABLES: PROVIDE COMPLETED COPIES OF ALL START UP REPORTS, FILLED OUT ON THE MANUFACTURER'S FORMS, TO THE STARBUCKS CXA.

J. CONTRACTOR IS RESPONSIBLE FOR CORRECTING ANY ISSUES OR DEFICIENCIES DISCLOSED DURING THE FUNCTIONAL PERFORMANCE TESTING PROCESS. CORRECTIONS SHOULD BE MADE IN A TIMELY MANNER WITHOUT DISRUPTION TO THE SYSTEM AND CONSTRUCTION SCHEDULE.

K. CONTRACTOR SHALL BE READILY AVAILABLE FOR ANY RE-TESTING OF EQUIPMENT DEEMED NECESSARY BY STARBUCKS CXA DURING INSTALLATION VERIFICATION AND FUNCTIONAL PERFORMANCE TESTING. CONTRACTOR IS RESPONSIBLE FOR CORRECTING ANY ISSUES OR DEFICIENCIES FOUND IN THE SYSTEM DURING ANY AND ALL RE-TESTING. CORRECTIONS SHOULD BE MADE IN A TIMELY MANNER WITHOUT DISRUPTION TO THE SYSTEM AND CONSTRUCTION SCHEDULE. DELIVERABLES: FINAL BALANCE REPORT, DEFICIENCIES LIST NOTING CORRECTIVE ACTIONS PERFORMED BY CONTRACTOR IN RESPONSE TO INSTALLATION VERIFICATION AND FUNCTIONAL PERFORMANCE TEST RESULTS.

L. CONSTRUCTION AND POST CONSTRUCTION TESTING: ADDITIONAL TESTING MAY BE REQUIRED BY LEED AND OTHER PROCESSES THAT MAY OCCUR OUT OF SEQUENCE WITH COMMISSIONING SERVICE. CONTRACTOR SHALL CONDUCT. DOCUMENT, SUPPORT AND SCHEDULE THIS TESTING AS DIRECTED BY STARBUCKS CXA.

M. CONTRACTOR SHALL PROVIDE A TRAINING PLAN FOR EACH TRADE (MECHANICAL, ELECTRICAL, PLUMBING, RENEWABLE SYSTEMS) FOR THE CXA'S APPROVAL. THE TRAINING PLAN SHALL OUTLINE ALL THE TOPICS THAT ARE TO BE COVERED ALONG WITH THE TIME DURATION FOR EACH TOPIC. IT SHALL ALSO INCLUDE THE INSTRUCTOR'S NAME, QUALIFICATIONS AND COMPANY LOGO.

N. THE CONTRACTOR IS RESPONSIBLE FOR RECORDING ATTENDANCE FOR EACH TRAINING SESSION. COPIES OF THESE SHALL BE SUBMITTED TO THE CXA.

O. CONTRACTOR SHALL SUBMIT O&M MANUALS FOR ALL PIECES OF EQUIPMENT AT LEAST 6 WEEKS IN ADVANCE OF THE TRAINING SESSIONS.

KLH ENGINEERS

MECHANICAL/ELECTRICAL ENGINEERS

WWW.KLHENGRS.COM

KOHRS LONNEMANN HEIL ENGINEERS, INC.

444 SOUTH FRONT STREET
COLUMBUS, OHIO 43215
800-354-9783 614-228-2180
614-228-2183 FAX

FORT THOMAS, KENTUCKY
LEXINGTON, KENTUCKY
LOUISVILLE, KENTUCKY
NEW YORK, NEW YORK

PERMIT SET - FOR CONSTRUCTION

© 2022 STARBUCKS COFFEE COMPANY

STARBUCKS COFFEE COMPANY
2401 UTAH AVENUE SOUTH
SEATTLE, WASHINGTON 98134
(206) 318-1575

THESE DRAWINGS AND PROJECT MANUAL ARE CONFIDENTIAL AND SHALL REMAIN THE SOLE PROPERTY OF STARBUCKS CORPORATION, WHICH IS THE OWNER OF THE COPYRIGHT IN THIS WORK. THEY SHALL NOT BE REPRODUCED (IN WHOLE OR IN PART), SHARED WITH THIRD PARTIES OR USED IN ANY MANNER ON OTHER PROJECTS OR EXTENSIONS TO THIS PROJECT WITHOUT THE PRIOR WRITTEN CONSENT OF STARBUCKS CORPORATION. THESE DRAWINGS AND SPECIFICATIONS ARE INTENDED TO EXPRESS DESIGN INTENT FOR A PROTOTYPICAL STARBUCKS STORE (WHICH IS SUBJECT TO CHANGE AT ANYTIME) AND DO NOT REFLECT ACTUAL SITE CONDITIONS. NEITHER PARTY SHALL HAVE ANY OBLIGATION NOR LIABILITY TO THE OTHER (EXCEPT STATED ABOVE) UNTIL A WRITTEN AGREEMENT IS FULLY EXECUTED BY BOTH PARTIES.

STARBUCKS TEMPLATE VERSION i2022.10.23

Gensler

MAIN OFFICE
M. ARTHUR GENSLER JR. & ASSOCIATES
FL QUALIFIER'S LIC. NO. AR96486
45 FREMONT ST, SUITE 1500
SAN FRANCISCO, CA 94105 USA
Tel (415) 433.3700
Fax (415) 836.4599

SATELLITE OFFICE
10 NORTH PARK PLACE
SUITE 400
MORRISTOWN, NJ 07960 USA
Tel (973) 290.8500

PROJECT NAME:
ST LUCIE WEST & SW CASHEMERE BLVD

PROJECT ADDRESS:
920 SW SAINT LUCIE BLVD,
PORT ST.LUCIE, FL 34986

STORE #: 81616
PROJECT #: 101357-001

ISSUE DATE: 06-27-2025

STORE DESIGNER: ASHLEY SUEIRAS
DESIGN MANAGER: GENSLER
ENGINEER OF RECORD: KLH ENGINEERS

Revision Schedule

Rev	Date	By	Description

SHEET TITLE:
MECHANICAL NOTES

SCALE: AS SHOWN

SHEET NUMBER:
M002

SECTION 23 05 01.00 – COMMON REQUIREMENTS FOR HVAC
General
General Provisions of the Contract including General and Supplementary Conditions and General Requirements apply to work of this section.
Scope
The base bid includes furnishing all materials, labor, tools, and equipment and the performance of all work required to install a complete heating and air conditioning system as outlined herein.
Guarantee
The contractor shall provide a guarantee in written form stating that all work under this section shall be free of defective work, materials, or parts for a period of one year from the date of owner's final acceptance and shall repair, revise or replace at no cost to the owner any such defects occurring within the guarantee period. Contractor shall also state in written form that any items or occurrences arising during the guarantee period will be attended to in a timely manner and will in no case exceed four (4) working days from date of notification by owner.
Quality Assurance
Provide a complete installation in conformance with the following standards.
AGA: American Gas Association
ASHRAE: American Society of Heating, Refrigerating and Air Conditioning Engineers
NFPA: National Fire Protection Association
SMACNA: Sheet Metal and Air Conditioning Contractors National Association.
Statewide Building Code
IMC: International Mechanical Code
Permits, Fees, Inspections, Laws and Regulations
Permits and fees of every nature required in connection with this work shall be obtained and paid for by this contractor who shall also pay for all the installation fees and similar charges. Laws and regulations, which bear upon or affect the various branches of this work shall be complied with by this contractor and are hereby made a part of this contract. All work, which such laws require to be inspected, shall be submitted to the proper public official for inspection and a certificate of final approval must be furnished.
Work in Existing Spaces
General: Care shall be taken when working in existing spaces so as not to damage existing walls and ceilings where work is being performed.
Ceilings: Where work is being performed above ceilings, and the architectural drawings do not indicate ceiling modifications by the general contractor, it shall be the responsibility of this contractor to remove and replace existing ceilings where work is being performed. In those instances, all repair and installation of new grid, ceiling panels, etc shall be the responsibility of this contractor.
Match existing finishes.
Walls & Floors: It shall be the responsibility of this contractor to patch existing walls and floors and match existing finishes where work is being removed or installed and patching is being performed, unless noted otherwise on the architectural drawings.
Tests and Adjustments
No ducts, piping, fixtures or equipment shall be concealed or covered until they have been inspected and approved by the Architect and the inspector who shall be notified by the contractor when the work is ready for inspection.
Work shall be completely installed, tested and leak tight before inspection is required. All tests shall be repeated to the satisfaction of those making the inspection.
Architectural coordination items
Cutting and Patching: Cut and drill all openings in walls and floors required for the installation. Secure approval of Engineer before cutting and drilling. Neatly patch all openings cut.
Fire Caulking: Patching through fire rated walls and enclosures shall not diminish the rating of that wall or enclosure. Patch shall be equal to rockwool, firestop, caulk or approved "rated" patch.
Access Panels and Pathways: Furnish all access panels required for proper servicing of equipment. Provide access panels for all concealed valves, vents, controls, cleanout doors, and sprinkler devices required by NFPA. Provide access panels for all fire and/or fire & smoke dampers. Provide frame as required for finish. Furnish panels to General Contractor. Exact locations to be approved by the Architect. Minimum size to be 12" x 12", units to be 16 gauge steel, locking device shall be screwdriver cam locks.
project conditions
Where new HVAC systems are required to be connected to existing HVAC systems, it is the contractor's responsibility to verify the location, size, pressure, condition, and they shall verify that the existing HVAC system is indeed the correct and appropriate HVAC system before any work is done. Provide all necessary camera scoping and dye testing as necessary. If there is any need for concern, if it is determined that the existing HVAC system is not a correct or appropriate HVAC system or not connected to a correct or appropriate HVAC system, if the condition of the existing HVAC system is not viable for re-use, or any other condition that would not allow the proper functioning of the new HVAC system, the contractor shall notify the engineer in writing immediately via RFI and wait for direction before proceeding.
MECHANICAL EQUIPMENT COMMON REQUIREMENTS
INSPECTION
Examine areas and conditions under which mechanical equipment is to be installed. Do not proceed with work until unsatisfactory conditions have been corrected in manner acceptable to Installer.
Uncrate equipment and inspect for damage. Verify that nameplate data corresponds with unit designation.
INSTALLATION
General: Install mechanical equipment as indicated, and in accordance with manufacturer's installation instructions.
Location: Install each unit level/plum and accurately in position indicated in relation to other work; and maintain sufficient clearance for normal service and maintenance, but in no case less than that recommended by manufacturer.
Coordinate with other trades to assure correct recess size for recessed units.
Protect interior mechanical equipment with protective covers during balance of construction.
For ducted equipment, connect ductwork to units with flexible duct connections. Provide transitions to exactly match unit duct connection size. Provide 1" acoustic duct lining on return air side a minimum of 10' from fan.
Piping: Restrictors or piping changes shall be made as necessary to achieve manufacturers recommended pressure drops. The findings shall be reported to the engineer at project closeout.
Provide trap at drain piping connection to unit sized per manufacturer's recommendations.
Access: Provide access space around and over mechanical equipment for service as indicated, but in no case less than that recommended by manufacturer or required by code in effect.
Access Panels: Furnish all access panels required for proper servicing of equipment. Provide access panels for all concealed valves, vents, controls and cleanout doors, and sprinkler devices required by NFPA. Provide frame as required for finish. Furnish panels to General Contractor. Exact locations to be approved by the Architect. Minimum size to be 12" x 12", units to be 16 gauge steel, locking device shall be screwdriver cam locks.
Rooftop mechanical equipment shall be installed a minimum of 10'-0" from any roof edge regardless of location indicated on plans, unless a screen wall or railing is installed per the local building code. See the architectural plans for coordination.
Roof Curbs: Furnish roof curbs to roofing Installer for installation. Install and secure roof curb to roof structure, in accordance with National Roofing Contractor's Association (NRCA) installation recommendations and shop drawings. Install and secure units on curbs and coordinate roof penetrations and flashing. Install according to roofing manufacturer's recommendation and specifications.
Rooftop supports: Provide rooftop equipment rails for mechanical equipment located on the roof that spans two or more bar joists. Verify roof structure, mounting supports, and membrane installations are completed to the proper point to allow installation of roof mounted units.
Indoor Suspended Equipment: Install suspended from structure with all threaded rod and vibration isolators.
ELECTRICAL COORDINATION ITEMS
Electrical Wiring: Install electrical devices furnished by manufacturer but not specified to be factory-mounted. Furnish copy of manufacturer's wiring diagram submittal to Electrical Installer.
Verify that electrical wiring installation is in accordance with manufacturer's submittal and installation requirements of Division 26 sections. Do not proceed with equipment start-up until wiring installation is acceptable to equipment installer.
Install electric heating terminal units including components in accordance with equipment manufacturer's written instructions, and with recognized industry practices; complying with applicable installation requirements of NEC and NECA's "Standard of Installation".
Tighten connectors and terminals, including screws and bolts, in accordance with equipment manufacturer's published torque tightening values for equipment connectors. Where manufacturer's torquing requirements are not indicated, tighten connectors and terminals to comply with tightening torques specified in UL Std 486A.
Grounding: Provide equipment grounding connections for electric heating terminals as indicated. Tighten connections to comply with tightening torque values specified in UL Std 486A to assure permanent and effective grounding.
FIELD QUALITY CONTROL
Testing: After installation has been completed, test to demonstrate proper operation of mechanical equipment at performance requirements specified. When possible, field correct malfunctioning units, then retest to demonstrate compliance. Replace units, which cannot be satisfactorily corrected. Test controls and demonstrate compliance with requirements.
Cleaning: After construction is completed, including painting, clean unit exposed surfaces, vacuum clean coils and inside of cabinets. Clean factory-finished surfaces. Repair any marred or scratched surfaces with manufacturer's touch-up paint.
START-UP
Provide the services of a factory-authorized service representative to start-up rooftop units, in accordance with manufacturer's written start-up instructions. Test controls and demonstrate compliance with requirements. Replace damaged or malfunctioning controls and equipment.
TRAINING OF OWNER'S PERSONNEL
Provide services of manufacturer's technical representative for 1-half day to instruct Owner's personnel in operation and maintenance of units. Schedule training with Owner, provide at least 7-day notice to Contractor and Engineer of training date.
SPARE PARTS
Provide one complete extra set of filters for each unit. Install new filters at completion of system work, and prior to testing, adjusting, and balancing work. Obtain receipt from Owner that new filters have been installed.

SECTION 23 05 03.00 – SUBMITTALS FOR HVAC
General
Where submittals are required by the Contract Documents, they shall be prepared and supplied in accordance with the Contract Documents. In addition to Division 01, the Contractor is advised to review and comply with the requirements articulated within each Division and within each section of that Division.
Some Divisions may include a division-specific "Submittal Requirements for …." section. Where this section exists, it articulates additional requirements for submittals that apply to the work of that Division.
The following requirements help to identify, track and keep the project organized for all parties involved. They are necessary to ensure a timely turnaround and an appropriate technical review. Submittals that do not conform to the administrative requirements are rejected and returned, without technical review.
Requirements
Supply submittals for each section: Submittals shall be supplied on a section-by-section and type-by-type basis. For example, independent product data submittals shall be furnished for each section that requires product data submittals. Independent shop drawing submittals shall be furnished for each section that requires shop drawings. Refer to the specifications for identification of which submittals are required for the project. Separate PDF file packages shall be supplied for each section, for each submittal type, where electronic submittals are required. Each PDF shall represent a single standalone submittal. Separately bound and identified submittals shall be provided where hardcopies are required.
Include a transmittal: Transmittals shall enumerate each submittal for each section of each type and iteration.
Include cover sheet / title page: The cover sheet shall include the information identified in the contract documents. It shall be included as the first page of each electronic and/or hardcopy document-based submittal. An editable and printable PDF form created with editable fields and specification compliant appearance is available from KLH upon request. It is also downloadable from the KLH website at www.klhengrs.com.
Include an index: The index shall enumerate the contents of the submittal.
Include checklists: Where checklists are included with the specifications, complete and include them within the appropriate submittal. Supply complete submittals: Complete submittals of each type are required. Partial submittals will be rejected. Where a section requires a product data submittal, all product data for that section shall be supplied together, at one time, as one complete submittal. Do not send half the product data as one submittal and the other half as a separate one. When resubmittal is required (e.g. Revise and Resubmit) the revised submittal shall be more complete, more accurate and more contract-compliant than its rejected predecessor. The submittal number (for each section and type) shall increment for each subsequent submittal (00 – Original submission, 01 – First Resubmission, 02 – Second Resubmission, etc…). Resubmittals shall include a copy of the reviewer's comments supplied with the prior submittal rejection and shall be amended with a description of the specific action taken to comply with the reviewer's comments. The absence of this on resubmittal is cause for rejection.
Name electronic files to match the submittal ID and cover sheet: The electronic file name of submittals shall match the submittal ID included on the submittals cover page. For example: The original/first product data submittal for Section 234116 would be labeled "234116.00-PD-00"; the first resubmittal of same shall be labeled "234116.00-PD-01". The original/first shop drawings submittal file for the same section would be labeled "234116.00-SD-00"; the first resubmittal of same shall be labeled "234116.00-SD-01".
Use of Electronic Drawings from the Owner's Design Team
Plan drawings for the Project were created with AutoCAD and Revit.
If expressly permitted by the Owner and the terms of the Contract, editable electronic versions of standard-scale, AutoCAD-based plan drawings may be made available for the creation of shop and as-built drawings.
Upon request when available, electronic versions of standard-scale, Navisworks (.dwf) and (.nwc) or AutoCAD 36 (.dwg) files may be made available for coordination purposes.
Due to the proprietary nature of internal design systems, editable native-software versions of some drawings, including but not limited to system diagrams and details will not be made available in an editable form. In these cases, electronic versions of the drawings may be made available only in PDF, JPG or similar non-editable electronic form, at the sole discretion of the Design Professional.
The Request Drawings form can be accessed, filled out and submitted at the following internet address (scroll down to bottom of home page): http://www.klhengrs.com.

SECTION 23 05 29.00 – HANGERS AND SUPPORTS FOR HVAC PIPING AND EQUIPMENT

Submittal Requirements
Product Data: For each type of product indicated.
Shop Drawings: Fabrication and installation details.

General
Support all piping, ductwork and equipment by hangers or brackets properly from the building structure. Support from decking above is prohibited. Furnish structural steel members where required to support piping and equipment. No portion of piping or valves shall be supported by equipment.
Ductwork - Support by means of hangers as follows:

Duct Width	Hanger Size and Type	Max. Spacing
30 or less	(#16 gage)	8
31 to 60	(#14 gage)	8

A pair of hangers shall be located at every transverse joint and elsewhere according to the table.
Piping
Install hangers, supports, clamps and attachments to support piping properly from building structure. Arrange for grouping of parallel runs of horizontal piping supported together on field-fabricated, heavy-duty trapeze hangers where possible. Where piping of various sizes is supported together by trapeze hangers, space hangers for smallest pipe size or install intermediate supports for smaller diameter pipe as specified above for individual pipe hangers.
Individual pipe hangers to be Anvil International Clevis Hanger Fig. 260, Elcen, or approved equal.
Rod sizes to conform to the following: 3/8" rods for 3/4"-2" pipe; 1/2" rods for 2-1/2"-3" pipe; 5/8" for 4"-5" pipe and 3/4" for 6" pipe.
Hangers shall be sized to allow insulation to pass through unobstructed, provide saddle support for insulation at all hanger.
Hanger spacing for steel piping unless otherwise noted is to be as follows: 1-1/4" or smaller to be 8' on center; 1-1/2"-2" to be 10' on center; 2-1/2" and larger to be 12' on center and at each change of direction. Hanger spacing for copper pipe to be as follows: 1" or smaller 6' on center; 1-1/4" or larger 8' on center.
Piping shall be also supported at each change in direction, at valves, and at equipment.

SECTION 23 05 93.00 – TESTING, ADJUSTING AND BALANCING FOR HVAC

Submittal Requirements
Shop Drawings: Certified Reports: Submit testing, adjusting, and balancing reports bearing the seal and signature of the Test and Balance Engineer. The reports shall be certified proof that the systems have been tested, adjusted, and balanced in accordance with the referenced standards; are an accurate representation of how the systems have been installed; are a true representation of how the systems are operating at the completion of the testing, adjusting, and balancing procedures; and are an accurate record of all final quantities measured, to establish normal operating values of the systems. Final Report: Upon verification and approval prepare final reports, type written, and organized and formatted as specified below. Submit 2 complete sets of final report to the owner.

General
Test, adjust, and balance the following mechanical systems:
Supply air systems, all pressure ranges
Return air systems.
Exhaust air systems.
Verify temperature control system operation.
Test systems for proper sound and vibration levels.
Quality Assurance
Codes and Standards:
AABC: "National Standards for Total System Balance".
ASHRAE: ASHRAE Handbook, 2011 Applications, Chapter 38, Testing, Adjusting, and Balancing.
Qualifications
The contractor shall procure the services of an independent Balance and Testing Agency, approved by the Engineer, and a member of Associated Air Balance Council (AABC) or NEBB, which specializes in the balancing and testing of heating, ventilating and air conditioning systems, to balance, adjust and test all air and water systems and equipment as herein specified. All work by this agency shall be done under direct supervision of a qualified heating and ventilating Engineer employed by this agency. All instruments used by this agency shall be accurately calibrated and maintained in good working order.
Sequencing and Scheduling
Test, adjust and balance air conditioning systems during summer season and heating systems during winter season, including at least a period of operation at outside conditions within 5 deg F wet bulb temperature of maximum summer design condition, and within 10 deg F dry bulb temperature of minimum winter design condition. Take final temperature readings during seasonal operations.
Check all filters for cleanliness, provide new as required.
Check dampers (volume and fire) for correct and locked position, and temperature control for completeness of installation before starting fans. Place outlet dampers in full open position. Lubricate all motors and bearings.
Check fan belt tension. Check fan rotation.
Air balance and testing shall not begin until the system has been completed and is in full working order. The Contractor shall put all heating, ventilating and air conditioning systems and equipment into full operation and shall continue the operation of same during each working day of testing and balancing. The contractor shall submit within 30 days after receipt of contract, 8 copies of submittal data for the testing and balancing of the air conditioning, heating, and ventilating systems. The Air Balance and Testing Agency shall provide proof of having successfully completed at least five projects of similar size and scope.
The air balancing contractor shall include the additional cost to change every fan factory installed sheave, pulley and/or belt of in order to obtain the design air flows.
Performing Testing, Adjusting and Balancing
Perform testing and balancing procedures on each system identified, in accordance with the detailed procedures outlined in the referenced standards.
Cut insulation, ductwork, and piping for installation of test probes to the minimum extent necessary to allow adequate performance of procedures.
Patch insulation, ductwork, and housings, using materials identical to those removed.
Seal ducts and piping, and test for and repair leaks.
Seal insulation to re-establish integrity of the vapor barrier.
Mark equipment settings, including damper control positions; valve indicators, fan speed control levers, and similar controls and devices, to show final settings. Mark with paint or other suitable, permanent identification materials.
Retest, adjust, and balance systems subsequent to significant system modifications, and resubmit test results.

SECTION 23 07 13.00 – DUCT INSULATION

Submittal Requirements
Product Data: For each product indicated.
Shop Drawings: Include plans, elevations, sections, details and attachments to other work.

All liners, insulation and adhesives shall have a flame spread index not more than 25 and a smoke developed index of not more than 50. Insulation shall have a minimum installed thermal resistance value of R6 or code minimum, whichever higher.
Rigid Fiberglass Ductwork Insulation: Glass fibers bonded with a thermosetting resin. Comply with ASTM C 612, Type IB, without facing and with vapor barrier all-service jacket manufactured from kraft paper, reinforcing scrim, aluminum foil, and vinyl film.
Flexible Fiberglass Ductwork Insulation: Glass fibers bonded with a thermosetting resin. Comply with ASTM C 553, Type II, without facing and with vapor barrier all-service jacket manufactured from kraft paper, reinforcing scrim, aluminum foil, and vinyl film.
Vapor Barrier Material for Ductwork: Paper-backed aluminum-foil, except as otherwise indicated; strength and permeability rating equivalent to factory-applied vapor barriers on adjoining ductwork insulation, where available; with following additional construction characteristics:
High Puncture Resistance: Low vapor transmission (for ducts in exposed areas: Mech. Rooms, etc.)
Moderate Puncture Resistance: Medium vapor transmission (for ducts in concealed areas).
All ductwork shall be insulated except:
Double wall ductwork
Fabric ductwork
Metal ducts with duct liner of sufficient thickness to comply with energy code.
Factory insulated flexible ductwork
Factory insulated plenums and casings
Flexible connectors
Vibration control devices
Factory insulated access panels and doors
Supply ductwork exposed in conditioned spaces excluding mechanical rooms, server rooms and electric equipment rooms
Toilet exhaust, general exhaust and return ductwork in an insulated joist or attic space.

SECTION 23 09 93.00 – SEQUENCE OF OPERATIONS FOR HVAC CONTROLS

Submittal Requirements
Product Data: Provide written sequences of operation for each controlled system and piece of equipment.

Packaged Rooftop Unit
1. Startup
The unit shall operate on a 7 day/night programmable thermostat.
During startup, the fan shall run with the dampers in the full recirculation position. Provide occupied changeover sequence with optimum start function. When the return air temperature reaches occupied setpoint (adjustable), the minimum outside air damper shall open to the controlled minimum outdoor air position.
2. Supply Fan Control
The supply fan shall be two staged and modulate up and down based on a call for heating or cooling.
3. Space Temperature Control
Provide 7-day programmable thermostat with digital display of space temperature and setpoint (+/- deg. F. adjustable), with override feature and remote space temperature sensor.
4. Minimum Outside Air Control
During occupied mode, the minimum outside air damper shall be open to the scheduled minimum outdoor air flow and modulate proportionally with the supply fan speed to maintain the scheduled minimum outside airflow. When the supply fan speed is set to high, outside air damper shall be partially closed allowing minimum outside air flow as scheduled. As supply fan speed is set to low, damper shall fully open allowing minimum outside air flow as scheduled. Provide motor operated dampers.
Provide carbon dioxide sensors in the space to measure carbon dioxide levels. Outside air damper shall modulate to maintain maximum carbon dioxide level setpoint at all times during occupied mode. CO2 levels shall be held below 1000 ppm (adjustable). When CO2 levels are below setpoint, outside air damper shall be at a minimum position, which equates to the sum of the "OA SQFT" multiplied by the room areas of each room in the "HVAC Ventilation Schedule" during occupied mode.
5. Economizer Control
Provide dual enthalpy economizer control. Economizer control shall be enabled whenever the outside air enthalpy is lower than the return air enthalpy. Enthalpy shall be calculated from sensors which are tied to the same controller for accuracy. During economizer mode, the outside air damper shall modulate to 100% open. The economizer damper shall modulate open on a call for cooling and modulate closed on a call for heating. The return damper shall modulate inversely with the economizer damper. Economizer shall have powered relief.
6. Cooling Control
Cooling shall be controlled to maintain space temperature setpoint. On a call for cooling, the heating shall be off and supply fan speed shall be low. On a further call for cooling, the economizer shall be enabled. On a further call for cooling, disable the economizer and energize first stage cooling on. On a further call for cooling, the supply fan speed shall be high and energized second stage of cooling.
7. Heating Control
Heating shall be controlled to maintain space temperature setpoint. On a call for heating, the mechanical cooling shall be off. On a further call for heating, the economizer mode shall be disabled. On a further call for heating, the supply fan shall be set to low speed and the gas heating shall be disabled. On a further call for heating, the supply fan shall be set to high speed and the gas heating shall be staged on.
8. Dehumidification
Provide a hot gas reheat coil for dehumidification. Provide space humidity sensor. When the space humidity rises above 60% (adjustable), provide full cooling and modulate the hot gas reheat coil to maintain space temperature setpoint. When the space humidity reaches setpoint, resume with normal heating & cooling operation.
9. Smoke Detector
When the smoke detector is alarmed, the system shall be alarmed and the air handler shall fail safe with manual reset.
10. Unoccupied Mode
During the unoccupied mode of operation, the RTU shall go into night setback mode.
Night Setback/Shutdown
At night setback/shutdown the RTU shall go to fail safe position. Fail safe position is defined by the following: The supply fan is off, the outdoor air intake damper is closed, the heating is off and the mechanical cooling is off. The supply fan shall cycle in conjunction with either the heating or cooling system to maintain a minimum/maximum space temperature depending on the season.

Exhaust Fans (Timeclock)
Exhaust fans shall be tied to timeclock, which shall be furnished, installed and wired by electrical contractor. When activated, exhaust fan motor damper shall open and fan shall start.
(Indicated by EC on HECS schedule)

Heated Air Curtain
Provide a self-contained integral thermostat with adjustable setpoint. On a call for heating, fan shall start and coil shall activate to maintain room temperature setpoint.
Provide relays and controls to automatically shut off heat when outdoor air temperatures are greater than 45F.

Controls
Electrical contractor will provide power wiring. HVAC contractor shall provide all the low voltage wiring of HVAC units and controls, thermostats and controllers.
Thermostat shall be by the manufacturer of the HVAC unit (heat/cool/auto/off) with night setback. Provide plastic protective cover for all thermostats. Replace controls on existing unit, adjust and calibrate controls.

KLH ENGINEERS
MECHANICAL/ELECTRICAL ENGINEERS
WWW.KLHENGRS.COM
KOHRS LONNEMANN HEIL ENGINEERS, INC.
444 SOUTH FRONT STREET
COLUMBUS, OHIO 43215
800-354-9783 614-228-2180
614-228-2183 FAX
FORT THOMAS, KENTUCKY
LEXINGTON, KENTUCKY
LOUISVILLE, KENTUCKY
NEW YORK, NEW YORK

PERMIT SET - FOR CONSTRUCTION

© 2022 STARBUCKS COFFEE COMPANY

STARBUCKS COFFEE COMPANY
2401 UTAH AVENUE SOUTH
SEATTLE, WASHINGTON 98134
(206) 318-1575

THESE DRAWINGS AND PROJECT MANUAL ARE CONFIDENTIAL AND SHALL REMAIN THE SOLE PROPERTY OF STARBUCKS CORPORATION, WHICH IS THE OWNER OF THE COPYRIGHT IN THIS WORK. THEY SHALL NOT BE REPRODUCED (IN WHOLE OR IN PART), SHARED WITH THIRD PARTIES OR USED IN ANY MANNER ON OTHER PROJECTS OR EXTENSIONS TO THIS PROJECT WITHOUT THE PRIOR WRITTEN CONSENT OF STARBUCKS CORPORATION. THESE DRAWINGS AND SPECIFICATIONS ARE INTENDED TO EXPRESS DESIGN INTENT FOR A PROTOTYPICAL STARBUCKS STORE (WHICH IS SUBJECT TO CHANGE AT ANYTIME) AND DO NOT REFLECT ACTUAL SITE CONDITIONS. NEITHER PARTY SHALL HAVE ANY OBLIGATION NOR LIABILITY TO THE OTHER (EXCEPT STATED ABOVE) UNTIL A WRITTEN AGREEMENT IS FULLY EXECUTED BY BOTH PARTIES.

STARBUCKS TEMPLATE VERSION i2022.10.23

Gensler
MAIN OFFICE
M. ARTHUR GENSLER JR. & ASSOCIATES
FL QUALIFIER'S LIC. NO. AR96486
45 FREMONT ST, SUITE 1500
SAN FRANCISCO, CA 94105 USA
Tel (415) 433.3700
Fax (415) 836.4599
SATELLITE OFFICE
10 NORTH PARK PLACE
SUITE 400
MORRISTOWN, NJ 07960 USA
Tel (973) 290.8500

PROJECT NAME:
ST LUCIE WEST & SW CASHEMERE BLVD

PROJECT ADDRESS:
920 SW SAINT LUCIE BLVD,
PORT ST.LUCIE, FL 34986

STORE #:	81616
PROJECT #:	101357-001
ISSUE DATE:	06-27-2025
STORE DESIGNER:	ASHLEY SUEIRAS
DESIGN MANAGER:	GENSLER
ENGINEER OF RECORD:	KLH ENGINEERS

Revision Schedule

Rev	Date	By	Description

SHEET TITLE:
MECHANICAL OUTLINE SPECIFICATIONS
SCALE: AS SHOWN

SHEET NUMBER:
M003

9/4/2025 2:30:07 PM C:\Users\dburdine\Documents\Revit\27472.00-23-MEP-SBX- Port St. St. Lucie, FL_dburdine.rvt

Low Voltage Thermostats
Low voltage thermostats shall be furnished, installed and wired by the HVAC contractor. The electrical contractor shall provide 4" square x 1- 1/2" deep wall outlet boxes (with single-gang rings) for all thermostats/sensors. The electrical contractor shall provide one 3/4" empty conduit from each thermostat/sensor location, turned out above accessible ceilings (in joist space or against overhead slab/deck). The HVAC/Temperature Control Contractor shall provide all other necessary conduit, raceway and wiring related work. Conduit shall be identified in ceiling cavity and shall be provided with sweep bends, bushings and dragline.
The HVAC/Temperature Control Contractor shall coordinate with the General Contractor to ensure thermal envelope is maintained at these locations.

Temperature Sensors tied to EMS
Sensors shall be furnished, installed and wired by the Temperature Control Contractor. The electrical contractor shall provide 4" square x 1- 1/2" deep wall outlet boxes at 54" above finished floor (with single-gang rings) for all thermostats/sensors. The electrical contractor shall provide one 3/4" empty conduit from each thermostat/sensor location, turned out above accessible ceilings (in joist space or against overhead slab/deck). The Temperature Control Contractor shall provide all other necessary conduit, raceway and wiring related work. Conduit shall be identified in ceiling cavity and shall be provided with sweep bends, bushings and dragline.
The HVAC/Temperature Control Contractor shall coordinate with the General Contractor to ensure thermal envelope is maintained at these locations.

120VAC BAS/Temperature Control Circuits
The Electrical Contractor shall provide a 120V control circuit (with local toggle disconnect switch and pilot light) installed to a junction box nearby units for Temperature Control Subcontractor use, only where specifically indicated on electrical drawings. These are shown on electrical drawings as junction boxes marked as "BAS". All other required 120VAC raceway and wiring related work shall be provided by the HVAC/Temperature Control Contractor.
The HVAC/Temperature Control Contractor shall coordinate with the General Contractor to ensure thermal envelope is maintained at these locations.

Carbon Dioxide Sensors
Carbon dioxide sensors shall be non-dispersive infrared (NIDR) type with a measurement range of 0-2000 ppm, repeatability of +/- 20 ppm and a measurement accuracy of +/- 75 ppm.
The recommended calibration interval shall be a minimum of 5 years.
Space mounted applications shall utilize diffusion through an attractive, satin finish, high impact housing.

General Control Wiring Requirements and Installation Methods
Except where specifically indicated otherwise above, the HVAC/Temperature Control Contractor shall provide all electrical work as required for all temperature control related wiring (i.e. conduit, raceway, outlet boxes, junction boxes, wiring, etc.) in accordance with Electrical Specifications requirements. All conduit shall be 3/4" minimum.
Coordinate all thermostat/sensor locations in field (case by case) with Architect, Owner and Electrical Contractor to ensure that they are placed in locations that will not interfere with furniture, equipment, artwork, wall-hung specialties, room finishes, etc. All thermostat/sensor wall locations indicated on HVAC drawings are schematic only and must be verified case-by-case prior to rough-in.
All electrical work as described in this specification shall be per the latest edition of the National Electrical Code (NEC) and per applicable state and local codes.
Where "free-air" installation methods (either exposed above the ceilings, in bridle rings or in cable trays) are permitted under Electrical Specifications above ceilings, provide plenum-rated cables wherever plenum ceilings (if any) exist and install as defined under Electrical Specifications. Install low voltage circuits, located in concrete slabs and masonry walls, in inaccessible locations, or exposed in occupied areas, in electrical conduit regardless of what wiring methods are permitted under Electrical Specifications.
Where cable trays or bridle rings are provided by the electrical contractor for low voltage cables, these raceways may be utilized for control wiring by this contractor (provide special color coded jackets, label cable jackets per Electrical Specifications and group control wiring cables together). Provide conduit drops from cable tray/bridle ring paths to wall outlet boxes and equipment unless directed otherwise under Electrical Specifications.
Regardless of permitted methods in Electrical Specifications, all cables/wiring installed concealed by gypsum board, masonry or other inaccessible materials in walls or above ceilings shall be installed in conduit, 3/4" minimum.
All conduit, bridle rings, raceway, outlet boxes, etc. necessary for complete operational installation of control wiring shall be provided (furnished and installed) by the temperature control contractor in strict compliance with Electrical Specifications documents. Coordinate all work with all other applicable trades including the electrical contractor.
Provide all required conduit work to and between equipment in a manner compliant with that described above (i.e. between VAV boxes, to boilers, starters, condensing units, etc. as applicable).
Install control wiring without splices between terminal points, color-coded. Install in neat workmanlike manner, securely fastened. Install in accordance with National Electrical Code and per Electrical Specifications.
Install circuits over 25 volt with color-coded No. 12 wire in electrical metallic tubing, per Electrical Specifications.
Install circuits under 25 volt with color-coded No. 18 wire with 0.031" high temperature (105 degs. F) plastic insulation on each conductor and plastic sheath over all.
Install electronic circuits with color-coded No. 22 wire with 0.023" polyethylene insulation on each conductor with plastic-jacketed copper shield over all.

Smoke Detector
All duct smoke detectors will be furnished by electrical contractor, installed by the HVAC contractor, and wired by the electrical contractor per local codes. HVAC contractor will interlock fan with smoke detector.

Motor Operated Dampers
All fresh air intakes and exhaust louvers shall have motor operated dampers. Dampers shall be low leak with blade and edge seals. All motor operated dampers shall be provided and wired by the mechanical contractor unless otherwise noted. Provide all necessary transformers, contactors, controls and wiring for interlocking equipment to motor operated dampers.

SECTION 23 31 13.00 – METAL DUCTS

Submittal Requirements
Product Data: For liners, adhesives, sealants and gaskets.
Shop Drawings: Sheet metal thickness, reinforcing details, duct layouts indicating sizes, configuration, liner material, elevation and static pressure class.

Ductwork Materials
Exposed Ductwork Materials: Where ductwork is indicated to be exposed to view in occupied spaces, provide materials which are free from visual imperfections including pitting, seam marks, roller marks, stains and discolorations, and other imperfections, including those which would impair painting. Mechanical contractor shall confirm ductwork paint scope and color with architect.
Exposed ductwork which is to be painted shall have paint grip applied and be oil free.
Sheet Metal: Except as otherwise indicated, fabricate ductwork from galvanized sheet steel, lock forming quality; with G 90 zinc coating and mill phosphatized for exposed locations. Minimum gauge shall be 24.
Miscellaneous Ductwork Materials
Volume Dampers: Provide volume dampers in all branch ducts or as required for balancing to required air flows.
Fittings: Provide radius type fittings fabricated of multiple sections with maximum 15 deg. change of direction per section. Unless specifically detailed otherwise, use 45 deg. laterals and 45 deg. elbows for branch takeoff connections. Where 90 deg. branches are indicated, provide conical type tees.
Duct Sealant: Non-hardening, non-migrating mastic or liquid elastic sealant, type applicable for fabrication/installation detail, as compounded and recommended by manufacturer specifically for sealing joints and seams in ductwork.
Duct Cement: Non-hardening migrating mastic or liquid neoprene based cement, type applicable for fabrication/installation detail, as compounded and recommended by manufacturer specifically for cementing fitting components, or longitudinal seams in ductwork.
Ductwork Support Materials: Except as otherwise indicated, provide hot-dipped galvanized steel fasteners, anchors, rods, straps, trim and angles for support of ductwork.
Flexible Ducts
Either spiral-wound spring steel with flameproof vinyl sheathing, or corrugated aluminum. Unless specifically mentioned, the maximum length of flex duct on the supply equals 5 feet. Flex is not allowed for return, relief or exhaust applications. The flexible ducts indicated for use in the H.V.A.C. system shall conform to the requirements of UL 181 for Class 0 or Class 1 flexible air ducts and shall be so identified.
Where installed in unconditioned spaces other than return air plenums, provide 1" thick 1-1/2 lb. continuous flexible fiberglass sheath with vinyl vapor barrier jacket.
Installation is not permitted above drywall ceilings and inaccessible ceilings.
Fabrication
Shop fabricate ductwork in 4, 8, 10 or 12-ft lengths, unless otherwise indicated or required to complete runs. All ductwork shall be Pittsburgh Construction with a minimum of thickness of 24 gauge. In addition, ductwork used in systems over 3" W.G. shall have cold sealant applied.
Shop fabricate ductwork of gauges and reinforcement complying with SMACNA "HVAC Duct Construction Standards".
Lined Duct
Fabricate ductwork with duct liner in each section of duct where indicated. Laminate liner to internal surfaces of duct in accordance with instructions by manufacturers of lining and adhesive, and fasten with mechanical fasteners.
Duct liner to be 3-lb density for acoustic requirements 1" thick or as noted. Size of ductwork shown on the drawings is free net area, outside dimension of ducts will need to be increased if lined duct is used.
Size of ductwork shown on the drawings is free net area, outside dimension of ducts will need to be increased if lined duct is used.
Duct Liner: Fibrous glass of thickness indicated. 3-lb density. All liners, insulation and adhesives shall have a flame spread index not more than 25 and a smoke developed index of not more than 50.
Duct Liner Adhesive: As recommended by insulation manufacturer and complying with NFPA 90A or NFPA 90B.
Duct Liner Fasteners: Comply with SMACNA HVAC Duct Construction Standards.
Installation of Metal Ductwork
General: Assemble and install ductwork in accordance with recognized industry practices which will achieve air-tight (5% leakage for systems rated 3" and under; 1% for systems rated over 3") and noiseless (no objectionable noise) systems, capable of performing each indicated service. Install each run with minimum number of joints. Align ductwork accurately at connections, within 1/8" misalignment tolerance and with internal surfaces smooth. Support ducts rigidly with suitable ties, braces, hangers and anchors of type which will hold ducts true-to-shape and to prevent buckling. Support vertical ducts at every floor.
Sealing: Seal all longitudinal seams, S's and drives and all joints with mastic or cement. Install according to SMACNA standards.
Balancing Dampers: The sheet metal contractor shall be fully responsible for installing balancing dampers in the ductwork, (whether shown on the drawing or not) in order to arrive at the intended air flow. The balancing sub-contractor shall provide direction and assistance in determining locations where dampers are required. Additional dampers, if required shall be installed at no additional cost to the owner.
Wall Penetrations: Seal and pack around all ducts and piping sleeves which pass through walls that extend to bottom side of structure and rated walls.
Field Fabrication: Complete fabrication of work at project as necessary to match shop-fabricated work and accommodate installation requirements.
Routing: Locate ductwork runs, except as otherwise indicated, vertically and horizontally and avoid diagonal runs wherever possible. Run ductwork in shortest route which does not obstruct useable space or block access for servicing building and its equipment. Hold ducts close to walls, overhead construction, columns, and other structural and permanent enclosure elements of building. Limit clearance to 1/2" where furring is shown for enclosure or concealment of ducts, but allow for insulation thickness, if any. Where possible, locate insulated ductwork for 1" clearance outside of insulation. Wherever possible in finished and occupied spaces, conceal ductwork from view, by locating in mechanical shafts, hollow wall construction or above suspended ceilings. Do not encase horizontal runs in solid partitions, except as specifically shown.
Coordinate layout with suspended ceiling and lighting layouts and similar finished work.
Electrical Equipment Spaces: Do not route ductwork through transformer vaults and their electrical equipment spaces and enclosures.
Penetrations: Where ducts pass through interior partitions and exterior walls, and are exposed to view, conceal space between construction opening and duct or duct insulation with sheet metal flanges of same gage as duct. Overlap opening on 4 sides by at least 1-1/2". Fasten to duct and substrate.
All dampers shall be low leakage with edge and blade seals. Damper manufacturers are subject to specification compliance. Provide products by one of the following:
Greenheck Fan Corporation
Nailor Industries
Pottorff
Ruskin Company
Young Regulator Company
Coordination: Coordinate duct installations with installation of accessories, dampers, coil frames, equipment, controls and other associated work of ductwork system.
Installation of Duct Liner
General: Install duct liner in accordance with SMACNA HVAC Duct Construction Standards. Size of ductwork shown on the drawings is free net area, outside dimension of ducts will need to be increased if lined duct is used.
Store internally lined ductwork up off of the floor. Protect internally lined ductwork from water and dust.
The following ductwork shall be lined in addition to that shown per plans:
Return from open ceiling plenum return to HVAC unit.
Supply and return ductwork 10 feet downstream of HVAC unit.
Transfer air ducts.
Butter the leading edge of all internal duct lining with the manufacturer's recommended adhesive.
Inspect and repair all damaged lining prior to installation of ductwork.
Installation of Flexible Ducts
Maximum Length: For any duct run using flexible ductwork, do not exceed 5' - 0" extended length.
Installation shall have smooth full radius turns down to diffuser.
Installation not permitted above inaccessible ceilings.

SECTION 23 34 33.00 – AIR CURTAINS

Submittal Requirements
Product Data: For each type of product indicated.

General
General: Provide air doors of size and capacity as noted on drawings. Air doors shall operate at a low sound level and meet OSHA standards.
Construction:
Wheels: Talc-filled polypropylene or aluminum.
Housing: Galvanized steel.
Motorboard: Galvanized steel.
Velocity Control: Provide adjustable louver damper controls for regulating rate of air flow. When louvers are completely closed air velocity shall reduce to sixty percent.
Directional Control: Provide adjustable vanes at outlet nozzle for directing air where needed and readily set to compensate for possible draft conditions through door openings. Vanes shall have a forty percent girth sweep front to back.
Motors: Provide totally enclosed shaded-pole, or permanent-split capacitor motors, Class "B" insulation, resiliently mounted, tap wound with built-in thermal overload protection, and with permanently lubricated type sleeve or ball bearings. Select motors with the voltage as scheduled.
Extended Motor Oilers: Provide plastic tubes for lubricating motor bearings which are installed beneath grille.
Motor Controls: Provide multi-speed motor control switch with OFF position, mounted behind access door.
Fans: Provide double width, double inlet centrifugal fans, which are balanced statically and dynamically, of indicated capacity. Select fans with single or double extended motor shaft, with fan housing and motor fastened as an integral assembly to a motorboard.
Electric Air Curtains
Heating Elements: Except as otherwise indicated, provide manufacturer's standard heating elements of types, sizes, capacities and ratings for duty indicated; consisting of resistance elements enclosed in steel sheath with extended fins, or with spirally finned sheath.
Electric Heating Capacity: Size elements for indicated fan speed, CFM, room heating load (BTUH), entering air temperature, and electric input (watts, voltage, phase).
Internal Electrical Wiring: Provide units with high temperature, electrical heat-resistant wiring in flexible metal conduit from terminal junction box to electrical devices. Provide fusing for motor and control circuit wiring. Provide all required control transformers.
Devices: Provide air doors with the following devices:
Thermally activated fan switch to keep fan motor operating until residual heat is dissipated.
Disconnect switch.
Automatic reset, high limit cut-out switch located in discharge air stream.
Manual "Summer-OFF-Winter" switch.
Unit-mounted line voltage thermostat
Automatic door switch: Plunger type installed in door area to activate air curtain when door opens and to deactivate air curtain when door closes.
Time delay relay
Control Power Transformer
Magnetic Contactor (Relay Kit)
Manufacturers: Subject to compliance with requirements, provide electric air doors of one of the following:
Berner
Mars Sales Company, Inc.
Powered Aire Inc.
Raywall
Schwank
Installation
Provide disconnect at side or unit for installation in recessed ceiling.
Provide trim piece to finish linear slot supply in ceiling for recessed units.
Coordinate with other electrical work, including wiring/cabling, as necessary to properly interface installation of heating terminal units with other work.
Clean dust and debris from each heating terminal as it is installed to ensure cleanliness.
Comb out damaged fins where bent or crushed before covering elements with enclosures.
Touch-up scratched or marred heating terminal enclosure surfaces to match original finishes.
Field Quality Control
Upon completion of installation of electric heating terminals, and after building circuitry has been energized, test heating terminals to demonstrate capability and compliance with requirements.
Replace electric heating terminals and accessories which are damaged and remove damaged items from construction site.

23 37 13.00 – DIFFUSERS, REGISTERS AND LOUVERS

Submittal Requirements
Product Data: For each type of product indicated.

DIFFUSERS, GRILLES AND REGISTERS
Manufacturer: Subject to compliance with requirements, provide diffusers of one of the following:
Anemostat Products Div., Dynamics Corp. of America.
Metal-Aire
Titus Products Div., Philips Industries, Inc.
Tuttle and Bailey.
Price
Louvers and dampers
Provide louvers and dampers of size as noted.
Manufacturer: Subject to compliance with requirements, provide diffusers of one of the following:
Aerolite
Prefco
Pottorff
Greenheck
Ruskin

KLH ENGINEERS
MECHANICAL/ELECTRICAL ENGINEERS
WWW.KLHENGRS.COM
KOHRS LONNEMANN HEIL ENGINEERS, INC.
444 SOUTH FRONT STREET
COLUMBUS, OHIO 43215
800-354-9783 614-228-2180
614-228-2183 FAX
FORT THOMAS, KENTUCKY
LEXINGTON, KENTUCKY
LOUISVILLE, KENTUCKY
NEW YORK, NEW YORK

PERMIT SET - FOR CONSTRUCTION

© 2022 STARBUCKS COFFEE COMPANY

STARBUCKS COFFEE COMPANY
2401 UTAH AVENUE SOUTH
SEATTLE, WASHINGTON 98134
(206) 318-1575

THESE DRAWINGS AND PROJECT MANUAL ARE CONFIDENTIAL AND SHALL REMAIN THE SOLE PROPERTY OF STARBUCKS CORPORATION, WHICH IS THE OWNER OF THE COPYRIGHT IN THIS WORK. THEY SHALL NOT BE REPRODUCED (IN WHOLE OR IN PART), SHARED WITH THIRD PARTIES OR USED IN ANY MANNER ON OTHER PROJECTS OR EXTENSIONS TO THIS PROJECT WITHOUT THE PRIOR WRITTEN CONSENT OF STARBUCKS CORPORATION. THESE DRAWINGS AND SPECIFICATIONS ARE INTENDED TO EXPRESS DESIGN INTENT FOR A PROTOTYPICAL STARBUCKS STORE (WHICH IS SUBJECT TO CHANGE AT ANYTIME) AND DO NOT REFLECT ACTUAL SITE CONDITIONS. NEITHER PARTY SHALL HAVE ANY OBLIGATION NOR LIABILITY TO THE OTHER (EXCEPT STATED ABOVE) UNTIL A WRITTEN AGREEMENT IS FULLY EXECUTED BY BOTH PARTIES.

STARBUCKS TEMPLATE VERSION i2022.10.23

Gensler
MAIN OFFICE
M. ARTHUR GENSLER JR. & ASSOCIATES
FL QUALIFIER'S LIC. NO. AR96486
45 FREMONT ST, SUITE 1500
SAN FRANCISCO, CA 94105 USA
Tel (415) 433.3700
Fax (415) 836.4599
SATELLITE OFFICE
10 NORTH PARK PLACE
SUITE 400
MORRISTOWN, NJ 07960 USA
Tel (973) 290.8500

PROJECT NAME:
ST LUCIE WEST & SW CASHEMERE BLVD

PROJECT ADDRESS:
920 SW SAINT LUCIE BLVD,
PORT ST.LUCIE, FL 34986

STORE #:	81616
PROJECT #:	101357-001
ISSUE DATE:	06-27-2025
STORE DESIGNER:	ASHLEY SUEIRAS
DESIGN MANAGER:	GENSLER
ENGINEER OF RECORD:	KLH ENGINEERS

Revision Schedule

Rev	Date	By	Description

SHEET TITLE:
MECHANICAL OUTLINE SPECIFICATIONS
SCALE: AS SHOWN

SHEET NUMBER:
M004

COM*check* Software Version COMcheckWeb

Mechanical Compliance Certificate

Project Information

Energy Code: 90.1 (2019) Standard
Project Title: 27472.00 - Starbucks - Tenant Improvement - Port Street, St. Lucie, FL
Location: Fort Pierce, Florida
Climate Zone: 2a
Project Type: New Construction

Construction Site: Owner/Agent: Designer/Contractor:

Mechanical Systems List

Quantity System Type & Description

1 RTU-1 (Single Zone):
Heating: 1 each - Central Furnace, Electric, Capacity = 25 kBtu/h
No minimum efficiency requirement applies
Cooling: 1 each - Single Package DX Unit, Capacity = 120 kBtu/h, Air-Cooled Condenser, Air Economizer
Proposed Efficiency = 11.20 EER, Required Efficiency = 11.20 EER
Proposed Part Load Efficiency = 0.00 IEER, Required Part Load Efficiency = 14.80 IEER
Fan System: FAN SYSTEM 1 -- Compliance (Motor nameplate HP and fan efficiency method) : Passes

Fans:
FAN 1 Supply, Constant Volume, 4000 CFM, 1.0 motor nameplate hp, 1.00 fan energy index

1 RTU-2 (Single Zone):
Heating: 1 each - Central Furnace, Electric, Capacity = 50 kBtu/h
No minimum efficiency requirement applies
Cooling: 1 each - Single Package DX Unit, Capacity = 120 kBtu/h, Air-Cooled Condenser, Air Economizer
Proposed Efficiency = 11.20 EER, Required Efficiency = 11.20 EER
Proposed Part Load Efficiency = 0.00 IEER, Required Part Load Efficiency = 14.80 IEER
Fan System: FAN SYSTEM 2 -- Compliance (Motor nameplate HP and fan efficiency method) : Passes

Fans:
FAN 2 Supply, Constant Volume, 3750 CFM, 1.0 motor nameplate hp, 1.00 fan energy index

1 Water Heater:
Electric Storage Water Heater, Capacity: 50 gallons w/ Circulation Pump
Proposed Efficiency: 0.84 SL, %/h (if > 12 kW), Required Efficiency: 0.84 SL, %/h (if > 12 kW)

Mechanical Compliance Statement

Compliance Statement: The proposed mechanical design represented in this document is consistent with the building plans, specifications, and other calculations submitted with this permit application. The proposed mechanical systems have been designed to meet the 90.1 (2019) Standard requirements in COM*check* Version COMcheckWeb and to comply with any applicable mandatory requirements listed in the Inspection Checklist.

Name - Title Signature Date

COM*check* Software Version COMcheckWeb

Inspection Checklist

Energy Code: 90.1 (2019) Standard

Requirements: 100.0% were addressed directly in the COM*check* software

Text in the "Comments/Assumptions" column is provided by the user in the COMcheck Requirements screen. For each requirement, the user certifies that a code requirement will be met and how that is documented, or that an exception is being claimed. Where compliance is itemized in a separate table, a reference to that table is provided.

Section # & Req.ID	Plan Review	Complies?	Comments/Assumptions
4.2.2, 6.4.4.2.1, 6.7.2 [PR2][1]	Plans, specifications, and/or calculations provide all information with which compliance can be determined for the mechanical systems and equipment and document where exceptions to the standard are claimed. Load calculations per acceptable engineering standards and handbooks.	☐Complies ☐Does Not ☐Not Observable ☐Not Applicable	Requirement will be met.
4.2.2, 7.7.1, 10.4.2 [PR3][1]	Plans, specifications, and/or calculations provide all information with which compliance can be determined for the service water heating systems and equipment and document where exceptions to the standard are claimed. Hot water system sized per manufacturer's sizing guide.	☐Complies ☐Does Not ☐Not Observable ☐Not Applicable	Requirement will be met.
4.2.2, 8.4.1.1, 8.4.1.2, 8.7 [PR6][2]	Plans, specifications, and/or calculations provide all information with which compliance can be determined for the electrical systems and equipment and document where exceptions are claimed. Feeder connectors sized in accordance with approved plans and branch circuits sized for maximum drop of 3%.	☐Complies ☐Does Not ☐Not Observable ☐Not Applicable	Requirement will be met.
4.2.5.2 [PR5][1]	Commissioning shall be performed as stated in Sections 5.9.2, 6.9.2, 7.9.2, 8.9.2, 9.9.2, 10.9.2, 11.2(d), and G1.2.1(c). Commissioning must utilize ASHRAE/IES Standard 202 or other generally accepted engineering standards acceptable to the building official. FPT and verification requirements for commissioning are as stated in Section 4.2.5.1. Commissioning shall document compliance of the building systems, controls, and building envelope with required provisions of this standard. Commissioning requirements shall be incorporated into the construction documents.	☐Complies ☐Does Not ☐Not Observable ☐Not Applicable	**Exception:** Buildings, additions, or alterations with less than 10,000 ft2 of conditioned space and combined heating, cooling, and service water heating equipment totaling less than 960,000 Btu/h in capacity.

Additional Comments/Assumptions:

1 High Impact (Tier 1) 2 Medium Impact (Tier 2) 3 Low Impact (Tier 3)

Section # & Req.ID	Footing / Foundation Inspection	Complies?	Comments/Assumptions
6.4.3.7 [FO9][3]	Freeze protection and snow/ice melting system sensors for future connection to controls.	☐Complies ☐Does Not ☐Not Observable ☐Not Applicable	Requirement will be met.

Additional Comments/Assumptions:

1 High Impact (Tier 1) 2 Medium Impact (Tier 2) 3 Low Impact (Tier 3)

Section # & Req.ID	Plumbing Rough-In Inspection	Complies?	Comments/Assumptions
7.4.4.1 [PL2][3]	Temperature controls installed on service water heating systems (<=120ºF to maximum temperature for intended use).	☐Complies ☐Does Not ☐Not Observable ☐Not Applicable	Requirement will be met.
7.4.4.2 [PL3][1]	Automatic time switches installed to automatically switch off the recirculating hot-water system or heat trace.	☐Complies ☐Does Not ☐Not Observable ☐Not Applicable	Requirement will be met.

Additional Comments/Assumptions:

1 High Impact (Tier 1) 2 Medium Impact (Tier 2) 3 Low Impact (Tier 3)

Section # & Req.ID	Mechanical Rough-In Inspection	Plans Verified Value	Field Verified Value	Complies?	Comments/Assumptions
6.4.1.4, 6.4.1.5 [ME1][2]	HVAC equipment efficiency verified. Non-NAECA HVAC equipment labeled as meeting 90.1.	Efficiency:____	Efficiency:____	☐Complies ☐Does Not ☐Not Observable ☐Not Applicable	*See the Mechanical Systems list for values.*
6.4.3.4.1 [ME3][3]	Stair and elevator shaft vents have motorized dampers that automatically close.			☐Complies ☐Does Not ☐Not Observable ☐Not Applicable	**Exception:** Requirement does not apply.
6.4.3.4.5 [ME39][3]	Enclosed parking garage ventilation has automatic contaminant detection and capacity to stage or modulate fans to 50% or less of design capacity.			☐Complies ☐Does Not ☐Not Observable ☐Not Applicable	**Exception:** Requirement does not apply.
6.4.3.4.4 [ME5][3]	Ventilation fans >0.75 hp have automatic controls to shut off fan when not required.			☐Complies ☐Does Not ☐Not Observable ☐Not Applicable	Requirement will be met.
6.4.3.8 [ME6][1]	Demand control ventilation provided for spaces >500 ft2 and >25 people/1000 ft2 occupant density and served by systems with air side economizer, auto modulating outside air damper control, or design airflow >3,000 cfm.			☐Complies ☐Does Not ☐Not Observable ☐Not Applicable	Requirement will be met.
6.5.3.2.1 [ME40][2]	DX cooling systems >= 75 kBtu/h (>= 65 kBtu/h effective 1/2016) and chilled-water and evaporative cooling fan motor hp >= ¼ designed to vary supply fan airflow as a function of load and comply with operational requirements.			☐Complies ☐Does Not ☐Not Observable ☐Not Applicable	Requirement will be met. *See the Mechanical Systems list for values.*
6.4.4.1.1 [ME7][3]	Insulation exposed to weather protected from damage. Insulation outside of the conditioned space and associated with cooling systems is vapor retardant.			☐Complies ☐Does Not ☐Not Observable ☐Not Applicable	Requirement will be met.
6.4.4.1.2 [ME8][2]	HVAC ducts and plenums insulated per Table 6.8.2. Where ducts or plenums are installed in or under a slab, verification may need to occur during Foundation Inspection.	R-____	R-____	☐Complies ☐Does Not ☐Not Observable ☐Not Applicable	Requirement will be met.
6.4.4.1.3 [ME9][2]	HVAC piping insulation thickness. Where piping is installed in or under a slab, verification may need to occur during Foundation Inspection.	____ in.	____ in.	☐Complies ☐Does Not ☐Not Observable ☐Not Applicable	**Exception:** Requirement does not apply.
6.4.4.1.4 [ME41][3]	Thermally ineffective panel surfaces of sensible heating panels have insulation >= R-3.5.			☐Complies ☐Does Not ☐Not Observable ☐Not Applicable	**Exception:** Requirement does not apply.
6.4.4.2.1 [ME10][2]	Ducts and plenums having pressure class ratings are Seal Class A construction.			☐Complies ☐Does Not ☐Not Observable ☐Not Applicable	Requirement will be met.

1 High Impact (Tier 1) 2 Medium Impact (Tier 2) 3 Low Impact (Tier 3)

Section # & Req.ID	Mechanical Rough-In Inspection	Plans Verified Value	Field Verified Value	Complies?	Comments/Assumptions
6.8.1-15, 6.8.1-16 [ME110][2]	Electrically operated DX-DOAS units meet requirements per Tables 6.8.1-15 or 6.8.1-16.			☐Complies ☐Does Not ☐Not Observable ☐Not Applicable	**Exception:** Requirement does not apply.
6.4.4.2.2 [ME11][3]	Ductwork operating >3 in. water column requires air leakage testing.			☐Complies ☐Does Not ☐Not Observable ☐Not Applicable	**Exception:** Requirement does not apply.
6.5.1.5 [ME16][1]	Economizer operation will not increase heating energy use during normal operation.			☐Complies ☐Does Not ☐Not Observable ☐Not Applicable	Requirement will be met.
6.5.2.3 [ME19][3]	Dehumidification controls provided to prevent reheating, recooling, mixing of hot and cold airstreams or concurrent heating and cooling of the same airstream.			☐Complies ☐Does Not ☐Not Observable ☐Not Applicable	Requirement will be met.
6.5.2.4.1 [ME68][3]	Humidifiers with airstream mounted preheating jackets have preheat auto-shutoff value set to activate when humidification is not required.			☐Complies ☐Does Not ☐Not Observable ☐Not Applicable	**Exception:** Requirement does not apply.
6.5.2.4.2 [ME69][3]	Humidification system dispersion tube hot surfaces in the airstreams of ducts or air-handling units insulated >= R-0.5.			☐Complies ☐Does Not ☐Not Observable ☐Not Applicable	**Exception:** Requirement does not apply.
6.5.2.5 [ME70][3]	Preheat coils controlled to stop heat output whenever mechanical cooling, including economizer operation, is active.			☐Complies ☐Does Not ☐Not Observable ☐Not Applicable	Requirement will be met.
6.5.2.6 [ME106][3]	Units that provide ventilation air to multiple zones and operate in conjunction with zone heating and cooling systems are prevented from using heating or heat recovery to warm supply air above 60°F when representative building loads or outdoor air temperature indicate that most zones demand cooling.			☐Complies ☐Does Not ☐Not Observable ☐Not Applicable	**Exception:** Requirement does not apply.
6.5.3.6 [ME72][2]	Motors for fans >= 1/12 hp and < 1 hp are electronically-commutated motors or have a minimum motor efficiency of 70%. These motors are also speed adjustable for either balancing or remote control.			☐Complies ☐Does Not ☐Not Observable ☐Not Applicable	Requirement will be met.

1 High Impact (Tier 1) 2 Medium Impact (Tier 2) 3 Low Impact (Tier 3)

KLH ENGINEERS
MECHANICAL/ELECTRICAL ENGINEERS
WWW.KLHENGRS.COM
KOHRS LONNEMANN HEIL ENGINEERS, INC.
444 SOUTH FRONT STREET
COLUMBUS, OHIO 43215
800-354-9783 614-228-2180
614-228-2183 FAX
FORT THOMAS, KENTUCKY
LEXINGTON, KENTUCKY
LOUISVILLE, KENTUCKY
NEW YORK, NEW YORK

PERMIT SET - FOR CONSTRUCTION

© 2022 STARBUCKS COFFEE COMPANY

STARBUCKS COFFEE COMPANY
2401 UTAH AVENUE SOUTH
SEATTLE, WASHINGTON 98134
(206) 318-1575

THESE DRAWINGS AND PROJECT MANUAL ARE CONFIDENTIAL AND SHALL REMAIN THE SOLE PROPERTY OF STARBUCKS CORPORATION, WHICH IS THE OWNER OF THE COPYRIGHT IN THIS WORK. THEY SHALL NOT BE REPRODUCED (IN WHOLE OR IN PART), SHARED WITH THIRD PARTIES OR USED IN ANY MANNER ON OTHER PROJECTS OR EXTENSIONS TO THIS PROJECT WITHOUT THE PRIOR WRITTEN CONSENT OF STARBUCKS CORPORATION. THESE DRAWINGS AND SPECIFICATIONS ARE INTENDED TO EXPRESS DESIGN INTENT FOR A PROTOTYPICAL STARBUCKS STORE (WHICH IS SUBJECT TO CHANGE AT ANYTIME) AND DO NOT REFLECT ACTUAL SITE CONDITIONS. NEITHER PARTY SHALL HAVE ANY OBLIGATION NOR LIABILITY TO THE OTHER (EXCEPT STATED ABOVE) UNTIL A WRITTEN AGREEMENT IS FULLY EXECUTED BY BOTH PARTIES.

STARBUCKS TEMPLATE VERSION |2022.10.23

Gensler
MAIN OFFICE
M. ARTHUR GENSLER JR. & ASSOCIATES
FL QUALIFIER'S LIC. NO. AR96486
45 FREMONT ST, SUITE 1500
SAN FRANCISCO, CA 94105 USA
Tel (415) 433.3700
Fax (415) 836.4599
SATELLITE OFFICE
10 NORTH PARK PLACE
SUITE 400
MORRISTOWN, NJ 07960 USA
Tel (973) 290.8500

PROJECT NAME:
ST LUCIE WEST & SW
CASHEMERE BLVD

PROJECT ADDRESS:
920 SW SAINT LUCIE BLVD,
PORT ST.LUCIE, FL 34986

STORE #: 81616
PROJECT #: 101357-001
ISSUE DATE: 06-27-2025
STORE DESIGNER: ASHLEY SUEIRAS
DESIGN MANAGER: GENSLER
ENGINEER OF RECORD: KLH ENGINEERS

Revision Schedule

Rev	Date	By	Description

SHEET TITLE:
MECHANICAL ENERGY CODE CALCULATIONS
SCALE: AS SHOWN

SHEET NUMBER:
M005

9/4/2025 2:30:10 PM C:\Users\dburdine\Documents\Revit\27472.00-23-MEP-SBX- Port St, St. Lucie, FL_dburdine.rvt

Section # & Req.ID	Mechanical Rough-In Inspection	Plans Verified Value	Field Verified Value	Complies?	Comments/Assumptions
6.5.3.4 [ME108][2]	Parallel-flow fan-powered VAV air terminals have automatic controls to a) turn off the terminal fan except when space heating is required or if required for ventilation; b) turn on the terminal fan as the first stage of heating before the heating coil is activated; and c) during heating for warmup or setback temperature control, either operate the terminal fan and heating coil without primary air or reverse the terminal damper logic and provide heating from the central air handler through primary air.			☐Complies ☐Does Not ☐Not Observable ☐Not Applicable	**Exception:** Requirement does not apply.
6.5.3.7 [ME109][2]	Required minimum outdoor air rate is the larger of minimum outdoor air rate or minimum exhaust air rate required by Standard 62.1, Standard 170, or applicable codes or accreditation standards. Outdoor air ventilation systems shall comply with one of the following: a) design minimum system outdoor air provided < 135% of the required minimum outdoor air rate, b) dampers, ductwork, and controls allow the system to supply <= the required minimum outdoor air rate with a single set-point adjustment., or c) system includes exhaust air energy recovery complying with Section 6.5.6.1.			☐Complies ☐Does Not ☐Not Observable ☐Not Applicable	Requirement will be met.
6.5.3.3 [ME42][3]	Multiple zone VAV systems with DDC of individual zone boxes have static pressure setpoint reset controls.			☐Complies ☐Does Not ☐Not Observable ☐Not Applicable	**Exception:** Requirement does not apply. *See the Mechanical Systems list for values.*
6.5.4.2 [ME25][3]	HVAC pumping systems with >= 3 control values designed for variable fluid flow (see section details).			☐Complies ☐Does Not ☐Not Observable ☐Not Applicable	**Exception:** Requirement does not apply.
6.5.7.1 [ME100][2]	Conditioned supply air to space with mechanical exhaust <= the greater of criteria of supply flow, required ventilation rate, exhaust flow minu the available transffer air (see section details).			☐Complies ☐Does Not ☐Not Observable ☐Not Applicable	**Exception:** Requirement does not apply.
6.5.7.2.1 [ME32][2]	Kitchen hoods >5,000 cfm have make up air >=50% of exhaust air volume.			☐Complies ☐Does Not ☐Not Observable ☐Not Applicable	**Exception:** Requirement does not apply.
6.5.7.2.4 [ME49][3]	Approved field test used to evaluate design air flow rates and demonstrate proper capture and containment of kitchen exhaust systems.			☐Complies ☐Does Not ☐Not Observable ☐Not Applicable	Requirement will be met.

1	High Impact (Tier 1)	2	Medium Impact (Tier 2)	3	Low Impact (Tier 3)

Section # & Req.ID	Mechanical Rough-In Inspection	Plans Verified Value	Field Verified Value	Complies?	Comments/Assumptions
6.5.8.1 [ME34][2]	Unenclosed spaces that are heated use only radiant heat.			☐Complies ☐Does Not ☐Not Observable ☐Not Applicable	Requirement will be met.
6.5.9 [ME35][1]	Hot gas bypass limited to: <=240 kBtu/h – 15% >240 kBtu/h – 10%			☐Complies ☐Does Not ☐Not Observable ☐Not Applicable	Requirement will be met.
7.4.2 [ME36][2]	Service water heating equipment meets efficiency requirements.			☐Complies ☐Does Not ☐Not Observable ☐Not Applicable	
6.4.3.9 [ME63][2]	Heating for vestibules and air curtains with integral heating include automatic controls that shut off the heating system when outdoor air temperatures > 45F. Vestibule heating and cooling systems controlled by a thermostat in the vestibule with heating setpoint <= 60F and cooling setpoint >= 80F.			☐Complies ☐Does Not ☐Not Observable ☐Not Applicable	**Exception:** Requirement does not apply.
6.5.10 [ME73][1]	Doors separating conditioned space from the outdoors have controls that disable/reset heating and cooling system when open.			☐Complies ☐Does Not ☐Not Observable ☐Not Applicable	Requirement will be met.

Additional Comments/Assumptions:

1	High Impact (Tier 1)	2	Medium Impact (Tier 2)	3	Low Impact (Tier 3)

Section # & Req.ID	Rough-In Electrical Inspection	Complies?	Comments/Assumptions
8.4.2 [EL10][2]	At least 50% of all 125 volt 15- and 20-Amp receptacles are controlled by an automatic control device.	☐Complies ☐Does Not ☐Not Observable ☐Not Applicable	Requirement will be met.
8.4.3 [EL11][2]	New buildings have electrical energy use measurement devices installed. Where tenant spaces exist, each tenant is monitored separately. In buildings with a digital control system the energy use is transmitted to to control system and displayed graphically.	☐Complies ☐Does Not ☐Not Observable ☐Not Applicable	Requirement will be met.
10.4.1 [EL9][2]	Electric motors meet requirements where applicable.	☐Complies ☐Does Not ☐Not Observable ☐Not Applicable	Requirement will be met.

Additional Comments/Assumptions:

1	High Impact (Tier 1)	2	Medium Impact (Tier 2)	3	Low Impact (Tier 3)

Section # & Req.ID	Final Inspection	Complies?	Comments/Assumptions
6.4.3.1.2 [FI3][3]	Thermostatic controls have a 5 °F deadband.	☐Complies ☐Does Not ☐Not Observable ☐Not Applicable	Requirement will be met.
6.4.3.2 [FI20][3]	Temperature controls have setpoint overlap restrictions.	☐Complies ☐Does Not ☐Not Observable ☐Not Applicable	Requirement will be met.
6.4.3.3.1 [FI21][3]	HVAC systems equipped with at least one automatic shutdown control.	☐Complies ☐Does Not ☐Not Observable ☐Not Applicable	Requirement will be met.
6.4.3.3.2 [FI22][3]	Setback controls allow automatic restart and temporary operation as required for maintenance.	☐Complies ☐Does Not ☐Not Observable ☐Not Applicable	Requirement will be met.
6.4.3.12 [FI200][3]	Air economizer has a fault detection and diagnostics (FDD) system (see details for configuration and operational requirements).	☐Complies ☐Does Not ☐Not Observable ☐Not Applicable	Requirement will be met.
6.4.3.6 [FI6][3]	When humidification and dehumidification are provided to a zone, simultaneous operation is prohibited. Humidity control prohibits the use of fossil fuel or electricity to produce RH > 30% in the warmest zone humidified and RH < 60% in the coldest zone dehumidified.	☐Complies ☐Does Not ☐Not Observable ☐Not Applicable	Requirement will be met.
6.7.2.1 [FI7][3]	Furnished HVAC as-built drawings submitted within 90 days of system acceptance.	☐Complies ☐Does Not ☐Not Observable ☐Not Applicable	Requirement will be met.
6.7.2.2 [FI8][3]	Furnished O&M manuals for HVAC systems within 90 days of system acceptance.	☐Complies ☐Does Not ☐Not Observable ☐Not Applicable	Requirement will be met.
6.7.2.3 [FI9][3]	An air and/or hydronic system balancing report is provided for HVAC systems serving zones >5,000 ft2 of conditioned area.	☐Complies ☐Does Not ☐Not Observable ☐Not Applicable	Requirement will be met.
7.4.4.3 [FI11][3]	Public lavatory faucet water temperature <=110°F.	☐Complies ☐Does Not ☐Not Observable ☐Not Applicable	Requirement will be met.
7.4.4.4 [FI12][3]	Controls are installed that limit the operation of a recirculation pump installed to maintain temperature of a storage tank.	☐Complies ☐Does Not ☐Not Observable ☐Not Applicable	Requirement will be met.
10.4.3 [FI24][2]	Elevators are designed with the proper lighting, ventilation power, and standby mode.	☐Complies ☐Does Not ☐Not Observable ☐Not Applicable	**Exception:** Requirement does not apply.

Additional Comments/Assumptions:

1	High Impact (Tier 1)	2	Medium Impact (Tier 2)	3	Low Impact (Tier 3)

KLH ENGINEERS
MECHANICAL/ELECTRICAL ENGINEERS
WWW.KLHENGRS.COM
KOHRS LONNEMANN HEIL ENGINEERS, INC.
444 SOUTH FRONT STREET
COLUMBUS, OHIO 43215
800-354-9783 614-228-2180
614-228-2183 FAX
FORT THOMAS, KENTUCKY
LEXINGTON, KENTUCKY
LOUISVILLE, KENTUCKY
NEW YORK, NEW YORK

PERMIT SET - FOR CONSTRUCTION

© 2022 STARBUCKS COFFEE COMPANY

STARBUCKS COFFEE COMPANY
2401 UTAH AVENUE SOUTH
SEATTLE, WASHINGTON 98134
(206) 318-1575

THESE DRAWINGS AND PROJECT MANUAL ARE CONFIDENTIAL AND SHALL REMAIN THE SOLE PROPERTY OF STARBUCKS CORPORATION, WHICH IS THE OWNER OF THE COPYRIGHT IN THIS WORK. THEY SHALL NOT BE REPRODUCED (IN WHOLE OR IN PART), SHARED WITH THIRD PARTIES OR USED IN ANY MANNER ON OTHER PROJECTS OR EXTENSIONS TO THIS PROJECT WITHOUT THE PRIOR WRITTEN CONSENT OF STARBUCKS CORPORATION. THESE DRAWINGS AND SPECIFICATIONS ARE INTENDED TO EXPRESS DESIGN INTENT FOR A PROTOTYPICAL STARBUCKS STORE (WHICH IS SUBJECT TO CHANGE AT ANYTIME) AND DO NOT REFLECT ACTUAL SITE CONDITIONS. NEITHER PARTY SHALL HAVE ANY OBLIGATION NOR LIABILITY TO THE OTHER (EXCEPT STATED ABOVE) UNTIL A WRITTEN AGREEMENT IS FULLY EXECUTED BY BOTH PARTIES.

STARBUCKS TEMPLATE VERSION i2022.10.23

Gensler
MAIN OFFICE
M. ARTHUR GENSLER JR. & ASSOCIATES
FL QUALIFIER'S LIC. NO. AR96486
45 FREMONT ST., SUITE 1500
SAN FRANCISCO, CA 94105 USA
Tel (415) 433.3700
Fax (415) 836.4599
SATELLITE OFFICE
10 NORTH PARK PLACE
SUITE 400
MORRISTOWN, NJ 07960 USA
Tel (973) 290.8500

PROJECT NAME:
ST LUCIE WEST & SW CASHEMERE BLVD

PROJECT ADDRESS:
920 SW SAINT LUCIE BLVD,
PORT ST.LUCIE, FL 34986

STORE #: 81616
PROJECT #: 101357-001
ISSUE DATE: 06-27-2025
STORE DESIGNER: ASHLEY SUEIRAS
DESIGN MANAGER: GENSLER
ENGINEER OF RECORD: KLH ENGINEERS

Revision Schedule

Rev	Date	By	Description

SHEET TITLE:
MECHANICAL ENERGY CODE CALCULATIONS
SCALE: AS SHOWN

SHEET NUMBER:
M006

STARBUCKS OWNER'S PROJECT REQUIREMENTS AND BASIS OF DESIGN

ASHRAE CLIMATE ZONE	1-8, A-C	
STARBUCKS' CLIMATE ZONE	A/B	
SEISMIC		
RESTRAINTS	WHEN REQUIRED BY CODE	
HVAC CONTROL SYSTEM (AT LEAST ONE REQUIRED)		
EMS	VENSTAR SURVEYOR	
SCHEDULE	MINUS 1 HOUR OPEN , PLUS 1/2 HOUR CLOSE	
BUILDING DIRECT DIGITAL CONTROLS	LL BUILDING SYSTEM	
DEMAND CONTROL VENTILATION	PREFERRED FOR FOH	
C02 SETPOINT FOR DCV AND STAND ALONE MONITORS	1000 PPM	1
OUTSIDE AIR	2023 FLORIDA BUILDING CODE - MECHANICAL	
ECONOMIZER	REQUIRED IN ALL CLIMATE ZONES	
COOLING CAPACITY	ASHRAE 90.1 / ASHRAE 55	
HEATING	GAS PREFERRED WHEN AVAILABLE	
HVAC SYSTEMS		
DEDICATED UNIT(S)	PACKAGED OR SPLIT	
BASE BUILDING SYSTEM	PER BUILDING / LL	
DESIGN TEMPERATURES - Using the ASRAE Design Day and MEP Guidelines to achieve coldest seasonal setpoint for cooling and warmest seasonal setpoint for heating		
OCCUPIED COOLING	75°F	
UNOCCUPIED COOLING	76°F	1
OCCUPIED HEATING	68°F	
UNOCCUPIED HEATING	60°F	
DEADBAND	+/- 2°F	
TEMP OVERRIDE LIMIT	2 HOURS	
EXHAUST - Greenheck		
RESTROOMS	MIN 80 CFM / RESTROOM NET ABOVE SUPPLY	
OVENS	70 CFM / OVEN	
SCHEDULE	SAME AS RTU SCHEDULE	
CONTROLS	CONTINUOUS	
AIR CURTAIN		
SYSTEM	AS REQUIRED BY CODE	
CONTROL	TIED TO MICROSWITCH IN DT WINDOW	
HVAC SCHEDULE		
EXHAUST SCHEDULE		
EMS SCHEDULE		

MECHANICAL SCOPE OF WORK SUMMARY

THE FOLLOWING SCOPE OF WORK IS BASED ON THE LANDLORD'S WORKLETTER EXHIBIT C. THIS SCOPE OF WORK IS NOT INTENDED TO INDICATE THE FULL SCOPE, BUT ONLY A BROAD SUMMARY. THE GENERAL CONTRACTOR SHALL REFERENCE THE COMPLETE WORKLETTER FOR A MORE DETAILED DESCRIPTION OF WORK BY BOTH PARTIES. ANY QUESTIONS REGARDING SCOPE SHALL BE BROUGHT TO STARBUCKS ATTENTION FOR CLARIFICATION. RESPONSIBILITY INDICATED BELOW MEANS FURNISHED, PERMITTED AND INSTALLED BY THE PARTY INDICATED.

WORK DESCRIPTION	RESPONSIBILITY	
	LANDLORD	STARBUCKS
HVAC UNITS, CURB AND STRUCTURAL	X	
HVAC UNIT ECONOMIZERS AND RELIEF	X	
SMOKE DETECTORS IN DUCTWORK AND INTERLOCK	X	
THERMOSTATS AND CONTROLS	X	
EMS CONTROLS	X	
MOTORIZED DAMPERS FOR BACKDRAFT		X
EXHAUST FAN, CURB AND MOTORIZED DAMPER	X	
DUCTWORK 12" OR LARGER		X
DUCTWORK 10" OR SMALLER		X
MOTORIZED DAMPERS FOR CONNECTIONS	N/A	
GAS SERVICE AND METER	N/A	
GAS PIPING TO SPACE	N/A	
GAS PIPING TO HOT WATER TANK	N/A	
GAS PIPING TO HVAC UNITS	N/A	
LOUVERS FOR INTAKES, EXHAUST AND PRESSURE RELIEF	N/A	

KEYED NOTES

M01 UNDERCUT DOOR 1" TO ALLOW FOR RETURN AIRFLOW FOR DOOR INDICATED.

M02 WALL MOUNTED THERMOSTAT AT 44" (1120MM) AFF. REFER TO LANDLORD WORK LETTER, MECHANICAL NOTES AND MECHANICAL SCHEDULE FOR THERMOSTAT SOURCING AND RESPONSIBILITY. MULTIPLE THERMOSTATS SHALL BE STACKED IN A VERTICAL CONFIGURATION WITH A MINIMUM 8" (200MM) CLEARANCE BELOW EACH THERMOSTAT.

M03 REMOTE TEMPERATURE SENSOR AT 60" (1524MM) AFF.

M04 PROVIDE CO2 SENSOR AS SHOWN AT 44" (1120MM) AFF. CO2 SET POINTS: 100% DESIGN OA RATE = 1000 PPM. FOR EQC2 CREDIT SET POINT = 800 PPM.

GENERAL NOTES

A. SEE ARCHITECTURAL SHEETS FOR PAINTING AND COLORS OF ALL EXPOSED DUCTWORK, DIFFUSERS AND GRILLES.

B. SEE ARCHITECTURAL SHEETS FOR DIMENSIONED DIFFUSER & EXPOSED DUCT LOCATIONS.

C. DIFFUSERS AND RETURN GRILLES SHALL BE CENTERED IN CEILING TILE, UNLESS OTHERWISE NOTED.

D. REFERENCE LANDLORD WORK LETTER FOR DIVISION OF MECHANICAL SCOPE OF WORK AND COORDINATE WITH STARBUCKS CONSTRUCTION MANAGER.

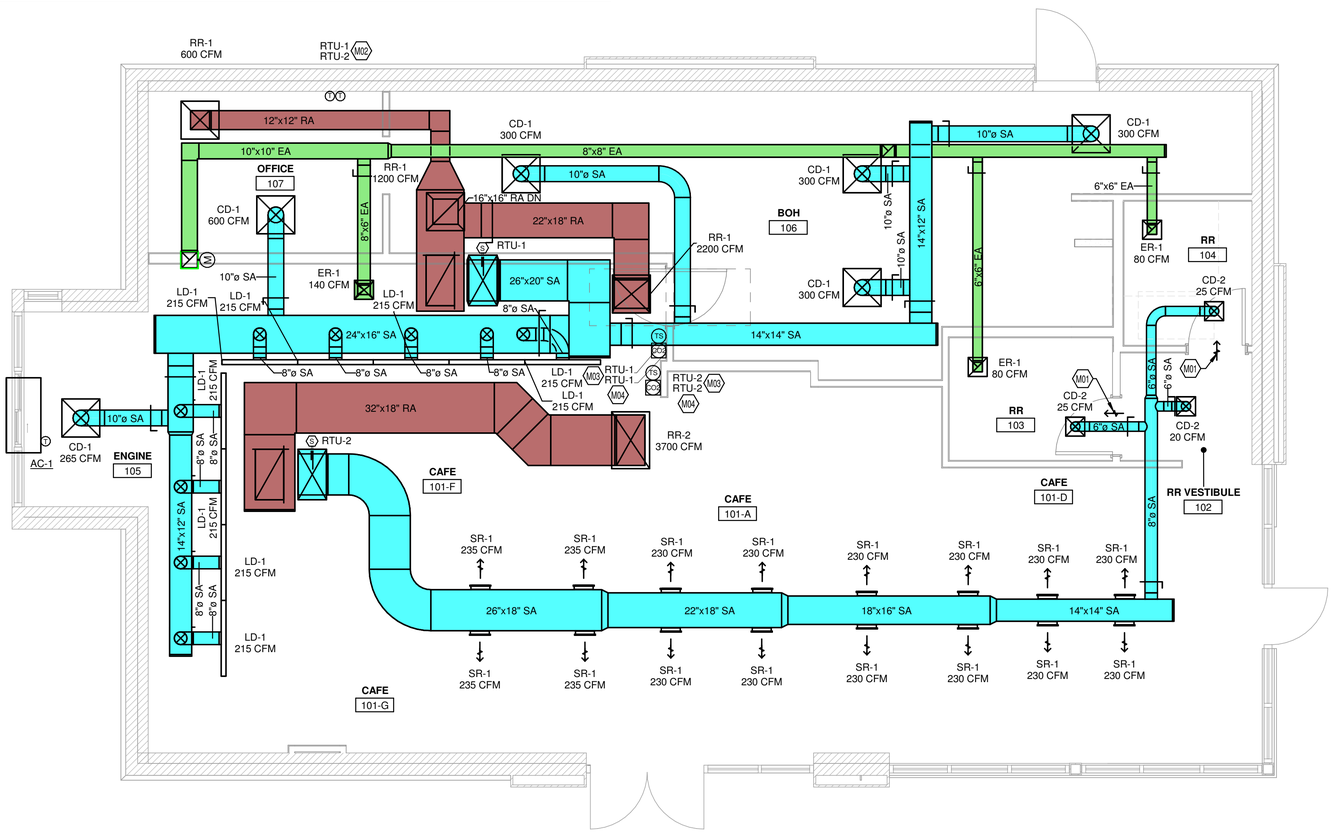

1 MECHANICAL FLOOR PLAN
1/4" = 1'-0"

KLH ENGINEERS
MECHANICAL/ELECTRICAL ENGINEERS
WWW.KLHENGRS.COM
KOHRS LONNEMANN HEIL ENGINEERS, INC.
444 SOUTH FRONT STREET
COLUMBUS, OHIO 43215
800-354-9783 614-228-2180
614-228-2183 FAX
FORT THOMAS, KENTUCKY
LEXINGTON, KENTUCKY
LOUISVILLE, KENTUCKY
NEW YORK, NEW YORK

PERMIT SET - FOR CONSTRUCTION

© 2022 STARBUCKS COFFEE COMPANY

STARBUCKS COFFEE COMPANY
2401 UTAH AVENUE SOUTH
SEATTLE, WASHINGTON 98134
(206) 318-1575

THESE DRAWINGS AND PROJECT MANUAL ARE CONFIDENTIAL AND SHALL REMAIN THE SOLE PROPERTY OF STARBUCKS CORPORATION, WHICH IS THE OWNER OF THE COPYRIGHT IN THIS WORK. THEY SHALL NOT BE REPRODUCED (IN WHOLE OR IN PART), SHARED WITH THIRD PARTIES OR USED IN ANY MANNER ON OTHER PROJECTS OR EXTENSIONS TO THIS PROJECT WITHOUT THE PRIOR WRITTEN CONSENT OF STARBUCKS CORPORATION. THESE DRAWINGS AND SPECIFICATIONS ARE INTENDED TO EXPRESS DESIGN INTENT FOR A PROTOTYPICAL STARBUCKS STORE (WHICH IS SUBJECT TO CHANGE AT ANYTIME) AND DO NOT REFLECT ACTUAL SITE CONDITIONS. NEITHER PARTY SHALL HAVE ANY OBLIGATION NOR LIABILITY TO THE OTHER (EXCEPT STATED ABOVE) UNTIL A WRITTEN AGREEMENT IS FULLY EXECUTED BY BOTH PARTIES.

STARBUCKS TEMPLATE VERSION i2022.10.23

Gensler
MAIN OFFICE
M. ARTHUR GENSLER JR. & ASSOCIATES
FL QUALIFIER'S LIC. NO. AR96486
45 FREMONT ST, SUITE 1500
SAN FRANCISCO, CA 94105 USA
Tel (415) 433.3700
Fax (415) 836.4599
SATELLITE OFFICE
10 NORTH PARK PLACE
SUITE 400
MORRISTOWN, NJ 07960 USA
Tel (973) 290.8500

PROJECT NAME:
ST LUCIE WEST & SW CASHEMERE BLVD

PROJECT ADDRESS:
920 SW SAINT LUCIE BLVD,
PORT ST.LUCIE, FL 34986

STORE #: 81616
PROJECT #: 101357-001
ISSUE DATE: 06-27-2025
STORE DESIGNER: ASHLEY SUEIRAS
DESIGN MANAGER: GENSLER
ENGINEER OF RECORD: KLH ENGINEERS

Revision Schedule

Rev	Date	By	Description
1	9/4/2025		Revision 1

SHEET TITLE:
MECHANICAL DESIGN PLAN
SCALE: AS SHOWN

SHEET NUMBER:
M101

9/4/2025 2:30:12 PM C:\Users\dburdine\Documents\Revit\27472.00-23-MEP-SBX- Port St, St. Lucie, FL_dburdine.rvt

KEYED NOTES

M05 BALANCE SUPPLY, RETURN, AND VENTILATION AIRFLOW OF EXISTING ROOFTOP UNIT BY LANDLORD AS SHOWN IN MECHANICAL SCHEDULE.

M06 CONNECT MANUFACTURER PROVIDED REFRIGERANT LINE SETS FROM REMOTE CONDENSER ON ROOF TO ICE MACHINE. LINE SETS TO BE SIZED BY MANUFACTURER. SEE ARCHITECTURAL PLAN FOR ICE MACHINE LOCATION. INSTALL CONDENSING UNIT ON ROOF SUPPORTS, SEE DETAIL.

GENERAL NOTES

1. ALL IS NEW UNLESS NOTED OTHERWISE.
2. INSULATE DUCTWORK PER CODE AND SPEC. REQUIREMENTS ON M-0001, M002 AND M003 (ALL NOT SHOWN). COORDINATE CLEARANCE REQUIREMENTS FOR ADDED INSULATION.
3. SEE ARCH. SHEETS FOR PAINTING AND COLORS FOR ALL EXPOSED DUCTWORK, DIFFUSERS, GRILLES, ETC..
4. COORDINATE WITH ELECTRICAL CONTRACTOR FOR POWER CONNECTIONS TO ALL MECHANICAL EQUIPMENT.
5. REFERENCE LANDLORD WORK LETTER FOR DIVISION OF ELECTRICAL SCOPE OF WORK AND COORDINATE WITH STARBUCKS CONSTRUCTION MANAGER.

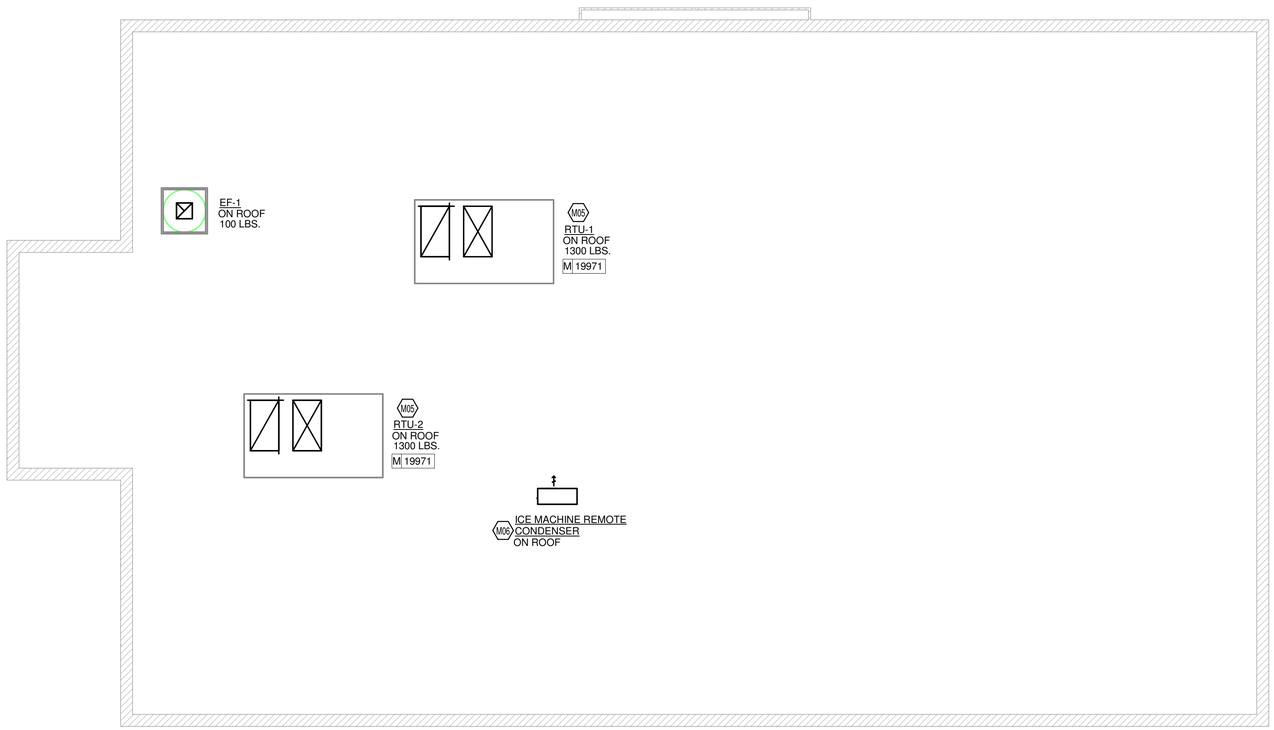

1 MECHANICAL ROOF PLAN
1/4" = 1'-0"

KLH ENGINEERS
MECHANICAL/ELECTRICAL ENGINEERS
WWW.KLHENGRS.COM
KOHRS LONNEMANN HEIL ENGINEERS, INC.
444 SOUTH FRONT STREET
COLUMBUS, OHIO 43215
800-354-9793 614-228-2180
614-228-2183 FAX
FORT THOMAS, KENTUCKY
LEXINGTON, KENTUCKY
LOUISVILLE, KENTUCKY
NEW YORK, NEW YORK

PERMIT SET - FOR CONSTRUCTION

© 2022 STARBUCKS COFFEE COMPANY

STARBUCKS COFFEE COMPANY
2401 UTAH AVENUE SOUTH
SEATTLE, WASHINGTON 98134
(206) 318-1575

THESE DRAWINGS AND PROJECT MANUAL ARE CONFIDENTIAL AND SHALL REMAIN THE SOLE PROPERTY OF STARBUCKS CORPORATION, WHICH IS THE OWNER OF THE COPYRIGHT IN THIS WORK. THEY SHALL NOT BE REPRODUCED (IN WHOLE OR IN PART), SHARED WITH THIRD PARTIES OR USED IN ANY MANNER ON OTHER PROJECTS OR EXTENSIONS TO THIS PROJECT WITHOUT THE PRIOR WRITTEN CONSENT OF STARBUCKS CORPORATION. THESE DRAWINGS AND SPECIFICATIONS ARE INTENDED TO EXPRESS DESIGN INTENT FOR A PROTOTYPICAL STARBUCKS STORE (WHICH IS SUBJECT TO CHANGE AT ANYTIME) AND DO NOT REFLECT ACTUAL SITE CONDITIONS. NEITHER PARTY SHALL HAVE ANY OBLIGATION NOR LIABILITY TO THE OTHER (EXCEPT STATED ABOVE) UNTIL A WRITTEN AGREEMENT IS FULLY EXECUTED BY BOTH PARTIES.

STARBUCKS TEMPLATE VERSION i2022.10.23

Gensler
MAIN OFFICE
M. ARTHUR GENSLER JR. & ASSOCIATES
FL QUALIFIER'S LIC. NO. AR96486
45 FREMONT ST, SUITE 1500
SAN FRANCISCO, CA 94105 USA
Tel (415) 433.3700
Fax (415) 836.4599
SATELLITE OFFICE
10 NORTH PARK PLACE
SUITE 400
MORRISTOWN, NJ 07960 USA
Tel (973) 290.8500

PROJECT NAME:
ST LUCIE WEST & SW CASHEMERE BLVD

PROJECT ADDRESS:
920 SW SAINT LUCIE BLVD,
PORT ST.LUCIE, FL 34986

STORE #:	81616
PROJECT #:	101357-001
ISSUE DATE:	06-27-2025
STORE DESIGNER:	ASHLEY SUEIRAS
DESIGN MANAGER:	GENSLER
ENGINEER OF RECORD:	KLH ENGINEERS

Revision Schedule

Rev	Date	By	Description

SHEET TITLE:
MECHANICAL ROOF PLAN
SCALE: AS SHOWN

SHEET NUMBER:
M102

9/4/2025 2:30:13 PM C:\Users\dburdine\Documents\Revit\27472.00-23-MEP-SBX- Port St. Lucie, FL_dburdine.rvt

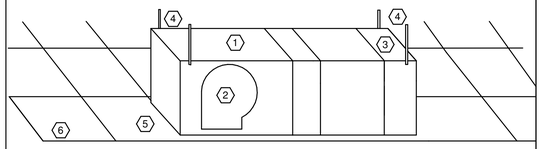

KEYED NOTES:

1. AIR CURTAIN, RECESSED IN CEILING
2. FAN
3. 1" FILTER WITH ACCESSORIES
4. GALVANIZED HANGERS (CONNECT TO STRUCTURE)
5. ADJUSTABLE FLANGE AT PERIMETER OF UNIT FOR RECESSES APPLICATION
6. CEILING SYSTEM

238239.19-02 - CEILING RECESSED AIR CURTAIN

SCALE: NONE

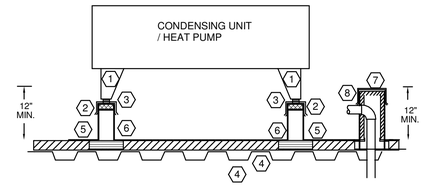

KEYED NOTES:

1. ANCHOR UNIT TO CURB
2. PRESSURE TREATED WOOD NAILER
3. VIBRATION ISOLATORS
4. ROOF DECK
5. PREFABRICATED EQUIPMENT SUPPORT
6. SINGLE MEMBRANE ROOFING, FLASH PER MFG'R RECOMMENDATIONS. FLASH UP AND OVER WOOD NAILER.
7. PREFABRICATED DOG HOUSE
8. SEAL AND FLASH OPENING

GENERAL NOTES:

A. ON PROJECTS WITH BUILT-UP ROOFS, ADD CANT ON EQUIPMENT SUPPORTS AND PREFABRICATE PIPING CHASE
B. PLACE EQUIPMENT ACROSS BAR JOIST OR ADD ADDITIONAL STRUCTURAL STRUCTURAL STEEL AS NECESSARY TO CARRY EQUIPMENT WEIGHT
C. LOCATE A MINIMUM OF 10'-0" FROM EDGE OF ROOF AND ROOF HATCH.

236213.00-02 - EQUIPMENT SUPPORT

SCALE: NONE

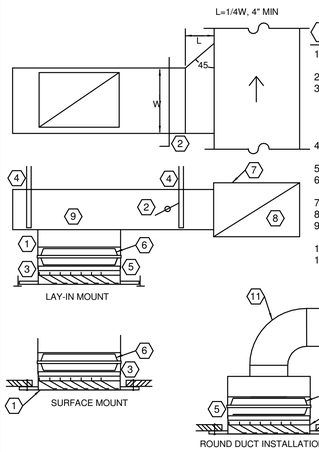

KEYED NOTES:

1. DUCT, COLLAR AND RETURN/EXHAUST REGISTER
2. MANUAL VOLUME DAMPER
3. SECURE TO CEILING PER MANUFACTURER'S RECOMMENDATIONS AND PER CEILING FINISH. PROVIDE GRID CLIPS PER MFG'R REQUIREMENTS
4. HANGER, SECURE TO STRUCTURE AND DUCTWORK
5. ATTACH DUCT TO REGISTER
6. BALANCING DAMPER FOR FINAL BALANCING
7. SHEET METAL DUCTWORK
8. MAIN RETURN/EXHAUST DUCT
9. TAP DROP TO RETURN/EXHAUST REGISTER INTO BOTTOM OF BRANCH
10. SPIN IN FITTING
11. HARD SHEET METAL ELBOW AT CONNECTION TO AIR DEVICE

233713.00-21 - RETURN/EXHAUST REGISTER INSTALLATION

SCALE: NONE

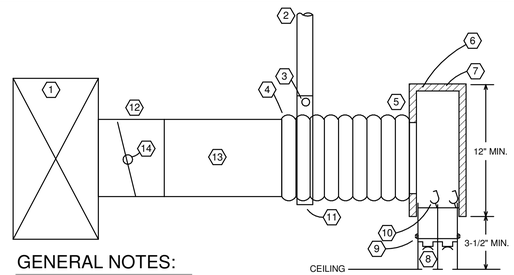

GENERAL NOTES:

A. WHERE LINEAR DIFFUSER IS ADJACENT TO WINDOWS, ADJUST PATTERN CONTROLLER TO DIRECT AIRFLOW HORIZONTALLY TOWARDS WINDOWS.

KEYED NOTES:

1. LOW PRESSURE SUPPLY DUCT
2. 1" WIDE BAND AND CLAMP
3. SHEET METAL SCREW
4. INSULATED FLEX. DUCT MAX LENGTH 5'-0" ABOVE ACCESSIBLE CEILINGS ONLY.
5. PEEL BACK INSULATION AND PROVIDE STRAPPING AND SHEET METAL SCREWS AT FLEX CONNECTION TO DUCT. THEN PROVIDE STRAPPING AROUND INSULATION
6. SHEET METAL PLENUM
7. 1/2" ACOUSTICAL LINING
8. PATTERN CONTROLLER
9. SCREWS, MIN 6" ON CENTER & SEAL AIRTIGHT, TYP, BOTH SIDES
10. VOLUME ADJUSTER
11. BAND CLAMP MAXIMUM SAG 1/2" PER FOOT BETWEEN SUPPORT BRACING
12. TAKE-OFF SPIN-IN FITTING WITH ADJUSTABLE MANUAL DAMPER. LOCATE ABOVE ACCESSIBLE CEILING OR PROVIDE ACCESS PANEL BELOW DAMPER.
13. SHEET METAL BRANCH DUCT
14. MANUAL VOLUME DAMPER

233713.00-14 - PLENUM-LINEAR DIFFUSER

SCALE: NONE

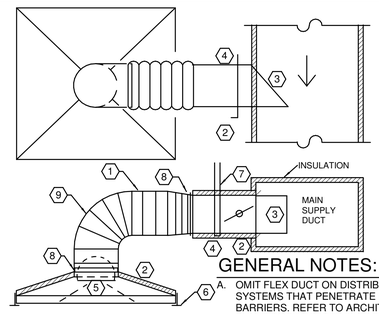

GENERAL NOTES:

A. OMIT FLEX DUCT ON DISTRIBUTION SYSTEMS THAT PENETRATE 1-HR FIRE BARRIERS. REFER TO ARCHITECTURAL PLANS FOR LOCATIONS OF FIRE BARRIERS.

KEYED NOTES:

1. MAXIMUM LENGTH OF INSUL. FLEX DUCT EQUALS 5 FEET. FLEX NOT PERMITTED IN INACCESSIBLE CEILINGS
2. INSULATED DUCT, COLLAR AND DIFFUSER BY HVAC CONTRACTOR
3. SCOOP
4. SPIN IN FITTING WITH MANUAL VOLUME DAMPER
5. INTERNAL BUTTERFLY DAMPER FOR DRYWALL APPLICATIONS ONLY. (PROVIDE KEY FOR ADJUSTMENT)
6. SECURE TO CEILING PER MANUFACTURER'S RECOMMENDATIONS AND PER CEILING FINISH. PROVIDE GRID CLIPS PER MFG'R REQUIREMENTS. PROVIDE FRAMING FOR DRYWALL INSTALLATION.
7. HANGER, SECURE TO STRUCTURE AND DUCTWORK
8. PEEL BACK INSULATION AND PROVIDE STRAPPING AND SHEET METAL SCREWS AT FLEX CONNECTION TO DUCT. THEN PROVIDE STRAPPING AROUND INSULATION
9. SUPPORT FLEX TO PREVENT COLLAPSING

233713.00-04 - DIFFUSER INSTALLATION TYPICAL

SCALE: NONE

GENERAL NOTES:

1. PROVIDE SPLITTER DAMPER (SD) AT ALL MAIN BRANCH TAKEOFFS
2. PROVIDE MANUAL VOLUME DAMOERS AT ALL BRANCH TAKEOFFS
3. PROVIDE MINIMUM 3 TIMES STRAIGHT INLET DIAMETER TO ALL VAV TERMINAL DEVICES
4. DAMPER NOT REQUIRED AT TERMINAL DEVICE TAKEOFF
5. ALL MANUAL DAMPERS SHALL BE LOCATED IN AN ACCESSIBLE CEILING. PROVIDE ACCESS PANEL AS REQUIRED.

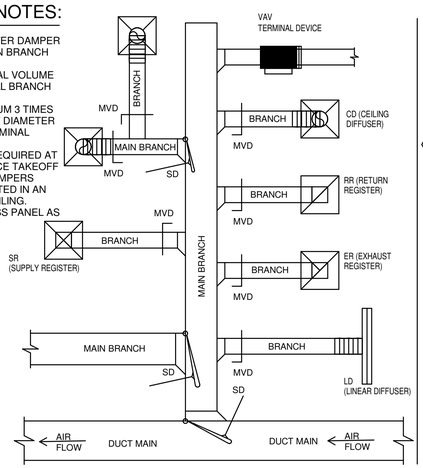

233300.00-01 - MANUAL DAMPER DETAIL

SCALE: NONE

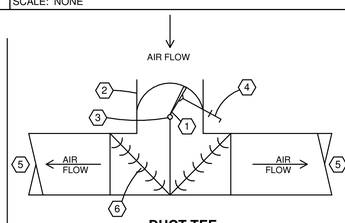

DUCT TEE

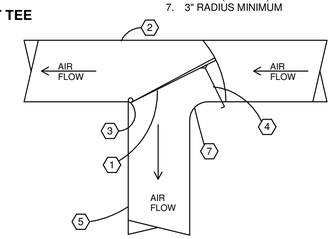

MAIN BRANCH

KEYED NOTES:

1. 20 GAUGE DOUBLE SHEET METAL AIR FOIL FULL DEPTH OF MAIN DUCT UP TO 12" WIDE BRANCHES 18 GAUGE ON WIDER BRANCHES
2. MAIN DUCT
3. GALVANIZED 3/16" ROD
4. VENTLOCK NO. 600-3 DAMPER BLADE, BRACKTER & LOCKING BALL JOINT WITH 1/4" Ø GALVANIZED OPERATOR PAD
5. BRANCH MAIN DUCT
6. DOUBLE THICKNESS TURNING VANES (TYPICAL)
7. 3" RADIUS MINIMUM

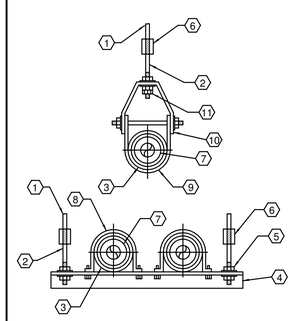

KEYED NOTES:

1. CONNECT TO STRUCTURE TYP.
2. GALVANIZED THREADED HANGER RODS, TYP. SEE SPECS.
3. INSULATION PROTECTIVE SADDLE, TYP.
4. 1-1/2" x 1-1/2" x 1/4" STEEL ANGLE HANGER PRIME PAINTED.
5. PLATED BUT & WASHER TOP & BOTTOM.
6. TYP. VIBRATION ISOLATORS IN MECH. ROOMS, TYP.
7. INSULATION AS SPECIFIED, TYP.
8. REFER TO SPECS FOR CLAMP SPACING, TYP.
9. SADDLE
10. CLEVIS TYPE HANGER (PRIME PAINTED)
11. PLATED DOUBLE NUT AND WASHER

GENERAL NOTES:

A. IF HOT WATER PIPING IS ON THE SAME RACK AS OTHER PIPING, THE HOT WATER SHALL BE ON ROLLER SUPPORTS.
B. REGARDLESS OF WHAT IS INDICATED ON ANY FLOOR PLANS OR OTHER DETAILS THE ACTUAL INSTALLATION OF ANY HYDRONIC PIPING SHALL CONFORM TO WHAT IS SHOWN BELOW

232113.23-14 - PIPE HANGERS TYPICAL

SCALE: NONE

KLH ENGINEERS
KOHRS LONNEMANN HEIL ENGINEERS, INC.
444 SOUTH FRONT STREET
COLUMBUS, OHIO 43215
800-354-9783 614-228-2180
614-228-2183 FAX

MECHANICAL/ELECTRICAL ENGINEERS
WWW.KLHENGRS.COM

FORT THOMAS, KENTUCKY
LEXINGTON, KENTUCKY
LOUISVILLE, KENTUCKY
NEW YORK, NEW YORK

PERMIT SET - FOR CONSTRUCTION

© 2022 STARBUCKS COFFEE COMPANY

STARBUCKS COFFEE COMPANY
2401 UTAH AVENUE SOUTH
SEATTLE, WASHINGTON 98134
(206) 318-1575

THESE DRAWINGS AND PROJECT MANUAL ARE CONFIDENTIAL AND SHALL REMAIN THE SOLE PROPERTY OF STARBUCKS CORPORATION, WHICH IS THE OWNER OF THE COPYRIGHT IN THIS WORK. THEY SHALL NOT BE REPRODUCED (IN WHOLE OR IN PART), SHARED WITH THIRD PARTIES OR USED IN ANY MANNER ON OTHER PROJECTS OR EXTENSIONS TO THIS PROJECT WITHOUT THE PRIOR WRITTEN CONSENT OF STARBUCKS CORPORATION. THESE DRAWINGS AND SPECIFICATIONS ARE INTENDED TO EXPRESS DESIGN INTENT FOR A PROTOTYPICAL STARBUCKS STORE (WHICH IS SUBJECT TO CHANGE AT ANYTIME) AND DO NOT REFLECT ACTUAL SITE CONDITIONS. NEITHER PARTY SHALL HAVE ANY OBLIGATION NOR LIABILITY TO THE OTHER (EXCEPT STATED ABOVE) UNTIL A WRITTEN AGREEMENT IS FULLY EXECUTED BY BOTH PARTIES.

STARBUCKS TEMPLATE VERSION i2022.10.23

Gensler
MAIN OFFICE
M. ARTHUR GENSLER JR. & ASSOCIATES
FL QUALIFIER'S LIC. NO. AR96486
45 FREMONT ST, SUITE 1500
SAN FRANCISCO, CA 94105 USA
Tel (415) 433.3700
Fax (415) 836.4599
SATELLITE OFFICE
10 NORTH PARK PLACE
SUITE 400
MORRISTOWN, NJ 07960 USA
Tel (973) 290.8500

PROJECT NAME:
ST LUCIE WEST & SW
CASHEMERE BLVD

PROJECT ADDRESS:
920 SW SAINT LUCIE BLVD,
PORT ST.LUCIE, FL 34986

STORE #:	81616
PROJECT #:	101357-001
ISSUE DATE:	06-27-2025
STORE DESIGNER:	ASHLEY SUEIRAS
DESIGN MANAGER:	GENSLER
ENGINEER OF RECORD:	KLH ENGINEERS

Revision Schedule

Rev	Date	By	Description

SHEET TITLE:
MECHANICAL DETAILS

SCALE: AS SHOWN

SHEET NUMBER:
M501

9/4/2025 2:30:16 PM C:\Users\dburdine\Documents\Revit\27472.00-23-MEP-SBX- Port St. St. Lucie, FL_dburdine.rvt

HVAC LOAD SCHEDULE

THE HEATING AND COOLING LOAD CALCULATIONS ARE BASED ON THE RTS (RADIANT TIME SERIES) METHOD. ASSUMPTIONS AND EXECUTION OF THESE METHODS ARE PER ASHRAE 183-2007 STANDARD FOR PEAK COOLING AND HEATING LOAD CALCULATIONS IN BUILDINGS EXCEPT LOW-RISE RESIDENTIAL BUILDINGS.

COOLING LOAD BREAKDOWN -
SUMMER DESIGN DB TEMP: 92 F,
SUMMER DESIGN WB TEMP: 77 F

CROOF	SENSIBLE HEAT GAIN FROM ROOF
CWALL	SENSIBLE HEAT GAIN FROM EXTERIOR WALLS
CPART	SENSIBLE HEAT GAIN FROM PARTITIONS
CGLASS	SENSIBLE HEAT GAIN FROM GLAZING
CSOLAR	SENSIBLE HEAT GAIN FROM SOLAR GAIN THROUGH GLAZING
CLIGHTS	SENSIBLE HEAT GAIN FROM INTERIOR LIGHTING
CEQUIP	SENSIBLE HEAT GAIN FROM PLUG LOADS, COMPUTERS, ETC.
CPSENS	SENSIBLE HEAT GAIN FROM PEOPLE
CSSENS	TOTAL SENSIBLE HEAT GAIN TO SPACE
CFAN	SENSIBLE HEAT GAIN FROM AIR HANDLER FAN
COAS	SENSIBLE HEAT GAIN FROM OUTDOOR VENTILATION AIR
CTSENS	TOTAL SENSIBLE HEAT GAIN
CPLAT	LATENT HEAT GAIN FROM PEOPLE
COAL	LATENT HEAT GAIN FROM OUTDOOR VENTILATION AIR
CTLAT	TOTAL LATENT HEAT GAIN
CTOT	TOTAL HEAT GAIN (SENSIBLE + LATENT)

HEATING LOAD BREAKDOWN -
WINTER DESIGN DB TEMP: 37 F

HROOF	HEAT LOSS FROM ROOF
HWALL	HEAT LOSS FROM EXERIOR WALLS
HPART	HEAT LOSS FROM PARTITIONS
HGLASS	HEAT LOSS FROM GLAZING
HSLAB	HEAT LOSS FROM SLAB
HSPACE	TOTAL SENSIBLE HEAT LOSS FROM SPACE
HOA	HEAT LOSS FROM OUTDOOR VENTILATION AIR
HTOT	TOTAL HEAT LOSS

1

EQUIPMENT NAME	ZONE	CROOF	CWALL	CPART	CGLASS	CSOLAR	CLIGHTS	CEQUIP	CPSENS	CSSENS	CFAN	COAS	CTSENS	CPLAT	COAL	CTLAT	CTOT	HROOF	HWALL	HPART	HGLASS	HSLAB	HSPACE	HOA	HTOT
RTU-1	1 (RTU-1)	1.76	2.41	0	0.35	1.09	4.65	68.17	7.73	86.23	2	6.06	94.29	11.45	14.44	25.89	120.19	2	4.6	0	0.84	2.78	10.22	13.26	23.48
RTU-2	2 (RTU-2)	1.84	0.63	0	5.03	11.83	4.36	29.45	24.23	79.71	1.88	13.77	95.36	16	32.84	48.84	144.2	1.93	1.36	0	13.82	2.47	19.59	30.14	49.73

HVAC VENT SCHEDULE

NUMBER	NAME	AREA	LEVEL	CEILING HEIGHT	AIR CHANGES	OA CHANGES	# OF PEOPLE	OA PER PERSON	OA PER SQFT	REQ SA	ACT SA	REQ OA	ACT OA	ACT RETURN	ACT EXH	CRIT OA%	PRESSURE	% OPERABLE	NATURAL VENTILATION
101-A	CAFE	683	INTERIOR 1ST FLOOR	12 3/10	0	0	57	7.5	0.18	2810	3200	715	715	3700	0	21.5	NEGATIVE	0	--
101-D	CAFE	26	INTERIOR 1ST FLOOR	10 4/5	0	0	3	7.5	0.18	45	200	45	45	0	0	17	POSITIVE	0	--
101-F	CAFE	18	INTERIOR 1ST FLOOR	10 1/10	0	0	2	7.5	0.18	30	200	45	45	0	0	11.4	POSITIVE	0	--
101-G	CAFE	18	INTERIOR 1ST FLOOR	10	0	0	2	7.5	0.18	30	80	18	18	0	0	28.5	POSITIVE	0	--
102	RR VESTIBULE	48	INTERIOR 1ST FLOOR	11 1/10	0	0	0	0	0.06	20	20	4	4	0	0	18	POSITIVE	0	--
103	RR	57	INTERIOR 1ST FLOOR	8 9/10	0	0	0	0	0	15	25	6	6	0	80	0	NEGATIVE	0	--
104	RR	61	INTERIOR 1ST FLOOR	9 3/5	0	0	0	0	0	20	25	6	6	0	80	0	NEGATIVE	0	--
105	ENGINE	548	INTERIOR 1ST FLOOR	10 3/5	0	0	9	7.5	0.12	2085	2200	203	203	2200	140	7.6	NEGATIVE	0	--
106	BOH	548	INTERIOR 1ST FLOOR	9 9/10	0	0	9	7.5	0.12	1045	1200	111	111	1200	0	13.9	NEUTRAL	0	--
107	OFFICE	134	INTERIOR 1ST FLOOR	11	0	0	1	5	0.06	520	600	55	55	600	0	2.7	NEUTRAL	0	--

TOTAL AREA: 2141 SF

AIR CURTAIN W/NO HEAT SCHEDULE

PRODUCT						GENERAL		AIRFLOW					ELECTRICAL	MISC	ELECTRICAL																	PRODUCT
MARK	DESCRIPTION	MANUFACTURER	MODEL	OPERATING WEIGHT (LBS)	SECTION NUMBER	AREA SERVED	STATUS	SA (CFM)	FAN BHP	FAN HP	FAN MTR SPEED (RPM)	FAN SPEED (RPM)	EMERGENCY	ACCESSORIES	CONNECTION MARK	ELECTRIC CONNECTION SUMMARY	CH TYPE	CH FURNISHED BY	CH INSTALLED BY	CH WIRED BY	MC TYPE	MC FURNISHED BY	MC INSTALLED BY	MC WIRED BY	DC TYPE	DC FURNISHED	DC INSTALLED BY	DC WIRED BY	FA SHUTDOWN	REQUIRED TO MEET FAULT CURRENT	FAULT CURRENT	EMERGENCY	MARK
AC-1	AIR CURTAIN W/ELECTRIC HEAT	READY ACCESS	RAC-22	20	23 34 33.00	--	NEW	--	--	--	--	--	NO	--	AC-1	AC-1 - 120V/1PH, 3A FLA, 20A OCP	INT	MFR	MFR	MFR	MG	MFR	MFR	MFR	--	EC	EC	EC	NONE	FALSE	AC-1: 845	FALSE	AC-1

HVAC FAN SCHEDULE

PRODUCT						GENERAL		AIRFLOW				ELECTRICAL	MISC	ELECTRICAL																		PRODUCT
MARK	DESCRIPTION	MANUFACTURER	MODEL	OPERATING WEIGHT (LBS)	SECTION NUMBER	AREA SERVED	STATUS	EA (CFM)	ESP (IN. W.C.)	FAN BHP	FAN MTR SPEED (RPM)	EMERGENCY	ACCESSORIES	CONNECTION MARK	ELECTRIC CONNECTION SUMMARY	CH TYPE	CH FURNISHED BY	CH INSTALLED BY	CH WIRED BY	MC TYPE	MC FURNISHED BY	MC INSTALLED BY	MC WIRED BY	DC TYPE	DC FURNISHED	DC INSTALLED BY	DC WIRED BY	FA SHUTDOWN	REQUIRED TO MEET FAULT CURRENT	FAULT CURRENT	EMERGENCY	MARK
EF-1	CENTRIFUGAL ROOF EXHAUST FAN	GREENHECK	G-090-VG	100	23 34 00.00	--	BY LANDLORD	300	0.4	0.05	1347	NO	1,3	EF-1	EF-1 - 120V/1PH, 0.1 HP, 1.5A FLA	LINE	EC	EC	EC	MG	MFR	MFR	MFR	--	EC	EC	EC	NONE	FALSE	EF-1: --	FALSE	EF-1

PACKAGED ROOFTOP UNIT, ELECTRIC HEAT SCHEDULE

PRODUCT						GENERAL		AIRFLOW					COOLING								HEATING			ELECTRICAL	MISC	ELECTRICAL																		PRODUCT
MARK	DESCRIPTION	MANUFACTURER	MODEL	OPERATING WEIGHT (LBS)	SECTION NUMBER	AREA SERVED	STATUS	SA (CFM)	OA (CFM)	DCV MIN AIRFLOW (CFM)	ESP (IN. W.C.)	FAN BHP	TOTAL CALC CLG MBH	CALC SENS CLG MBH	EAT DB CLG	EAT WB CLG	LAT DB CLG	LAT WB CLG	MIN SEER	MIN EER	NOM CLG CAP (TON)	CALC HTG MBH	EAT HTG	LAT HTG	EMERGENCY	ACCESSORIES	CONNECTION MARK	ELECTRIC CONNECTION SUMMARY	CH TYPE	CH FURNISHED BY	CH INSTALLED BY	CH WIRED BY	MC TYPE	MC FURNISHED BY	MC INSTALLED BY	MC WIRED BY	DC TYPE	DC FURNISHED	DC INSTALLED BY	DC WIRED BY	FA SHUTDOWN	REQUIRED TO MEET FAULT CURRENT	FAULT CURRENT	EMERGENCY	MARK
RTU-1	PACKAGED ROOFTOP UNIT, ELECTRIC HEAT	TRANE	TSC0120F	1300	23 74 33.00	BOH	BY LANDLORD	4000	368	139.56	1	--	120.19	94.29	77	65	55	54	--	11.2	10	23.48	67	90	NO	--	RTU-1	RTU-1 - 208V/3PH, 27KW HTG, 104 MCA, 110A OCP	LOW	HC	HC	HC	MG	MFR	MFR	MFR	--	EC	EC	EC	DUCT	TRUE	RTU-1: --	FALSE	RTU-1
RTU-2	PACKAGED ROOFTOP UNIT, ELECTRIC HEAT	TRANE	TSC0120F	1300	23 74 33.00	CAFE	BY LANDLORD	3750	838	136.96	1	--	144.2	95.36	79	66	55	54	--	11.2	10	49.73	64	90	NO	--	RTU-2	RTU-2 - 208V/3PH, 27KW HTG, 104 MCA, 110A OCP	LOW	HC	HC	HC	MG	MFR	MFR	MFR	--	EC	EC	EC	DUCT	TRUE	RTU-2: --	FALSE	RTU-2

1 1 1 1

HVAC ACCESSORIES

ACCESSORIES:

1. MOTOR DAMPER
2. ECONOMIZER
3. ROOF CURB
4. HAIL GUARDS
5. INTAKE HOOD
6. VIBRATION ISOLATION
7. FLAT FILTER
8. FILTER/MIXING BOX
9. ACCESS DOOR
10. FLEX CONNECTIONS
11. MOUNTING COLLAR
12. HOT GAS BYPASS
13. FACE/BYPASS DAMPER
14. CONDENSATE PUMP
15. MOTOR GUARD
16. GREASE TRAP
17. DUCT FLANGES
18. BASE RAIL
19. HUMIDIFIER
20. CO2 SENSORS
21. ECON POWERED EXHAUST
22. ECON BAROMETRIC RELIEF
23. HOT GAS REHEAT COIL
24. SHAFT GROUNDING BRUSHES

SBX HVAC DIFFUSERS AND REGISTERS SCHEDULE

TAG	MANUFACTURER	MODEL	FACE	MOUNTING	MATERIAL	FINISH	DAMPER TYPE	BORDER STYLE
CD-1	TITUS	OMNI	24"x24"	CEILING	ALUMINUM	STANDARD WHITE	OPPOSED BLADE	LAY IN MOUNTING
CD-2	TITUS	OMNI	12"x12"	CEILING	ALUMINUM	BLACK FINISH G.C. TO FIELD PAINT TO MATCH CEILING OR WALLS	OPPOSED BLADE	SURFACE MOUNT
ER-1	TITUS	50F	12"x12"	CEILING	ALUMINUM	BLACK FINISH G.C. TO FIELD PAINT TO MATCH CEILING OR WALLS	OPPOSED BLADE	SURFACE MOUNT
LD-1	TITUS	FL-10	4'-0"-(1) 1" SLOT	CEILING	ALUMINUM	BLACK FINISH G.C. TO FIELD PAINT TO MATCH CEILING OR WALLS	OPPOSED BLADE	SURFACE MOUNT
RR-1	TITUS	50F	24"x24"	CEILING	ALUMINUM	STANDARD WHITE	OPPOSED BLADE	LAY IN MOUNTING
RR-2	TITUS	350RL	36"x24"	CEILING	ALUMINUM	BLACK FINISH G.C. TO FIELD PAINT TO MATCH CEILING OR WALLS	OPPOSED BLADE	SURFACE MOUNT
SR-1	TITUS	300FL	12"x8"	DUCT	ALUMINUM	BLACK FINISH G.C. TO FIELD PAINT TO MATCH CEILING OR WALLS	OPPOSED BLADE	SURFACE MOUNT

KLH ENGINEERS
MECHANICAL/ELECTRICAL ENGINEERS
WWW.KLHENGRS.COM
KOHRS LONNEMANN HEIL ENGINEERS, INC.
444 SOUTH FRONT STREET
COLUMBUS, OHIO 43215
800-354-9783 614-228-2180
614-228-2183 FAX
FORT THOMAS, KENTUCKY
LEXINGTON, KENTUCKY
LOUISVILLE, KENTUCKY
NEW YORK, NEW YORK

PERMIT SET - FOR CONSTRUCTION

© 2022 STARBUCKS COFFEE COMPANY

STARBUCKS COFFEE COMPANY
2401 UTAH AVENUE SOUTH
SEATTLE, WASHINGTON 98134
(206) 318-1575

THESE DRAWINGS AND PROJECT MANUAL ARE CONFIDENTIAL AND SHALL REMAIN THE SOLE PROPERTY OF STARBUCKS CORPORATION, WHICH IS THE OWNER OF THE COPYRIGHT IN THIS WORK. THEY SHALL NOT BE REPRODUCED (IN WHOLE OR IN PART), SHARED WITH THIRD PARTIES OR USED IN ANY MANNER ON OTHER PROJECTS OR EXTENSIONS TO THIS PROJECT WITHOUT THE PRIOR WRITTEN CONSENT OF STARBUCKS CORPORATION. THESE DRAWINGS AND SPECIFICATIONS ARE INTENDED TO EXPRESS DESIGN INTENT FOR A PROTOTYPICAL STARBUCKS STORE (WHICH IS SUBJECT TO CHANGE AT ANYTIME) AND DO NOT REFLECT ACTUAL SITE CONDITIONS. NEITHER PARTY SHALL HAVE ANY OBLIGATION NOR LIABILITY TO THE OTHER (EXCEPT STATED ABOVE) UNTIL A WRITTEN AGREEMENT IS FULLY EXECUTED BY BOTH PARTIES.

STARBUCKS TEMPLATE VERSION |2022.10.23

Gensler
MAIN OFFICE
M. ARTHUR GENSLER JR. & ASSOCIATES
FL QUALIFIER'S LIC. NO. AR96486
45 FREMONT ST, SUITE 1500
SAN FRANCISCO, CA 94105 USA
Tel (415) 433.3700
Fax (415) 836.4599
SATELLITE OFFICE
10 NORTH PARK PLACE
SUITE 400
MORRISTOWN, NJ 07960 USA
Tel (973) 290.8500

PROJECT NAME:
ST LUCIE WEST & SW CASHEMERE BLVD

PROJECT ADDRESS:
920 SW SAINT LUCIE BLVD,
PORT ST.LUCIE, FL 34986

STORE #: 81616
PROJECT #: 101357-001
ISSUE DATE: 06-27-2025
STORE DESIGNER: ASHLEY SUEIRAS
DESIGN MANAGER: GENSLER
ENGINEER OF RECORD: KLH ENGINEERS

Revision Schedule

Rev	Date	By	Description
1	9/4/2025		Revision 1

SHEET TITLE:
MECHANICAL SCHEDULES
SCALE: AS SHOWN

SHEET NUMBER:
M601

ABBREVIATIONS

AFF	ABOVE FINISHED FLOOR
AHJ	AUTHORITIES HAVING JURISDICTION
APPROX	APPROXIMATE
BLDG	BUILDING
CLG	CEILING
CONST	CONSTRUCTION
CW	DOMESTIC COLD WATER
CXA	COMMISSIONING AGENT
DEG	DEGREES
DN	DOWN
DTL	DETAIL
DWG(S)	DRAWING(S)
EA	EACH
EC	ELECTRICAL CONTRACTOR
ELEC	ELECTRICAL
EMER	EMERGENCY
EXIST	EXISTING
EXT	EXTERIOR
FD	FLOOR DRAIN
FS	FLOOR SINK
F&I	FURNISH & INSTALL
FOIC	FURNISHED BY OWNER, INSTALLED BY CONTRACTOR
FOIO	FURNISHED BY OWNER, INSTALLED BY OWNER
FLR	FLOOR
FT	FOOT/FEET
FCO	FLOOR CLEANOUT
GC	GENERAL CONTRACTOR
GFCI	GROUND FAULT CIRCUIT INTERRUPTER
GW	GREASE WASTE
HR	HOUR
HVAC	HEATING, VENTILATION, AND AIR CONDITIONING
HW	HOT WATER
HS	HANDSINK
HWS	HOT WATER SUPPLY
HWR	HOT WATER RETURN
LL	LANDLORD
LV	LOW VOLTAGE
MAX	MAXIMUM
MC	MECHANICAL CONTRACTOR
MDP	MAIN DISTRIBUTION PANEL
MECH	MECHANICAL
MEP	MECHANICAL, ELECTRICAL, AND PLUMBING
MFG	MANUFACTURER
MIN	MINIMUM
MS	MOP SINK
NL	NIGHTLIGHT
NTS	NOT TO SCALE
PC	PLUMBING CONTRACTOR
PS	PREP SINK
POC	POINT OF CONNECTION
REF	REFERENCE
REQ'D	REQUIRED
REV	REVISION
SHT	SHEET
SF	SQUARE FEET
SPECS	SPECIFICATION(S)
SST	STAINLESS STEEL
TEL	TELEPHONE
TEMP	TEMPORARY
TMV	TEMPERATURE MIXING VALVE
TW	TEMPERED HOT WATER
TYP	TYPICAL
UC	UNDER COUNTER
UNO	UNLESS NOTED OTHERWISE
V	VENT
W	SANITARY WASTE
WCO	WALL CLEANOUT
WH	WATER HEATER
WP	WEATHER PROOF

PLUMBING LEGEND

SYMBOL	DESCRIPTION
PLAN-VIEW LINE TYPES	
	WORK SHOWN FADED INDICATES EXISTING WORK TO REMAIN OR NEW WORK BY OTHERS AS APPLICABLE
	WORK SHOWN BOLD-DASHED INDICATES SELECTIVE DEMOLITION WORK
	WORK SHOWN BOLD-CONTINUOUS INDICATES NEW WORK
	DIRECTION OF FLOW
PIPING LINE TYPES	
PLUMBING ACCESSORIES	
	UNION
	PIPE CAP
	STRAINER
	PRESSURE GAUGE
	THERMOMETER
WCO CO	CO - CLEANOUT, FCO - FLOOR CLEANOUT, GCO - GRADE CLEANOUT, WCO - WALL CLEANOUT
FD	FLOOR DRAIN
FS	FLOOR SINK
ET	EXPANSION TANK
PIPE VALVES	
	CONTROL VALVE , SHUT-OFF VALVE
	CHECK VALVE
	BALANCING VALVE
TMV	THERMOSTATIC MIXING VALVE
	PRESSURE REGULATOR VALVE
	PRESSURE AND TEMPERATURE RELIEF VALVE
	BACKFLOW PREVENTER
	TRAP PRIMER VALVE
PLUMBING SYMBOLS	
	PIPE UP
	PIPE DOWN
	PIPE TEE DOWN
	PIPE TEE UP
	PIPE CONTINUATION
	CONNECT TO EXISTING (FIELD VERIFY EXISTING UTILITY SERVICE TYPE, PRIOR TO MAKING CONNECTION)
VTR	VENT THROUGH ROOF
PLUMBING MISCELLANEOUS	
	CIRCULATION PUMP, RETURN PUMP

VALVES

GENERAL
PLUMBING CONTRACTOR TO PROVIDE VALVES WHERE INDICATED ON PLANS AND AS NECESSARY FOR PROPER SYSTEM OPERATION AND COMPONENT ISOLATION. SEE PROJECT MANUAL FOR TYPES. INSTALL VALVES FOR EACH FIXTURE AND ITEM OF EQUIPMENT. PROVIDE BRAIDED STAINLESS STEEL HOSE (UNLESS OTHERWISE NOTED) BETWEEN VALVE AND EQUIPMENT IN ACCORDANCE WITH MANUFACTURER'S SPECIFICATIONS. LOCATE SHUT-OFF VALVES ADJACENT TO EQUIPMENT FOR EASY ACCESS SUCH THAT VALVES CAN BE REACHED WITHOUT MOVING EQUIPMENT. SHUT OFF VALVES TO BE BALL TYPE. VALVES SHALL BE LISTED/APPROVED FOR USE PER AUTHORITIES HAVING JURISDICTION (AHJ) AND CODE REQUIREMENTS. PROVIDE VALVE IDENTIFICATION PER THE PROJECT MANUAL FOR MAIN WATER SERVICE SHUT-OFF AND ANY OTHER VALVES WHICH ARE NOT CLEARLY EVIDENT WHAT THEY SERVE.

SUPPLY WATER SERVICE
IF WATER PRESSURE SUPPLIED TO STORE IS GREATER THAN 65 PSI, PROVIDE A PRESSURE REGULATOR IN MAIN SUPPLY TO REDUCE WATER PRESSURE. PROVIDE BACKFLOW PREVENTION ON WATER SERVICE IF REQUIRED BY LOCAL CODES.

THERMOSTATIC MIXING VALVE
PROVIDE POINT OF USE THERMOSTATIC MIXING VALVES (TMV) AT SINKS NOTED ON PLAN AND SET FOR 110°F(OR AS REQUIRED BY AHJ) TO SERVE HAND SINKS. MIXING VALVE TO BE INSTALLED PER MANUFACTURER'S REQUIREMENTS WITH CHECK VALVES AT SUPPLY INLETS. PROVIDE THERMOMETER ON OUTLET OF TMV. SEE THE PROJECT MANUAL FOR REQUIREMENTS.

PLUMBING FIXTURES

WATER HEATER
SIZE WATER HEATER PER STARBUCKS STANDARD AND PER AUTHORITIES HAVING JURISDICTION (AHJ), WHICHEVER IS MORE STRINGENT. PROVIDE A GLASS-LINED, ENERGY EFFICIENT, ELECTRIC (OR GAS FIRED EQUIVALENT) WATER HEATER. PROVIDE INSTALLATION COMPLETE WITH FITTINGS AS SHOWN IN THE DRAWINGS. SET HOT WATER TEMPERATURE AT 140°F OR ADJUST AS REQUIRED BY AHJ. PROVIDE THERMOMETER ON HOT WATER PIPE LEAVING WATER HEATER.

WATER FILTRATION
STARBUCKS WATER FILTRATION VENDOR WILL PROVIDE FILTRATION SYSTEM. CONTRACTOR SHALL CONFIRM WITH STARBUCKS CONSTRUCTION MANAGER WHETHER VENDOR OR PLUMBING CONTRACTOR IS TO INSTALL FILTRATION SYSTEM. PROVIDE AND COORDINATE INSTALLATION COMPLETE WITH ALL PIPING, FITTINGS, AND EQUIPMENT AS INDICATED ON THE DRAWINGS.

CONNECTIONS
THE PLUMBING CONTRACTOR SHALL MAKE ALL FINAL CONNECTIONS TO EQUIPMENT INCLUDING REQUIRED MATERIAL SUCH AS PIPING, VALVES, FILTERS, TRAPS, CHECKS VALVES, VACUUM BREAKERS, AND FLEXIBLE AND RIGID TUBING.

SCHEDULES
REFER TO SCHEDULES ON DRAWINGS FOR A DESCRIPTION OF LISTED ITEMS AND FURNISH ANY AND ALL PLUMBING FIXTURES LISTED AS "GC". ANY DISCREPANCIES ABOUT WHO IS TO PROVIDE PLUMBING FIXTURES IN THE SCHEDULE SHALL BE BROUGHT TO STARBUCKS ATTENTION FOR CLARIFICATION. INSTALL ALL FIXTURES LISTED REGARDLESS OF WHO SUPPLIES.

HAND SINK
IF FAUCET HAS A TEMPERATURE LIMIT STOP, IT IS TO BE REMOVED SO THAT TEMPERED WATER FROM THE WATER HEATER IS NOT FURTHER REDUCED. HOT WATER 100° - 110°F (34° - 43°C) MUST BE ABLE TO REACH SINK WITHIN 15 SECONDS.

UTILITY SINKS
UTILITY SINKS ARE TO DELIVER A WATER TEMPERATURE RANGE OF 110° - 120°F (43° - 49°C).

DISHWASHER
G.C. TO FURNISH AND INSTALL POWER CORD FOR DISHWASHER PER JURISDICTIONAL REQUIREMENTS. IF EQUIPMENT IS SPECIFIED AS HOBART ADVANSYS, THE UNIT IS TO BE PLUMBED WITH COLD, NON-FILTERED WATER. IF THE WATER FILTRATION SYSTEM IS A PENTAIR CONFIGURATION II OR III, THEN THE COLD, NON-FILTERED WATER MUST ALSO BE SOFTENED.

INSULATION

WATER PIPING
PROVIDE THERMAL INSULATION PER THE SPECIFICATIONS. UNLESS OTHERWISE REQUIRED BY THE LOCAL AUTHORITY OR ENERGY CODES, THE MINIMUM INSULATION LEVELS SHALL BE AS FOLLOWS:

PIPE SIZE (DIAMETER)		INSULATION THICKNESS
LESS THAN OR EQUAL TO 1 1/2" (38MM)	=	1" (24MM)
2" (51MM) OR GREATER	=	1 1/2" (38MM)

(INSULATION VALUE = K VALUE NOT EXCEEDING 0.27 BTU* INCH (H*FT2*F)

SAFETY COVERS
FURNISH AND INSTALL SPECIFIED NO SCALD SAFETY COVERS WITH INSULATED FOAM LINER AND TAMPER PROOF STRAP AT ALL EXPOSED ADA SINK P-TRAPS AND WATER SUPPLIES AND AS REQUIRED BY JURISDICTION .

PIPING

SOIL, WASTE, AND VENT PIPING
SEE THE PROJECT MANUAL FOR PIPE MATERIALS. ALL HORIZONTAL SANITARY RUNS SHALL DRAIN AT A GRADE OF 1/4" PER FOOT (21MM PER METER) WHERE POSSIBLE BUT IN NO CASE LESS THAN 1/8" PER FOOT (10MM PER METER) WHERE ALLOWED & SIZED PER AHJ AND CODE.

COORDINATE WITH LOCAL AUTHORITIES FOR DRAINAGE REQUIREMENTS FOR EQUIPMENT DESIGNATED WITH INDIRECT WASTE TO FLOOR SINKS. INDIRECT DRAIN LINES ARE TO MAINTAIN MIN. 1" (25MM) AIR GAP ABOVE FLOOR SINKS. PROVIDE PIPED DRAIN (P-TRAP AND VENT) TO SANITARY IF REQUIRED BY LOCAL JURISDICTION.

GREASE WASTE PIPING
SEE THE PROJECT MANUAL FOR PIPE MATERIALS. ALL HORIZONTAL GREASE DRAINAGE PIPING UPSTREAM OF GREASE INTERCEPTOR SHALL DRAIN NO LESS THAN 1/4" PER FOOT (2-PERCENT SLOPE), PER IPC 704.1

CONDENSATE DRAINAGE PIPING
THE PLUMBING CONTRACTOR SHALL PROVIDE CONDENSATE DRAINS FOR AIR HANDLING UNITS AND STARBUCKS EQUIPMENT (REFER TO SCHEDULE). CONDENSATE DRAINAGE PIPING SHALL BE TYPE "M" COPPER TUBING WITH WROUGHT COPPER SWEAT FITTINGS JOINED WITH 50/50 SOLDER.

HANGERS AND SUPPORTS
THE PLUMBING CONTRACTOR SHALL FURNISH AND INSTALL ALL PIPE SUPPORTS REQUIRED FOR EQUIPMENT AND MATERIAL IN ACCORDANCE WITH SPECIFICATIONS. ALL HORIZONTAL RUNS OF PIPING SHALL BE SUPPORTED BY PIPE HANGERS INSTALLED AS REQUIRED BY LOCAL CODES. ADDITIONAL SUPPORTS SHALL BE PROVIDED WHERE REQUIRED TO PREVENT SAGGING.

CONNECTIONS
INSTALL UNIONS ADJACENT TO EACH VALVE AND AT FINAL CONNECTION TO EACH PIECE OF EQUIPMENT. INSTALL DIELECTRIC COUPLINGS TO CONNECT PIPING MATERIALS OF DISSIMILAR METALS.

CLEANOUTS
PROVIDE FLOOR AND WALL CLEANOUTS AS INDICATED ON THE DRAWINGS OR WHERE REQUIRED BY CODE IN ALL SOIL, WASTE, AND DRAIN LINES. SEE THE PROJECT MANUAL FOR TYPES. CLEANOUTS SHALL BE SAME SIZE AS PIPE EXCEPT THAT CLEANOUTS LARGER THAN 4" WILL NOT BE REQUIRED.

INSTALLATION
INSTALL PIPING FREE OF SAGS AND BENDS. PROVIDE BRACKET STANDOFFS FROM MOUNTING SURFACES SUFFICIENT TO ALLOW 1" (25MM) OF CLEANING SPACE ALL AROUND PIPING, INCLUDING ANY ADDED PIPING INSULATION. INSTALL FITTINGS FOR CHANGES IN DIRECTION AND BRANCH CONNECTIONS. INSTALL SLEEVES FOR PIPES PASSING THROUGH CONCRETE AND MASONRY WALLS, GYPSUM BOARD PARTITIONS, CONCRETE FLOOR AND ROOF SLABS. SEAL PIPE PENETRATIONS THROUGH RATED CONSTRUCTION WITH FIRE STOPPING SEALANT MATERIAL PER CODE REQUIREMENTS. DO NOT INSTALL PEX PIPING IN RATED WALLS OR THROUGH RATED FLOORS. INSTALL PER MANUFACTURER'S INSTRUCTIONS AND ENSURE PROPER PROTECTION OF PEX PIPING FROM METAL EDGES. UNDERGROUND WATER AND SEWER LINES SHALL BE LAID IN SEPARATE TRENCHES WITH A MINIMUM HORIZONTAL SPACING AS REQUIRED BY CODE, EXCAVATED TO THE PROPER DEPTH AND GRADED TO PRODUCE THE REQUIRED FALL.

TESTING
ALL PIPES SHALL BE TESTED BY AN APPROVED METHOD BEFORE THEY ARE
BACKFILLED OR CONCEALED. AFTER TESTING IS COMPLETE, THE PLUMBING
CONTRACTOR SHALL DISINFECT THE POTABLE WATER SYSTEM AS REQUIRED BY LOCAL AUTHORITY. TEST WATER PURITY ACCORDING TO LOCAL REQUIREMENTS AND SUBMIT CERTIFIED TEST RESULTS TO ENGINEER FOR REVIEW AND APPROVAL.

IDENTIFICATION
PROVIDE PIPE IDENTIFICATION EVERY 10 FT (EXCEPT WHERE PIPES ARE EXPOSED TO PUBLIC) IN ACCORDANCE WITH SPECIFICATIONS.

NITROGENATION

STARBUCKS NITROGENATION VENDOR WILL PROVIDE AND INSTALL EQUIPMENT AND FITTINGS IF APPLICABLE TO PROJECT SCOPE FOR NITRO STATION. GENERAL CONTRACTOR SHALL COORDINATE NITRO SYSTEM INSTALLATION WITH STARBUCKS VENDOR.

GENERAL PLUMBING NOTES

1. PLUMBING CONTRACTOR SHALL COORDINATE WITH THE GENERAL CONTRACTOR TO PATCH AND REPAIR ALL EXISTING WALLS, FLOORS, CEILINGS OR OTHER SURFACES IDENTIFIED TO REMAIN THAT MAY BECOME DAMAGED DURING THE COURSE OF WORK.
2. EXPOSED/SURFACE MOUNTED PIPING IS ONLY ALLOWED IN THE BAR AREA UNDER COUNTERTOPS, WHERE IT DOES NOT OBSTRUCT CABINETS/DEVICES AND WHERE APPROVED BY STARBUCKS CONSTRUCTION MANAGER. IF ROUTED THROUGH CABINETS, IT SHALL BE ROUTED TO MAXIMIZE STORAGE SPACE AND BE PROTECTED FROM DAMAGE.
3. DRAWINGS ARE DIAGRAMMATIC AND INDICATE GENERAL INTENT OR ARRANGEMENT OF SYSTEM(S). FURNISH AND INSTALL ALL COMPONENTS NEEDED WHETHER INDICATED OR NOT TO PROVIDE A COMPLETE AND OPERATING SYSTEM. OVERALL CASEWORK COMPONENT DIMENSIONING ON PLUMBING DETAILS ARE SHOWN FOR REFERENCE AND COORDINATION ONLY.
4. CONTRACTOR TO VERIFY ALL DIMENSIONS, INCLUDING CLEARANCES REQUIRED BY OTHER TRADES, AND NOTIFY STARBUCKS CONSTRUCTION MANAGER OF ANY DISCREPANCIES PRIOR TO PROCEEDING WITH THE WORK. ALL DIMENSIONS ARE TO THE FACE OF THE FINISHED SURFACE UNLESS NOTED OTHERWISE. ALL DIMENSIONS TO BE TAKEN FROM ACTUAL BUILDING DIMENSIONS.
5. THE PLUMBING CONTRACTOR SHALL COORDINATE PLUMBING WORK WITH OTHER TRADES. THE ARCHITECTURAL DRAWINGS AND SPECIFICATIONS SHALL TAKE PRECEDENCE OVER ALL OTHER DRAWINGS. SEE ARCHITECTURAL DRAWINGS FOR FIXTURES IN CASEWORK AND PLUMBING DETAILS. SEE THE PROJECT MANUAL FOR PLUMBING SPECIFICATION SECTIONS.
6. ALL PIPING AND/OR PLUMBING DEVICES SHALL BE SUPPORTED FROM STRUCTURE (NOT FROM HVAC DUCTS OR OTHER PIPES/CONDUITS).
7. WHEN BUNDLING SEVERAL INDIRECT WASTE LINES TO DRAIN INTO FLOOR SINK, A UNISTRUT IS REQUIRED FOR SECURING AND BRACING ALL LINES ABOVE THE DRAIN.
8. FURNISH AND INSTALL ALL NEEDED DRAIN LINES PER CODE (NOT ALL SHOWN). INSTALL DRAINS AT 2% SLOPE WHERE POSSIBLE WITHOUT DIPS OR SAGS. ALL INDIRECT DRAINS SHALL RUN SEPARATELY FROM EACH OTHER TO INDIRECT DRAIN RECEPTOR AND SHALL TERMINATE WITH AN AIR GAP PER CODE.
9. FURNISH AND INSTALL WALL CLEANOUTS AT ALL SINKS AND AS NEEDED PER CODE (NOT ALL SHOWN).
10. INSULATE ICE BIN DRAINAGE PIPES PER THE REQUIREMENTS IN THE PROJECT MANUAL.
11. PROCURE WATER HEATERS THROUGH STARBUCKS NATIONAL ACCOUNT WITH DISTRIBUTOR NATIONAL HOT WATER. SUBMIT ORDERS BY EMAIL TO: HOTWATERNIGHTCALLS@NATIONALWHOLESALE.BIZ NATIONAL HOT WATER CONTACT FOR ORDERING AND DISTRIBUTION SUPPORT: (888) 444-4435.
12. PROCURE WATER CLOSETS, URINALS AND FLUSH VALVES THROUGH STARBUCKS NATIONAL ACCOUNT WITH DISTRIBUTOR FERGUSON. SUBMIT QUOTATION REQUESTS BY EMAIL TO: NA.PROJECTS@FERGUSON.COM FERGUSON CONTACT FOR ORDERING AND DISTRIBUTION SUPPORT; (757) 234-8342.

GENERAL NOTES

SCOPE
THE INTENT OF THE PROJECT MANUAL AND THE DRAWINGS IS TO PROVIDE A COMPLETE AND FULLY OPERATIONAL PLUMBING SYSTEM. THE CONTRACTOR SHALL FURNISH ALL LABOR, MATERIAL, AND EQUIPMENT RELATED TO THE INSTALLATION OF THE PLUMBING WORK.

SITE EXAMINATION
THE CONTRACTOR SHALL THOROUGHLY EXAMINE ALL AREAS WHERE FIXTURES, EQUIPMENT, AND PIPING WILL BE INSTALLED AND WILL REPORT ANY CONDITION THAT PREVENTS THE PROPER INSTALLATION OF THE PLUMBING WORK.

STANDARDS
EQUIPMENT AND MATERIALS SHALL CONFORM WITH THE APPROPRIATE PROVISIONS OF LISTING STANDARD IN EFFECT AS APPLICABLE TO EACH INDIVIDUAL UNIT OR ASSEMBLY.

CODES
ALL WORK SHALL BE PERFORMED IN STRICT ACCORDANCE WITH ALL APPLICABLE PROVINCIAL AND LOCAL CODES AND ORDINANCES. IN CASE OF CONFLICT BETWEEN THE DRAWINGS AND SPECIFICATIONS AND THE CODES AND ORDINANCES, THE HIGHEST STANDARD SHALL APPLY. THE CONTRACTOR SHALL SATISFY CODE REQUIREMENTS AS A MINIMUM STANDARD WITHOUT ANY EXTRA COST TO STARBUCKS.

PERMITS AND FEES
THE CONTRACTOR SHALL PROCURE AND PAY FOR ALL PERMITS, FEES, AND INSPECTIONS NECESSARY TO COMPLETE THE PLUMBING WORK.

WARRANTY
THE CONTRACTOR SHALL UNCONDITIONALLY WARRANT ALL WORK TO BE FREE OF DEFECTS IN MATERIAL AND WORKMANSHIP FOR A PERIOD OF ONE (1) YEAR FROM THE DATE OF FINAL ACCEPTANCE BY STARBUCKS AND WILL REPAIR OR REPLACE ANY DEFECTIVE WORK PROMPTLY AND WITHOUT CHARGE AND RESTORE ANY OTHER EXISTING WORK DAMAGED IN THE COURSE OF REPAIRING DEFECTIVE MATERIALS AND WORKMANSHIP.

LANDLORD REQUIREMENTS

PRIOR TO BID: THE CONTRACTOR SHALL COORDINATE WITH LANDLORD / BUILDING OWNER FOR ANY CONSTRUCTION REQUIREMENTS. CONTRACTOR SHALL BECOME COMPLETELY FAMILIAR WITH REQUIREMENTS AND ADHERE TO THEM. WHERE LANDLORD / BUILDING OWNER REQUIREMENTS ARE MORE STRINGENT THAN SHOWN IN THESE PLANS. LANDLORD / BUILDING OWNER REQUIREMENTS SHALL GOVERN.

KLH ENGINEERS
MECHANICAL/ELECTRICAL ENGINEERS
WWW.KLHENGRS.COM
KOHRS LONNEMANN HEIL ENGINEERS, INC.
444 SOUTH FRONT STREET
COLUMBUS, OHIO 43215
800-354-9783 614-228-2180
614-228-2183 FAX
FORT THOMAS, KENTUCKY
LEXINGTON, KENTUCKY
LOUISVILLE, KENTUCKY
NEW YORK, NEW YORK

PERMIT SET - FOR CONSTRUCTION

© 2022 STARBUCKS COFFEE COMPANY

STARBUCKS COFFEE COMPANY
2401 UTAH AVENUE SOUTH
SEATTLE, WASHINGTON 98134
(206) 318-1575

THESE DRAWINGS AND PROJECT MANUAL ARE CONFIDENTIAL AND SHALL REMAIN THE SOLE PROPERTY OF STARBUCKS CORPORATION, WHICH IS THE OWNER OF THE COPYRIGHT IN THIS WORK. THEY SHALL NOT BE REPRODUCED (IN WHOLE OR IN PART), SHARED WITH THIRD PARTIES OR USED IN ANY MANNER ON OTHER PROJECTS OR EXTENSIONS TO THIS PROJECT WITHOUT THE PRIOR WRITTEN CONSENT OF STARBUCKS CORPORATION. THESE DRAWINGS AND SPECIFICATIONS ARE INTENDED TO EXPRESS DESIGN INTENT FOR A PROTOTYPICAL STARBUCKS STORE (WHICH IS SUBJECT TO CHANGE AT ANYTIME) AND DO NOT REFLECT ACTUAL SITE CONDITIONS. NEITHER PARTY SHALL HAVE ANY OBLIGATION NOR LIABILITY TO THE OTHER (EXCEPT STATED ABOVE) UNTIL A WRITTEN AGREEMENT IS FULLY EXECUTED BY BOTH PARTIES.

STARBUCKS TEMPLATE VERSION i2022.10.23

Gensler
MAIN OFFICE
M. ARTHUR GENSLER JR. & ASSOCIATES
FL QUALIFIER'S LIC. NO. AR96486
45 FREMONT ST., SUITE 1500
SAN FRANCISCO, CA 94105 USA
Tel (415) 433.3700
Fax (415) 836.4599
SATELLITE OFFICE
10 NORTH PARK PLACE
SUITE 400
MORRISTOWN, NJ 07960 USA
Tel (973) 290.8500

PROJECT NAME:
ST LUCIE WEST & SW
CASHEMERE BLVD

PROJECT ADDRESS:
920 SW SAINT LUCIE BLVD,
PORT ST.LUCIE, FL 34986

STORE #:	81616
PROJECT #:	101357-001
ISSUE DATE:	06-27-2025
STORE DESIGNER:	ASHLEY SUEIRAS
DESIGN MANAGER:	GENSLER
ENGINEER OF RECORD:	KLH ENGINEERS

Revision Schedule

Rev	Date	By	Description

SHEET TITLE:
PLUMBING NOTES

SCALE: AS SHOWN

SHEET NUMBER:
P001

PLUMBING CALCULATIONS

GREASE INTERCEPTOR CALCULATIONS

Quote: D4AF3644

Reference No. 89558 Project Name: 27472.00 - Starbucks - Port Street, St. Lucie, FL

Step 1: Flow rate to grease interceptor

Fixture flow rate: (cu in / 231) = gal x 0.75 / 2 min = 2 min flow rate

NAME	TYPE	DIMENSIONS	QTY	CU IN	FLOW RATE
3 Compartment Sink	3 Compartment Sink	16" x 19" x 14" (3)	1	12,768	20.73 GPM
Bar Sink One Bowl	Bar Sink One Bowl	26" x 9" x 12"	2	5,616	9.12 GPM
Bar Sink One Bowl	Bar Sink One Bowl	12" x 20" x 14"	1	3,360	5.45 GPM
Dishwasher	Dishwasher (Undercounter)	5 gal.	1	1,155	2.5 GPM
Dump Sink One Bowl	Dump Sink One Bowl	27" x 26" x 14"	1	9,828	15.95 GPM
Floor Drain	Floor Drain	N/A	1	N/A	0 GPM
Hand Sink	Hand Sink	10" x 14" x 5"	1	700	1.14 GPM
Hand Sink	Hand Sink	10" x 6" x 5"	2	600	0.98 GPM
Mop Basin	Mop Basin	24" x 24" x 10"	1	5,760	9.35 GPM
Total					**65.21 GPM**

Step 2: Grease Production

Servings per day x Grease production value x Days between pump-outs = Grease output

Servings per day: 1000
Grease production value: 0.005 lbs per serving (Coffee Shop: Low / No flatware)
Days between pump-outs: 90 days

1000 x 0.005 x 90 = 450 lbs of FOG

SCHIER MODEL	
GB-75	**Description:** GREASE INTERCEPTOR 75 GPM, 4" PLAIN/FPT CONNECTIONS **Dimensions:** Length: 47", Width: 33", Height: 39.75" **Flow Rate/Grease Capacity:** 75 GPM / 861 lbs **Liquid Capacity:** 125 gal

PROJECT INPUTS	
Local Plumbing Code	IPC
Waste System Type	Grease Waste
Total Building DFUs	56
Minimum Building Slope Required	1/4"
Minimum Building Drain Size	4"

PROJECT INPUTS	
Local Plumbing Code	IPC
Waste System Type	Sanitary
Total Building DFUs	12
Minimum Building Slope Required	1/8"
Minimum Building Drain Size	4"

Electric Water Heater

Hot Water Demand Calculations

CW Temp (°F)	40
HW Temp (°F)	120
Total Maximum Demand (GPH)	118
Total Adjusted Demand (GPH)	47
Net Storage Required (GAL)	47
Actual Storage Provided (GAL)	50
First Hour Capacity (GPH)	119
Second and Third Hour Capacity (GPH)	69
Total kW Calculated	10.2
Total kW Provided	15.0

Based on ASHRAE 2011 HVAC Applications, Ch 50.

Design Results from Worksheet		
Code Chosen	IPC	
WSFU	51.0	
Addition Non-WSFU Load	0	gpm
Flushing Recommended	Flush Valve	
Flow Test Information		
Assumed or Known Pressure?	Assumed	
Static Pressure	70	psi
Residual Pressure	65	psi
Measured Flow	1000	gpm
Building Flow - gpm	50.4	gpm
Adjusted Pressure - psi	69.7	psi
Analysis Inputs		
Predominant Flushing	Flush Valve	
Pipe Friction	Smooth	
Residual Pressure at Control fixture	35	psi
Piping Length Inputs		
Street to Meter	50	feet
Meter to BFP	1	feet
BFP to Bottom of Riser	1	feet
Elevation	5	feet
Top of Riser to Control Fixture	70	feet
Fitting Multiplier	1.25	
Pressure Loss Inputs		
Design pressure loss	3	psi/100'
Losses thru Meter	- 2	psi
Losses thru BFP	- 10	psi
Misc. Losses	- 15	psi
Domestic Water Service		
Building Peak Flow	50.4 gpm	
Domestic Water Service Size	2 Inches	

System Pressure Analysis		
Total Piping Pressure Loss	4.8	psi
Pressure Losses Thru Meter	2.0	psi
Pressure Losses Thru BFP	10.0	psi
Pressure Losses Thru Misc.	15.0	psi
Elevation Pressure Loss	2.2	psi
Static Pressure Outlet of BFP	60.0	psi
Residual Pressure Outlet of BFP	56.4	psi
Static Mechanical Room Pressure	60.0	psi
Residual Mechanical Room Pressure	56.4	psi
Design Pressure at Control fixture	35.0	psi
Static Pressure Available	57.8	psi
Residual Pressure Available	35.8	psi

Pipe Sizing Table

Pipe Size (in)	CWSFU	HWSFU
3/4"	1	2
1"	3	5
1-1/4"	7	16
1-1/2"	13	40
2"	70	N/A

Sized based on recommended pressure losses and velocities stated in the IPC

SYSTEM COMMISSIONING

CONTRACTOR RESPONSIBILITIES FOR BUILDING COMMISSIONING

CONTRACTOR SHALL PROVIDE SUPPORT AND WORK AS SPECIFIED, NEEDED AND REQUIRED TO CONDUCT AND FACILITATE STARBUCKS STAFF BUILDING COMMISSIONING EFFORTS. THIS WORK WILL BE COMPRISED OF THREE DISTINCT EFFORTS:

1. SUPPORT STARBUCKS COMMISSIONING AGENT (CXA) DURING INSTALLATION VERIFICATION AND CORRECT DISCLOSED DEFICIENCIES;

2. PERFORM TESTING, ADJUSTING, LINE FLUSHING AND SYSTEM STARTUP AND SUPPORT FUNCTIONAL PERFORMANCE TESTING BY STARBUCKS CXA;

3. CORRECT DEFICIENCIES DISCLOSED BY FUNCTIONAL PERFORMANCE TESTING AND SUBMIT REPORTS. CONTRACTOR SHALL PERFORM AND PROVIDE THE FOLLOWING:

   A. SYSTEMS SUBJECT TO COMMISSIONING MAY INCLUDE, BUT ARE NOT LIMITED TO, DOMESTIC HOT WATER GENERATION.

   B. CONTRACTOR SHALL INCLUDE COMMISSIONING ACTIVITIES IN PROJECT SCHEDULE AND SHOW INTERVALS FOR PERFORMANCE OF WORK FOR WHICH CONTRACTOR IS RESPONSIBLE AND INTERVALS FOR WORK PERFORMED BY STARBUCKS CXA. CONTRACTOR SHALL SHOW RESOURCES FOR PERFORMING ALL WORK RELATED TO COMMISSIONING ACTIVITIES ON A LINE ITEM IN THE SCHEDULE OF VALUES.

   C. CONTRACTOR SHALL INSTALL EQUIPMENT IN ACCORDANCE WITH THE MANUFACTURER'S REQUIREMENTS AND ALL CONTRACT DOCUMENTS. ENSURE THAT ALL EQUIPMENT IS INSTALLED TOTALLY COMPLETE, AND ACCESSIBLE TO STARBUCKS CXA FOR INSTALLATION VERIFICATION AND FUNCTIONAL PERFORMANCE TESTING PRIOR TO THE SCHEDULED START OF INSTALLATION VERIFICATION.

   D. INSTALLATION VERIFICATION SHALL BE PERFORMED BY STARBUCKS CXA. CONTRACTOR SHALL SUPPORT STARBUCKS CXA INSTALLATION VERIFICATION EFFORTS AS NECESSARY. PROVIDE ALL ACCESS AND EQUIPMENT NECESSARY FOR STARBUCKS STAFF TO VERIFY THAT THE EQUIPMENT IS INSTALLED CORRECTLY.

   E. CONTRACTOR SHALL BE READILY AVAILABLE DURING INSTALLATION VERIFICATION TO CORRECT ANY DEFICIENCIES OR DEFECTS DISCLOSED BY THE INSTALLATION VERIFICATION PROCESS. CORRECTIONS SHALL BE MADE IN A TIMELY MANNER WITHOUT DISRUPTION OF THE CONSTRUCTION SCHEDULE.

   F. ALL DOMESTIC WATER HEATING, RECIRCULATING, FILTER AND SOFTENING EQUIPMENT SHALL BE TESTED AND/OR ADJUSTED AND BALANCED BY THE CONTRACTOR'S TESTING, ADJUSTING AND BALANCE AGENT (SEE TESTING ADJUSTING AND BALANCING) OR THE MANUFACTURER'S CERTIFIED STARTUP REPRESENTATIVE AFTER THE SYSTEM IS VERIFIED TO BE COMPLETE AND CORRECT BY STARBUCKS CXA IN ACCORDANCE WITH THE REQUIREMENTS OF THESE DOCUMENTS. DELIVERABLES: PRELIMINARY, WRITTEN FUNCTIONAL PERFORMANCE REPORT CONFORMING TO THE REQUIREMENTS SPECIFIED HEREIN, DOCUMENTING THE INFORMATION SPECIFIED, ETC. TO THE STARBUCKS CXA IMMEDIATELY UPON COMPLETION OF THE WORK.

   G. CONTRACTOR SHALL INFORM STARBUCKS CXA WHEN EQUIPMENT IS READY FOR FUNCTIONAL PERFORMANCE TESTING. ALL EQUIPMENT SHALL BE READY FOR FUNCTIONAL PERFORMANCE TESTING PRIOR TO STARTING TESTING. CONTRACTOR SHALL OPERATE EQUIPMENT FOR STARBUCKS CXA AND VERIFY BY DEMONSTRATION THE CORRECT OPERATION OF EQUIPMENT, RESPONSE OF SENSORS, OR OTHER SUPPORT AS NEEDED FOR THE STARBUCKS CXA TO EFFICIENTLY WITNESS AND DOCUMENT ALL EQUIPMENT TESTING. STARBUCKS CXA WILL RECORD THE EQUIPMENT OPERATION AND RESPONSE TO TESTING SEQUENCES AND PREPARE A LIST OF ANY DEFICIENCIES DISCLOSED BY THE FUNCTIONAL PERFORMANCE TESTS FOR CORRECTION BY THE CONTRACTOR. DELIVERABLES: PROVIDE COMPLETED COPIES OF ALL START UP REPORTS, FILLED OUT ON THE MANUFACTURER'S FORMS, TO THE STARBUCKS CXA.

   H. CONTRACTOR IS RESPONSIBLE FOR CORRECTING ANY ISSUES OR DEFICIENCIES DISCLOSED DURING THE FUNCTIONAL PERFORMANCE TESTING PROCESS. CORRECTIONS SHOULD BE MADE IN A TIMELY MANNER WITHOUT DISRUPTION TO THE SYSTEM AND CONSTRUCTION SCHEDULE.

   I. ICONTRACTOR SHALL BE READILY AVAILABLE FOR ANY RE-TESTING OF EQUIPMENT DEEMED NECESSARY BY STARBUCKS CXA DURING INSTALLATION VERIFICATION AND FUNCTIONAL PERFORMANCE TESTING. CONTRACTOR IS RESPONSIBLE FOR CORRECTING ANY ISSUES OR DEFICIENCIES FOUND IN THE SYSTEM DURING ANY AND ALL RE-TESTING. CORRECTIONS SHOULD BE MADE IN A TIMELY MANNER WITHOUT DISRUPTION TO THE SYSTEM AND CONSTRUCTION SCHEDULE. DELIVERABLES: DEFICIENCIES LIST NOTING CORRECTIVE ACTIONS PERFORMED BY CONTRACTOR IN RESPONSE TO INSTALLATION VERIFICATION AND FUNCTIONAL PERFORMANCE TEST RESULTS.

   J. CONSTRUCTION AND POST CONSTRUCTION TESTING: ADDITIONAL TESTING MAY BE REQUIRED BY LEED AND OTHER PROCESSES THAT MAY OCCUR OUT OF SEQUENCE WITH COMMISSIONING SERVICE. CONTRACTOR SHALL CONDUCT, DOCUMENT, SUPPORT AND SCHEDULE THIS TESTING AS DIRECTED BY STARBUCKS CXA.

KLH ENGINEERS
MECHANICAL/ELECTRICAL ENGINEERS
WWW.KLHENGRS.COM
KOHRS LONNEMANN HEIL ENGINEERS, INC.
444 SOUTH FRONT STREET
COLUMBUS, OHIO 43215
800-354-9783 614-228-2180
614-228-2183 FAX
FORT THOMAS, KENTUCKY
LEXINGTON, KENTUCKY
LOUISVILLE, KENTUCKY
NEW YORK, NEW YORK

PERMIT SET - FOR CONSTRUCTION

© 2022 STARBUCKS COFFEE COMPANY

STARBUCKS COFFEE COMPANY
2401 UTAH AVENUE SOUTH
SEATTLE, WASHINGTON 98134
(206) 318-1575

THESE DRAWINGS AND PROJECT MANUAL ARE CONFIDENTIAL AND SHALL REMAIN THE SOLE PROPERTY OF STARBUCKS CORPORATION, WHICH IS THE OWNER OF THE COPYRIGHT IN THIS WORK. THEY SHALL NOT BE REPRODUCED (IN WHOLE OR IN PART), SHARED WITH THIRD PARTIES OR USED IN ANY MANNER ON OTHER PROJECTS OR EXTENSIONS TO THIS PROJECT WITHOUT THE PRIOR WRITTEN CONSENT OF STARBUCKS CORPORATION. THESE DRAWINGS AND SPECIFICATIONS ARE INTENDED TO EXPRESS DESIGN INTENT FOR A PROTOTYPICAL STARBUCKS STORE (WHICH IS SUBJECT TO CHANGE AT ANYTIME) AND DO NOT REFLECT ACTUAL SITE CONDITIONS. NEITHER PARTY SHALL HAVE ANY OBLIGATION NOR LIABILITY TO THE OTHER (EXCEPT STATED ABOVE) UNTIL A WRITTEN AGREEMENT IS FULLY EXECUTED BY BOTH PARTIES.

STARBUCKS TEMPLATE VERSION i2022.10.23

Gensler
MAIN OFFICE
M. ARTHUR GENSLER JR. & ASSOCIATES
FL QUALIFIER'S LIC. NO. AR96486
45 FREMONT ST, SUITE 1500
SAN FRANCISCO, CA 94105 USA
Tel (415) 433.3700
Fax (415) 836.4599
SATELLITE OFFICE
10 NORTH PARK PLACE
SUITE 400
MORRISTOWN, NJ 07960 USA
Tel (973) 290.8500

PROJECT NAME:
ST LUCIE WEST & SW CASHEMERE BLVD

PROJECT ADDRESS:
920 SW SAINT LUCIE BLVD,
PORT ST.LUCIE, FL 34986

STORE #: 81616
PROJECT #: 101357-001
ISSUE DATE: 06-27-2025
STORE DESIGNER: ASHLEY SUEIRAS
DESIGN MANAGER: GENSLER
ENGINEER OF RECORD: KLH ENGINEERS

Revision Schedule

Rev	Date	By	Description
1	9/4/25		Revision 1
2	9/17/25		Revision 2

SHEET TITLE:
PLUMBING NOTES

SCALE: AS SHOWN

SHEET NUMBER:
P002

SECTION 22 05 00.00 - COMMON WORK RESULTS FOR PLUMBING
GENERAL
The General Provisions of the Contract including the General and Supplemental Conditions and General Requirements apply to the work in this section. Before submitting a bid, examine documents of all other trades, visit the site and get acquainted with all conditions that may in any way affect the execution of this contract. Contractor shall obtain and pay for all permits, certificates of inspection and approvals required.
Submittal of a bid indicates that the contractor has examined the drawings, specifications, and had an opportunity to visit the site to be able to provide a comprehensive complete bid to include providing all materials, labor, tools, and equipment required to provide complete plumbing systems as outlined in Division-22.
Clearly state all full load amps (FLA), voltages and model numbers on all submittals.
Include rated capacities, operating characteristics, electrical characteristics, and furnished specialties and accessories. Provide wiring diagrams: For power, signal, and control wiring.
APPLICABLE STANDARDS
The installation of all plumbing work shall conform to all the following, but not limited, applicable local and municipal utility standards, rules and regulations, plumbing codes and statutes having jurisdiction.
All plumbing fixtures, equipment, accessories, and appurtenances shall be NSF/ANSI 61-372 compliant.
International Building Code;
International Plumbing Code;
American Society for Test Materials (ASTM);
National Sanitation Foundation (NSF);
American Standards Association (ASA);
Underwriters Laboratories (UL);
National Fire Protection Association (NFPA);
National Electric Code (NEC);
PLANS AND SPECIFICATIONS
Obtain the latest **Starbucks** design and construction standards document(s). Comply with all owner-specific requirements in addition to requirements set forth in these specifications and accompanying drawings. Should there be a conflict, the owner's standards shall take precedence, unless prevailing codes and regulations mandate otherwise.
The drawings that accompany these specifications are diagrammatic. Wherever possible make use of submittal data and verify all dimensions on site. Provide additional fittings as required by site conditions and codes at no additional cost to conform to the structure, avoid obstructions, provide required service clearances and preserve headroom. Do not scale from drawings, all measurements should be taken in the field.
EXISTING CONDITIONS
Where new plumbing systems are required to be connected to existing plumbing systems, provide all camera scoping and dye testing necessary to verify the exact location, size, invert elevation, pressure, pipe integrity, and system type to ensure a proper connection is executed. The contractor shall notify the engineer immediately if it is found a proper connection cannot be executed.
CUTTING, PATCHING AND DEMOLITION
The contractor shall be responsible for damages to the grounds, walks, road, building, piping systems, electrical systems, and their equipment and contents, caused by leaks in the piping systems being installed or having been installed by him. The contractor shall repair at his expense all damaged so caused. All repair work shall be done as directed by and in such manner as satisfactory to the architect.
Owner reserves the right to make emergency repairs as required to keep equipment in operation without voiding the contractor's guarantee bond nor relieving the contractor of his responsibilities during the bonding period.
Cut and drill all openings in roofs, walls, and floors required for the installation. Neatly patch all openings cut.
Hold cutting and patching to a minimum by arranging with other contractors for all sleeves and openings before construction is started. When drilling/cutting concrete slabs, utilize ground penetrating radar (GPR) and/or X-ray scanning equipment to verify the location is free from obstructions, including but not limited to: structural rebar/strands/tendons, electrical conduit/wiring, and/or piping/ductwork.
EXCAVATION AND BACKFILL
Perform all excavation and backfilling required for this work. Contractor shall consult with utility company prior to beginning excavation. At a minimum, all piping shall be laid on a bed of sand, 6" deep, well tamped into place and properly graded to permit the pipe to have an even bearing throughout its entire length. Sand shall be installed around the piping in 6" lifts to a point 6" above the piping.
INTERRUPTION OF EXISTING SERVICES
Interruption of Existing Plumbing Services: Do not interrupt service to facilities occupied by Owner or others unless permitted under the following conditions and then only after arranging to provide temporary service according to requirements indicated:
Notify, Architect, Construction Manager, and Owner no fewer than seven days in advance of proposed interruption of service.
Do not proceed with interruption of service without Architect's written permission.
DELEGATED DESIGN
For equipment supports, this contractor shall retain a qualified professional engineer to provide support calculations of static and dynamic loading due to operating equipment weight. The signed and sealed calculations and details shall be submitted by the retained professional engineer.
WARRANTY
This contractor shall warrant that all work under this section shall be free of defective work, materials and parts for a period of one year after acceptance of the work and shall repair, revise, and replace, at no cost to the owner, any such defects occurring within the warranty period.
Use of Electronic Drawings from the Owner's Design Team
If expressly permitted by the Owner and the terms of the Contract, editable electronic drawings may be made available for the creation of shop and as-built drawings upon request. Drawings will be made available at the discretion of the Engineer. "Request Drawings" form can be accessed, filled out and submitted at http://www.klhengrs.com (right hand side of page - Contractor Resources). Direct access to this form can be found here: http://files.klhengrs.com/requestdrawings.html

22 05 03.00 - SUBMITTALS FOR PLUMBING
Provide submittals in accordance with the Contract Documents. In addition to Division 01, the Contractor is advised to review and comply with the requirements articulated within each Division and within each section of that Division.
Some Divisions may include a division-specific "Submittal Requirements for ...." section. Where this section exists, it articulates additional requirements for submittals that apply to the work of that Division.
The following requirements help to identify, track and keep the project organized for all parties involved. They are necessary to ensure a timely turnaround and an appropriate technical review. Submittals that do not conform to the administrative requirements are rejected and returned, without technical review.
Supply submittals for each section: Submittals shall be supplied on a section-by-section and type-by-type basis. For example, independent product data submittals shall be furnished for each section that requires product data submittals. Independent shop drawing submittals shall be furnished for each section that requires shop drawings. Separate PDF file packages shall be supplied for each section, for each submittal type. Each PDF shall represent a single standalone submittal.
Include a transmittal: Transmittals shall enumerate each submittal for each section of each type and iteration. Include cover sheet / title page: The cover sheet shall include the information identified in the contract documents. It shall be included as the first page of each electronic and/or hardcopy document-based submittal. An editable and printable PDF form created with editable fields and specification compliant appearance is available from KLH upon request. It is also downloadable from the KLH website at www.klhengrs.com.
Include an index: The index shall enumerate the contents of the submittal.
Include checklists: Where checklists are included with the specifications, complete and include them within the appropriate submittal. Supply complete submittals: Complete submittals of each type are required. Partial submittals will be rejected. Where a section requires a product data submittal, all product data for that section shall be supplied together, at one time, as one complete submittal. When resubmittal is required (e.g. Revise and Resubmit) the revised submittal shall be more complete, more accurate and more contract-compliant than its rejected predecessor. The submittal number (for each section and type) shall increment for each subsequent submittal (00 – Original submission, 01 – First Resubmission, 02 – Second Resubmission, etc…). Resubmittals shall include a copy of the reviewers comments supplied with the prior submittal rejection and shall be amended with a description of the specific action taken to comply with the reviewer's comments. The absence of this on resubmittal is cause for rejection.
Name electronic files to match the submittal ID and cover sheet: The electronic file name of submittals shall match the submittal ID included on the submittals cover page. For example: The original/first product data submittal for Section 220523 would be labeled as "220523.00-PD-00"; the first resubmittal of same shall be labeled "220523.00-PD-01". The original/first shop drawings submittal file for the same section would be labeled "220523.00-SD-00"; the first resubmittal of same shall be labeled "220523.00-SD-01".
If expressly permitted by the Owner and the terms of the Contract, editable electronic drawings may be made available for the creation of shop and as-built drawings upon request. Drawings will be made available at the discretion of the Engineer.
"Request Drawings" form can be accessed, filled out and submitted at http://www.klhengrs.com (right hand side of page - Contractor Resources). Direct access to this form can be found here:
http://files.klhengrs.com/requestdrawings.html

22 05 17.00 – SLEEVES AND SLEEVE SEALS FOR PLUMBING PIPING

SLEEVES
Steel Pipe: ASTM A 53, Type E, Grade B, Schedule 40, galvanized, plain ends.

EXECUTION
Install steel pipe sleeves two sizes larger than pipes passing through floors, rated walls, building foundation walls or masonry construction. Sleeves are not required for core drilled holes.

For sleeves that will have sleeve-seal systems installed, select sleeves of size large enough to provide 1-inch annular clear space between piping and concrete slabs and walls.

Install sleeves in concrete floors, concrete roof slabs, and concrete walls as new slabs and walls are constructed. Permanent sleeves are not required for holes in slabs formed by molded-PE or -PP sleeves.
Cut sleeves to length for mounting flush with both surfaces.
Exception: Extend sleeves installed in floors of mechanical equipment areas or other wet areas 2 inches above finished floor level.
Using grout, seal the space outside of sleeves in slabs and walls without sleeve-seal system.

Install sleeves for pipes passing through interior partitions.
Cut sleeves to length for mounting flush with both surfaces.
Install sleeves that are large enough to provide 1/4-inch annular clear space between sleeve and pipe or pipe insulation.
Seal annular space between sleeve and piping or piping insulation; use joint sealants appropriate for size, depth, and location of joint.

Seal sleeves and piping with material rating equivalent to the wall rating. Maintain indicated fire rating of walls, partitions, ceilings, and floors at pipe penetrations. Seal pipe penetrations with firestop materials where required.
MECHANICAL SLEEVE-SEAL SYSTEMS
Description: Modular sealing-element unit, designed for field assembly, for filling annular space between piping and sleeve.
Sealing Elements: EPDM-rubber interlocking links shaped to fit surface of pipe. Include type and number required for pipe material and size of pipe.

22 05 23.00 - GENERAL DUTY VALVES
Submittal Requirements
Product Data: For each type of product indicated.
GENERAL
Provide stops or isolation valves on domestic water supplies to isolate hot and cold water to each fixture, including all equipment and equipment provided by others. Access shall be provided to all valves. Provide fire-rated access panel(s) to maintain full access to concealed valves.
Ball valves - 2 inch and smaller: Lead-Free, 600 psi CWP, 100 psi at 300ºF, cast bronze body, blowout-proof stem.
Butterfly Valves - 3" and up: Ductile Iron Butterfly Valve, 200 WOG, Lug Body, Lever Operator.
Approved Manufacturers: Milwaukee Valve, NIBCO, and Watts Water Technologies Co.
Valves to conform to: MSS-SP-110 Type I/ MSS-SP-67 Type I, NSF/ANSI -61/372.
Check valves - to be same size as system piping it accompanies. Lead-free, bronze body, 250 WOG, non-shock, spring check valve. Conforms to the following standard(s): MSS-SP-80 I, NSF/ANSI -61/372

22 05 29.00 – HANGERS AND SUPPORTS FOR PLUMBING PIPING AND EQUIPMENT
GENERAL
Provide hangers, supports, clamps, attachments, and structural steel members where required to support piping and equipment from building structure.
Support of piping from the decking or equipment is prohibited.
Arrange for grouping of parallel runs of horizontal piping supported together on field-fabricated, heavy-duty trapeze hangers where possible. Trapeze hangers shall conform to: MSS SP-69, Type 59.
Hangers shall be sized to allow insulation to pass through unobstructed.
Hangers and supports shall be placed at all changes in direction, valves and equipment.
The maximum horizontal spacing of cast-iron pipe hangers can be 10' where 10-foot lengths of pipe are installed.
Piping shall also be supported at each change in direction, valves and equipment.
Clevis-type hangers shall and supports shall conform to: MSS SP-58, Type 1-58.

22 05 53.00 - IDENTIFICATION FOR PLUMBING PIPING AND EQUIPMENT
PIPING
Provide self-adhesive pipe labels with white background and black lettering, contact type with permanent adhesive backing. Include identification of piping service using same designations or abbreviations as used on the drawings and an arrow indicating flow direction.
EQUIPMENT
Provide self-adhesive plastic equipment labels with white background and black lettering, contact type with permanent adhesive backing, 160 degree F temperature. Include equipment's drawing designation and specification section number where equipment is specified.

22 07 19.00 – PLUMBING SYSTEM INSULATION
GENERAL
Insulation shall be listed and labeled per ASTM E 84 for plenum installations employing slip on techniques.
Provide insulation materials, accessories, and finishes with smooth, straight, and even surfaces; free of voids throughout the length of piping including fittings, valves, and specialties.
Surface Preparation: Clean and dry surfaces to receive insulation. Remove materials that will adversely affect insulation application.
PIPING SYSTEMS REQUIRING INSULATION
Insulate domestic cold water piping, associated fittings and valves with flexible elastomeric 1/2" wall thickness insulation.
Insulate domestic hot water piping, associated fittings and valves with 1" thick flexible elastomeric, 1-1/2" thick fiberglass insulation or per local energy code, whichever greater.
Insulate domestic hot water return piping, associated fittings and valves with 1" wall thickness insulation or per local energy code, whichever greater.
Insulate waste piping above ceilings that receive condensate with 1/2" wall thickness insulation.
Insulate exposed sanitary drains, domestic water, domestic hot water, and stops for plumbing fixtures for people with disabilities.
FLEXIBLE ELASTOMERIC INSULATION
Closed-cell, sponge- or expanded-rubber materials.
Comply with ASTM C 534, Type I for tubular materials and Type II for sheet materials.
Adhesives, Sealers, and Protective Finishes: As recommended by insulation manufacturer for applications indicated.
Manufacturers: Subject to compliance with requirements, available products that may be incorporated into the work include, and are limited to, the following:
Aeroflex USA, Inc.; Aerocel., Armacell LLC; AP Armaflex.,K-Flex USA;
FIBERGLASS INSULATION
Fiberglass piping insulation: ASTM C 547, Class 1
Encase pipe fittings insulation with one-piece pre-molded PVC fitting covers.
Vapor Barrier Material: Paper-backed aluminum foil, except as otherwise indicated, strength and permeability rating equivalent to adjoining pipe insulation jacketing.
Staples, Bands, Wires, and Cement: As recommended by insulation manufacturer for applications indicated.
Adhesives, Sealers, and Protective Finishes: As recommended by insulation manufacturer for applications indicated.
Manufacturers: Subject to compliance with requirements, available products that may be incorporated into the work include, and are limited to, the following:
Armstrong World Industries, Inc., Owens-Corning Fiberglass Corp., Johns Manville.
ADHESIVES
Materials shall be compatible with insulation materials, jackets, and substrates and for bonding insulation to itself and to surfaces to be insulated, unless otherwise indicated.
Insulation for handicap accessible fixtures
All handicap lavatory p-trap and angle stop assemblies shall be insulated with trap wrap protective kit manufactured by Profio model PF202WH or equal.
Abrasion resistant, anti-microbial vinyl exterior cover shall be smooth. For traps, the insulation shall have a cleanout nut cap to allow service to the trap without disassembly.
For stops, the insulation shall have a lock lid that prevents tampering but allows access without removal of the insulation. Fasteners shall remain substantially out of sight.
Manufacturers: subject to compliance with requirements: Profio, Truebro, Plumberex

22 11 16.00 – DOMESTIC WATER PIPING
Submittal Requirements
Product Data: For each type of product indicated.
GENERAL
Install piping concealed from view unless noted otherwise, free of sags and bends. Do not enclose, cover, or put piping into operation until it has been inspected and approved by authorities having jurisdiction. Clean and disinfect potable domestic water piping using approved procedures by authorities having jurisdiction.
Install at right angles; diagonal runs are prohibited unless otherwise shown. Install piping above accessible ceilings to allow sufficient space for ceiling panel removal.
Coordinate all piping with all other trades.
Provide water pressure regulators where necessary to limit the incoming water pressure to 80 psi inside the building.
DOMESTIC WATER PIPING ABOVE GROUND:
Hard copper tube, ASTM B 88, Type L; wrought-copper, solder-joint fittings; and soldered joints.
Solder Filler Metals: ASTM B 32, lead-free alloys.
Flux: ASTM B 813, water flushable.
PEX is approved for interior water piping. Type "L"; copper pressure-seal joint; and pressure-seal joint systems.
CATHODIC PROTECTION
Provide dielectric insulation at points where copper or brass pipe comes in contact with ferrous piping, reinforcing steel or other dissimilar metal in structure.

22 11 19.00 – DOMESTIC WATER PIPING SPECIALTIES
Submittal Requirements
Product Data: For each type of product indicated.
Manufacturers: Subject to compliance with requirements, available products that may be incorporated into the work include, and are limited to, the following:
Conbraco Industries, Inc., Watts Water Technologies Co., Zurn Industries, LLC., Thermomegatech, Acorn Engineering Co., and Caleffi, N. America., MIFAB, Inc., Precision Plumbing Products, Inc., Sioux Chief Manufacturing Company, Inc., Jay R. Smith Mfg. Co., Provent Systems, Rector Seal.
REDUCED PRESSURE BACKFLOW PREVENTERS
Backflow preventer (2" and smaller) - Provide a reduced pressure backflow preventer on water service main where the water service enters the building. Reduced pressure backflow preventer shall be sized equal to the size of the water service and conform to ASSE 1013. Pipe backflow preventer discharge to approved place of disposal.
DOUBLE CHECK VALVE ASSEMBLY BACKFLOW PREVENTERS
Backflow preventer (2" and smaller) – Provide a double check valve assembly backflow preventer on tenant water service downstream of main building reduced pressure zone backflow preventer. Double check valve assembly backflow preventer shall be sized equal to the size of the tenant water service and conform to ASSE 1015.
DUAL CHECK VALVE BACKFLOW PREVENTER
Provide a dual check valve backflow preventer that complies with ASSE 1022 at connection of domestic water supply to any permanently connected potable water dispensing equipment such as ice makers, coffee machines, and beverage dispensers or where indicated in the contract documents.
Beverage dispensing equipment backflow preventer
Provide a continuous pressure backflow preventer with stainless steel body, threaded connections and complies with ASSE 1022.
Carbonated beverage dispenser backflow preventer
Provide a continuous pressure dual check valve backflow preventer with stainless steel body, threaded connections and complies with ASSE 1032.
BALANCING VALVES
Provide balancing valves where required for proper balancing of water systems as shown on the contract documents.
Balancing valves shall be equal to Red-White Valve Corporation model 9517AB (NPT) or model 9519 (solder). Valve shall have brass body, globe valve regulation and isolation properties, fixed orifice design for precise measurement, integral memory stop to ensure repeatable setting, full shutoff without affecting memory settings, high and low pressure metering points, precision indicator windows, rugged top set hand-wheel assembly, pressure rating of 300 psi, and temperature rating of 15 deg. F to 260 deg. F.
VACUUM BREAKERS
Vacuum breakers shall be equal to Watts model LF288A for piping connections or Watts LF8 series for hose connections. Vacuum breakers shall comply with ASSE 1001 for piped connections, ASSE 1011 for hose connections, bronze body and threaded connections with rough bronze finish.
PRESSURE REDUCING VALVES
Provide pressure reducing valve to regulate incoming domestic water pressure in excessive of 80 psig. Pressure reducing valve shall be equal to Watts model LF223S, comply with ASSE 1003, initial working pressure of 300 psig, integral strainer, lead-free brass body with threaded connections.
STRAINERS
Provide lead-free wye-pattern strainer rated for 125 psig minimum, bronze body, threaded connections, stainless steel screen with round perforations of 0.020 inch and pipe plug drain. Provide strainers on supply side of each pressure reducing valve, solenoid valve and pump.
WALL HYDRANTS
Provide nonfreeze wall hydrants equal to Woodford model B-67 with chrome finish on brass casting with box and hinged door. Conceal within interior partitions. Furnish to owner with receipt one valve key for each key operated wall hydrant installed.
TRAP-SEAL PRIMER DEVICE
The plumbing contractor shall provide trap primers for all floor drains. Provide access panel in wall or ceiling for all concealed trap primers. Install trap seal primer valves with outlet piping pitched down toward drain trap a minimum of 1% and connect to floor drain body, trap or inlet fitting. Coordinate exact location with architect prior to installation.
Mechanical trap seal
The plumbing contractor shall provide mechanical trap seals for all floor drains as approved by the local authority having jurisdiction. Provide an elastomeric, mechanical trap seal device which utilizes a normally closed seal to prevent evaporation of the trap seal and sewer gases from backing up to habitable areas.
WATER TAB METERS
Displacement-Type Water Meters:
Plumbing contractor to coordinate with landlordfor exact model and manufacturer.
Description: Displacement-Type Water Meter complying with AWWA C700.
Remote Registration System: Direct-reading type complying with AWWA C706; modified with signal-transmitting assembly, low-voltage connecting wiring, and remote register assembly as required by landlord or owner. Mount reader in an accessible location.
WATER HAMMER ARRESTERS
Provide water-hammer arresters in water piping according to PDI-WH 201.
Standard: ASSE 1010 or PDI-WH 201.
Type: Metal bellows or copper tube with piston.
Size: ASSE 1010, sizes AA and A through F, or PDI-WH 201, sizes a through F.

22 11 23.00 – RECIRCULATION DOMESTIC WATER PUMP
Submittal Requirements
Product Data: For each type of product indicated.
GENERAL
Hot-water circulating pump shall be constructed of the following: in-line wet-rotor, lead-free bronze body, plastic impeller, with ceramic bearings. Working pressure to be a minimum 125 psig with a maximum continuous operating temperature of 220º F.
Pump shall be controlled with an aquastat and timer.
Aquastat: Electric; surface mounted sensing element.
Adjustable temperature control of hot-water circulation from 65 to 200 ºF.
Timer: Electric; for control of hot-water circulation.
Programmable type, seven-day, twenty-four hour clock with manual override on-off switch. Programmable for pre-set times during the day for each day for seven days.
Approved Manufacturers: Armstrong Pumps Inc, Bell & Gossett/Goulds Water Technology; Xylem Inc., Taco inc., Honeywell International inc.
Pumps shall conform to: UL 778, NSF 61/372.
CONNECTIONS
On water heating systems with separate storage tanks, interlock pump between water heater(s) and hot-water storage tank(s) with water heater burner and time-delay relay.

22 13 16.00 - SANITARY, WASTE AND VENT PIPING SYSTEM
Submittal Requirements
Product Data: For each type of product indicated.
GENERAL
Provide a complete soil, waste and vent system in the building and on the site as indicated on the drawings and as specified herein.
Above ground soil, waste and vent piping within buildings including soil stacks, vent stacks, horizontal branches, traps, and connections to fixtures and drains.
Underground building drain piping including mains, branches, traps, connections to fixtures and drains, and connections to stacks, terminating at connection to existing sanitary sewer.
INTERIOR PIPING
Choose either Cast Iron or ABS DWV piping.

No-Hub cast iron soil, waste, and vent piping and fittings 1-1/2" and larger shall conform to ASTM A-888.
Hub and Spigot cast iron soil, waste, and vent piping and fittings 2" and larger shall conform to ASTM A-74 with ASTM C-564 gasketed joints.
Soil, waste and vent piping smaller than 1-1/2" shall be Type "M" copper and conform to ASTM B-306.
No-hub cast iron pipe and fittings may be used aboveground for soil, waste, and vent piping.
Hub and spigot cast iron pipe may be used underground for soil, waste, and vent piping.
Piping alignment shall be as indicated on the drawings using approved wye branches or eight bands for direction changes and shall be surely supported or secured to maintain such alignment.
ABS DWV pipe and fittings shall be used throughout.
Contractor shall maintain integrity of fire ratings. Piping shall not be run in plenum spaces and contractor shall provide intumescent collars when penetrating a rated wall, floor, or other assembly.
Pitch of sanitary piping shall be uniform at a minimum of 1/4" per foot for building drains, drainage piping greater than 2" and as indicated on the drawings. Pitch of sanitary piping shall be uniform at a minimum of 1/4" per foot for drainage piping 2" and smaller and as indicated on the drawings.
Protection shall be given all footings, other structural elements during underground work adjacent to such items. Refer to architectural and/or structural drawings for locations.
Vent all fixtures, connect branch vents to main vent risers at least six inches above flood rim of fixtures. Pitch vent lines back to soil or waste pipe, free of drops and sags.
Cleanouts shall be full size of pipe up to 4", and 4" for larger sizes. For underground and concealed lines, provide cleanouts in accessible positions at each right angle turn and at intervals not to exceed fifty feet. In floors, install flush with finish floor with extension pipe from cleanout wye.

22 13 19.00 - SANITARY WASTE PIPING SPECIALTIES
Submittal Requirements
Product Data: For each type of product indicated.
CLEANOUTS
Floor cleanout equal to Zurn Z-1400 adjustable floor cleanout.
Wall cleanout equal to Zurn Z-1443 with smooth nickel bronze square wall access panel and frame.
Provide a sanitary tee and threaded cap cleanout plug in suspended waste piping.
Manufacturers: Subject to compliance with requirements, available products that may be incorporated into the work include, and are limited to, the following:
Jay R Smith MFG. Co., Watts Drainage Products Inc., Zurn Plumbing Products Group.
FLOOR DRAINS
Provide floor drains in compliance with ASME A112.6.3.
Provide floor drains with trap-seal primer fitting. All floor drains located in rooms with tile floors shall be provided with manufacturer's standard square grate, unless noted otherwise.
Refer to plumbing drain schedule for project specific floor drain manufacturers and models.
Manufacturers: Subject to compliance with requirements, available products that may be incorporated into the work include, and are limited to, the following:
Jay R Smith MFG. Co., Watts Drainage Products Inc., Zurn Plumbing Products Group.
FLOOR SINKS
Provide floor sinks in compliance with ASME A112.6.7. All floor sinks shall have a cast iron body unless noted otherwise. All floor sinks located in a commercial kitchen to have a half grate cover unless noted otherwise.
Refer to plumbing drain schedule for project specific floor drain manufacturers and models.
Manufacturers: Subject to compliance with requirements, available products that may be incorporated into the work include, and are limited to, the following:
Jay R Smith MFG. Co., Watts Drainage Products Inc., Zurn Plumbing Products Group.

22 30 01.00 - POINT OF USE THERMOSTATIC MIXING VALVES
Submittal Requirements
Product Data: For each type of product indicated.
GENERAL
Thermostatic mixing valves shall be provided for all public hand washing sinks and lavatories and shall be ASSE 1070 listed, lead free, sweat connections, 125 psi operating pressure. **Mount under sink or lavatory.** Set outlet temperature of thermostatic mixing valve to 105 degrees F.
Point-of use thermostatic mixing valves shall be equal to Powers LFG480. Route tempered water to hot water side of sink and lavatories.
Manufacturers: Subject to compliance with requirements, available manufacturers offering products that may be incorporated into the work include, and are limited to, the following:
Symmons, Acorn Engineering, Powers, Bradley

22 33 00.00 - COMMERCIAL ELECTRIC, DOMESTIC WATER HEATERS
Submittal Requirements
Product Data: For each type of product indicated.
TANK TYPE
Provide commercial electric tank type water heater as scheduled. Comply with UL 1453 Standard.
Provide corrosion resistant metal drain pan with raised edges at the base of the water heater and include drain outlet.
Provide field fabricated piping heat trap arrangement according to ASHRAE/IESNA 90.1.
Provide combination temperature and pressure relief valve, ASME rated and stamped with relieving capacity at least as great as heat input and pressure setting less than water heater's rated operating pressure.
Provide water heater stands or mounting brackets with manufacturer's factory fabricated steel capable of supporting water heater.
Provide steel pressure-rated thermal expansion tank constructed with welded joints and factory-installed butyl rubber diaphragm, pre-charged to minimum system operating pressure at tank.
Manufacturers: Subject to compliance with requirements, available manufacturers offering products that may be incorporated into the work include, and are limited to, the following:
Bradford White Corp.,

22 40 00.00 - PLUMBING FIXTURES
Submittal Requirements
Product Data: For each type of product indicated.
GENERAL
Refer to plumbing fixture schedule and install per the manufacturer's installation and operation manual.
Manufacturers: Subject to compliance with requirements, available manufacturers offering products that may be incorporated into the work include, and are limited to, the following:
American Standard, Kohler Co., Zurn Industries, LLC.

KLH ENGINEERS
KOHRS LONNEMANN HEIL ENGINEERS, INC.
444 SOUTH FRONT STREET
COLUMBUS, OHIO 43215
800-354-9783 614-228-2180
614-228-2183 FAX
MECHANICAL/ELECTRICAL ENGINEERS
WWW.KLHENGRS.COM
FORT THOMAS, KENTUCKY
LEXINGTON, KENTUCKY
LOUISVILLE, KENTUCKY
NEW YORK, NEW YORK

PERMIT SET - FOR CONSTRUCTION

© 2022 STARBUCKS COFFEE COMPANY

STARBUCKS COFFEE COMPANY
2401 UTAH AVENUE SOUTH
SEATTLE, WASHINGTON 98134
(206) 318-1575

THESE DRAWINGS AND PROJECT MANUAL ARE CONFIDENTIAL AND SHALL REMAIN THE SOLE PROPERTY OF STARBUCKS CORPORATION, WHICH IS THE OWNER OF THE COPYRIGHT IN THIS WORK. THEY SHALL NOT BE REPRODUCED (IN WHOLE OR IN PART), SHARED WITH THIRD PARTIES OR USED IN ANY MANNER ON OTHER PROJECTS OR EXTENSIONS TO THIS PROJECT WITHOUT THE PRIOR WRITTEN CONSENT OF STARBUCKS CORPORATION. THESE DRAWINGS AND SPECIFICATIONS ARE INTENDED TO EXPRESS DESIGN INTENT FOR A PROTOTYPICAL STARBUCKS STORE (WHICH IS SUBJECT TO CHANGE AT ANYTIME) AND DO NOT REFLECT ACTUAL SITE CONDITIONS. NEITHER PARTY SHALL HAVE ANY OBLIGATION NOR LIABILITY TO THE OTHER (EXCEPT STATED ABOVE) UNTIL A WRITTEN AGREEMENT IS FULLY EXECUTED BY BOTH PARTIES.

STARBUCKS TEMPLATE VERSION i2022.10.23

Gensler
MAIN OFFICE
M. ARTHUR GENSLER JR. & ASSOCIATES
FL QUALIFIER'S LIC. NO. AR96486
45 FREMONT ST, SUITE 1500
SAN FRANCISCO, CA 94105 USA
Tel (415) 433.3700
Fax (415) 836.4599
SATELLITE OFFICE
10 NORTH PARK PLACE
SUITE 400
MORRISTOWN, NJ 07960 USA
Tel (973) 290.8500

PROJECT NAME:
ST LUCIE WEST & SW CASHEMERE BLVD

PROJECT ADDRESS:
920 SW SAINT LUCIE BLVD,
PORT ST.LUCIE, FL 34986

STORE #: 81616
PROJECT #: 101357-001
ISSUE DATE: 06-27-2025
STORE DESIGNER:
DESIGN MANAGER: ASHLEY SUEIRAS
ENGINEER OF RECORD: GENSLER KLH ENGINEERS

Revision Schedule

Rev	Date	By	Description

SHEET TITLE:
PLUMBING OUTLINE SPECIFICATIONS
SCALE: AS SHOWN

SHEET NUMBER:
P003

STARBUCKS OWNER'S PROJECT REQUIREMENTS AND BASIS OF DESIGN

DELIVERED TEMP - See MEP Design Guidelines and Water Supply Matrix		
HOT WATER SYSTEM	140°F	
BREWING	COLD	
HAND SINKS	100-110°F WITHIN 15 SEC.	
PRE-RINSE	100-110°F WITHIN 15 SEC.	
DISHWASHER	COLD	
UTILITY/MOP	110-120°F WITHIN 15 SEC.	
PIPING		
MATERIAL	COPPER OR PEX	
INSULATION	HOT SUPPLY AND RECIRC RETURN	
HOT WATER SYSTEM		
TYPE	50 GAL TANK	TANK
ENERGY SOURCE	ELECTRIC PREFERRED WHEN AVAILABLE	ELECTRIC / HEAT PUMP
EFFICIENCY	90% ELECTRIC	%
MIXING VALVE		
	140 MAX. DESIGN TEMP TO ACHIEVE FAUCET TEMPS	MIXING VALVE SETPOINT
RECIRCULATION PUMP		
SCHEDULE	CONTINUOUS W/ HOUR OF OPERATION	
WATER EFFICIENCY		
TOILET	1.28 GPF (4.8 LPF) / MANUAL	
URINAL	0.125 GPF / MANUAL	
DIPPERWELL	0.5 GPM / METERED	
PRE-RINSE VALVE	0.67 GPM	
RESTROOM HAND SINK	0.5 GPM (1.9 LPM) / MANUAL	
BACKLINE HAND SINK	0.5 GPM (1.9 LPM) / MANUAL	
WORKROOM HANDSINK	0.5 GPM (1.9 LPM) / MANUAL	
FILTRATION - See MEP Design Guidelines and Cold Water Supply Matrix		
BREWING	FILTERED W/ CONFIGURATION I	
HAND SINKS	COLD WATER	
HOT WATER	COLD WATER	
PRE-RINSE	COLD WATER	
DISHWASHER	COLD WATER	
UTILITY / MOP	COLD WATER	
ICE MACHINE		
	REMOTE	
DISHWASHER		
	HOBART ADVANSYS	

PLUMBING SCOPE OF WORK SUMMARY

THE FOLLOWING SCOPE OF WORK IS BASED ON THE LANDLORD'S WORKLETTER EXHIBIT C. THIS SCOPE OF WORK IS NOT INTENDED TO INDICATE THE FULL SCOPE, BUT ONLY A BROAD SUMMARY. THE GENERAL CONTRACTOR SHALL REFERENCE THE COMPLETE WORKLETTER FOR A MORE DETAILED DESCRIPTION OF WORK BY BOTH PARTIES. ANY QUESTIONS REGARDING SCOPE SHALL BE BROUGHT TO STARBUCKS ATTENTION FOR CLARIFICATION. RESPONSIBILITY INDICATED BELOW MEANS FURNISHED, PERMITTED AND INSTALLED BY THE PARTY INDICATED.

WORK DESCRIPTION	RESPONSIBILITY	
	LANDLORD	STARBUCKS
WATER SERVICE AND METER	X	--
BOOSTER PUMP FOR WATER SERVICE	N/A	--
BELOW FLOOR / SLAB WASTE, VENT AND WATER PIPES	--	X
ABOVE FLOOR / SLAB WASTE, VENT AND WATER PIPES	--	X
PLUMBING VENT(S) THROUGH ROOF	X	--
EXTERIOR HOSE BIBBS	X	--
BASE COVERAGE SPRINKLER SYSTEM	X	--
SPRINKLER SYSTEM MODIFICATIONS FOR TENANT BUILDOUT	X	--
INTERIOR HGI GREASE TRAP (S)	N/A	--
EXTERIOR GGI GREASE INTERCEPTOR	X	--
WATER FILTRATION BOOSTER PUMP	--	X

KEYED NOTES

P04 CONNECT NEW DOMESTIC CW PIPING TO EXISTING DOMESTIC CW PIPING. EXISTING DOMESTIC CW PIPING TO BE EQUAL OR LARGER IN SIZE. VERIFY EXISTING SYSTEM TYPE, PIPE SIZE, PIPE LOCATION & WATER PRESSURE PRIOR TO MAKING CONNECTIONS. IF THE CONDITIONS IN THE FIELD ARE DIFFERENT THAN WHAT IS SHOWN ON THE DRAWINGS, NOTIFY ENGINEER OF RECORD IMMEDIATELY.

P06 REFER TO LANDLORD/ SHELL DRAWINGS FOR CONTINUATION.

P07 DOMESTIC COLD WATER PIPING DISTRIBUTION SYSTEM IS SIZED WITH THE ASSUMPTION OF 50 PSI RESIDUAL MINIMUM INCOMING WATER PRESSURE AVAILABLE AT THE POINT OF ENTRANCE OF STARBUCKS SPACE AT STORE PEAK DEMAND. IF THE INCOMING PRESSURE IS LESS THAN 50 PSI AT THE POINT OF ENTRANCE OF STARBUCKS SPACE, LANDLORD TO PROVIDE BOOSTER PUMP AND SURGE TANK. IF THE MAXIMUM DYNAMIC PRESSURE IS MORE THAN 65 PSI, PROVIDE PRESSURE REDUCING VALVE.

P08 PROVIDE ASSE 1070 COMPLIANT THERMOSTATIC MIXING VALVE.

P10 CW & FW PIPING BELOW FLOOR TO ISLAND FIXTURES.

GENERAL NOTES

A. FURNISH AND INSTALL A COMPLETE AND OPERATING SYSTEM. ALL ITEMS ARE NOT NECESSARILY SHOWN.

B. PLUMBING CONTRACTOR RESPONSIBLE FOR SITE INVESTIGATION PRIOR TO START OF WORK TO REVEAL FULL SCOPE OF WORK.

c. ALL PLUMBING LINES TO BE ROUTED SUCH THAT THEY ARE NOT VISIBLE TO CUSTOMERS EXCEPT WHERE FIRST APPROVED BY STARBUCKS AT EXPOSED CEILING AREAS.

D. REFER TO MANUFACTURER SPECIFICATIONS FOR LOCATION OF CONNECTIONS UNLESS OTHERWISE NOTED.

E. COORDINATE WITH ELECTRICAL CONTRACTOR FOR POWER CONNECTION TO ALL PLUMBING EQUIPMENT.

F. REFERENCE WORKLETTER FOR DIVISION OF PLUMBING SCOPE OF WORK AND COORDINATE WITH STARBUCKS CONSTRUCTION MANAGER.

G. DIMENSIONS ARE TO FINISH FACE UNLESS OTHERWISE NOTED.

H. REFER TO DETAIL SHEETS FOR PLUMBING FITTINGS LOCATED IN CASEWORK.

I. COLD WATER SUPPLY LINES INSIDE CASEWORK AND BAR AREA TO BE COVERED WITH 1/2" (10MM) THICK SELF SEALING, SECTIONAL CLOSED-CELL FOAM INSULATION. REFER TO SPECIFICATIONS FOR HOT WATER SUPPLY LINE INSULATION REQUIREMENTS.

J. INSULATE ALL PIPING INCLUDING PIPES AT BAR AND IN CASEWORK PER THE REQUIREMENTS LISTED IN THE PROJECT MANUAL.

K. GENERAL CONTRACTOR SHALL CONTACT WATER FILTRATION SUPPLIER TO COORDINATE SOW AND SCHEDULE PRIOR TO INSTALLATION OF WATER FILTRATION SYSTEM.

J. REFER TO PLUMBING FIXTURE AND EQUIPMENT SCHEDULE FOR BACKFLOW PREVENTER AND WATER HAMMER ARRESTOR INFORMATION.

PLUMBING NOTE

DOMESTIC COLD WATER PIPING DISTRIBUTION SYSTEM IS SIZED WITH THE ASSUMPTION OF 50 PSI RESIDUAL MINIMUM INCOMING WATER PRESSURE AVAILABLE AT THE POINT OF ENTRANCE OF STARBUCKS SPACE. IF THE INCOMING PRESSURE IS LESS THAN 50 PSI AT THE POINT OF ENTRANCE OF STARBUCKS SPACE, LANDLORD TO PROVIDE BOOSTER PUMP AND SURGE TANK. IF THE MAXIMUM DYNAMIC PRESSURE IS MORE THAN 65 PSI, PROVIDE PRESSURE REDUCING VALVE.

PLUMBING PIPING LEGEND

- DOMESTIC COLD WATER PIPING
- DOMESTIC HOT WATER PIPING (140)
- DOMESTIC HOT WATER RETURN PIPING (140)
- FILTERED WATER PIPING

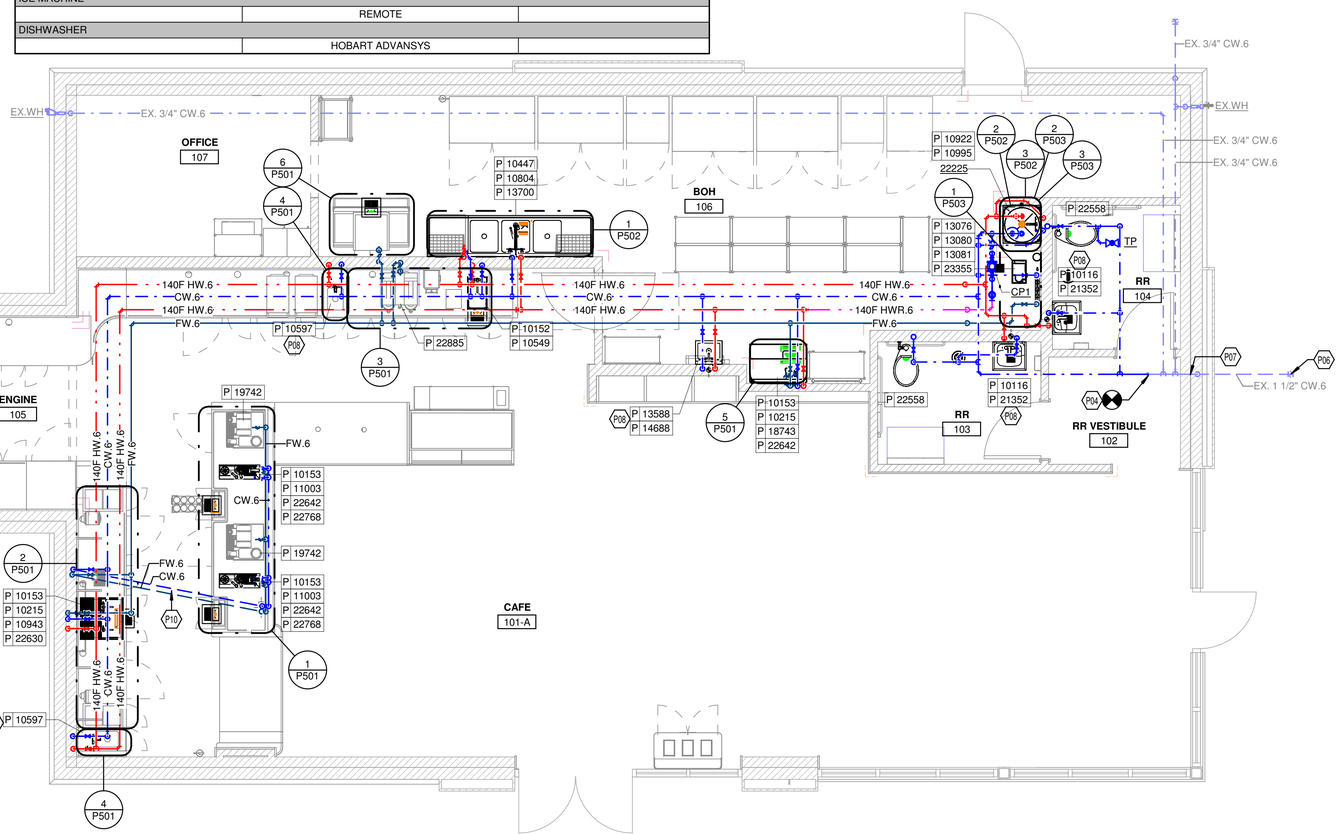

1 PLUMBING SUPPLY PLAN
1/4" = 1'-0"

N

0 2' 4' 8'
Scale: 1/4" = 1'-0"

KLH ENGINEERS
MECHANICAL/ELECTRICAL ENGINEERS
WWW.KLHENGRS.COM
KOHRS LONNEMANN HEIL ENGINEERS, INC.
444 SOUTH FRONT STREET
COLUMBUS, OHIO 43215
800-354-9783 614-228-2180
614-228-2183 FAX
FORT THOMAS, KENTUCKY
LEXINGTON, KENTUCKY
LOUISVILLE, KENTUCKY
NEW YORK, NEW YORK

PERMIT SET - FOR CONSTRUCTION

© 2022 STARBUCKS COFFEE COMPANY

STARBUCKS COFFEE COMPANY
2401 UTAH AVENUE SOUTH
SEATTLE, WASHINGTON 98134
(206) 318-1575

THESE DRAWINGS AND PROJECT MANUAL ARE CONFIDENTIAL AND SHALL REMAIN THE SOLE PROPERTY OF STARBUCKS CORPORATION, WHICH IS THE OWNER OF THE COPYRIGHT IN THIS WORK. THEY SHALL NOT BE REPRODUCED (IN WHOLE OR IN PART), SHARED WITH THIRD PARTIES OR USED IN ANY MANNER ON OTHER PROJECTS OR EXTENSIONS TO THIS PROJECT WITHOUT THE PRIOR WRITTEN CONSENT OF STARBUCKS CORPORATION. THESE DRAWINGS AND SPECIFICATIONS ARE INTENDED TO EXPRESS DESIGN INTENT FOR A PROTOTYPICAL STARBUCKS STORE (WHICH IS SUBJECT TO CHANGE AT ANYTIME) AND DO NOT REFLECT ACTUAL SITE CONDITIONS. NEITHER PARTY SHALL HAVE ANY OBLIGATION NOR LIABILITY TO THE OTHER (EXCEPT STATED ABOVE) UNTIL A WRITTEN AGREEMENT IS FULLY EXECUTED BY BOTH PARTIES.

STARBUCKS TEMPLATE VERSION i2022.10.23

Gensler
MAIN OFFICE
M. ARTHUR GENSLER JR. & ASSOCIATES
FL QUALIFIER'S LIC. NO. AR96486
45 FREMONT ST, SUITE 1500
SAN FRANCISCO, CA 94105 USA
Tel (415) 433.3700
Fax (415) 836.4599
SATELLITE OFFICE
10 NORTH PARK PLACE
SUITE 400
MORRISTOWN, NJ 07960 USA
Tel (973) 290.8500

PROJECT NAME:
ST LUCIE WEST & SW CASHEMERE BLVD

PROJECT ADDRESS:
920 SW SAINT LUCIE BLVD,
PORT ST.LUCIE, FL 34986

STORE #: 81616
PROJECT #: 101357-001
ISSUE DATE: 06-27-2025
STORE DESIGNER: ASHLEY SUEIRAS
DESIGN MANAGER: GENSLER
ENGINEER OF RECORD: KLH ENGINEERS

Revision Schedule

Rev	Date	By	Description

SHEET TITLE:
PLUMBING SUPPLY PLAN
SCALE: AS SHOWN

SHEET NUMBER:
P101

9/17/2025 12:15:06 PM 27472.00-23-MEP-SBX- Port St. Lucie, FL_detached.rvt

Quote: 386X3FA7

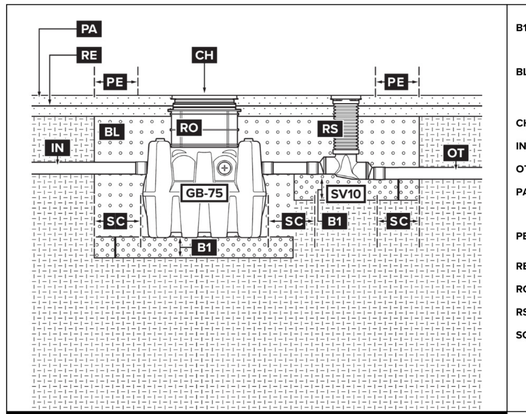

DETAIL Coffee Shop - Port St. Lucie, FL (81616) **Outdoors, Below Grade**

GB-75 GREASE INTERCEPTOR 75 GPM, 4" PLAIN/FPT CONNECTIONS, H-20 RATED PICKABLE CAST IRON COVER

SV10 SEWER VIEWER SAMPLING PORT, 4" CONNECTIONS (FIELD MODIFIABLE TO 6"), POLYETHELENE COVER

Disclaimer: this Detail represents manufacturer directed guidance regarding the grease interceptor system. The contents of this document are not a substitute for local jurisdiction requirements and plumbing code standards. Please follow all local ordinances when installing.

B1 6" minimum compacted base - clean, crushed stone approximately 1" in size (AASHTO M43 Size #57 or similar) free of debris and fines.

BL Backfill evenly around the interceptor and risers with clean, crushed stone approximately 1" in size (AASHTO M43 Size #57 or similar) free of debris and fines.

CH H-20 load rated cast iron cover

IN 4" diameter inlet pipe

OT 4" diameter outlet pipe

PA Minimum 8" thick concrete pad with rebar required for vehicular traffic. Concrete to be 28 day compressive strength to 4,000 PSI.

PE Pad to extend 18" minimum beyond edge of tank on all sides.

RE No. 4 rebar, grade 60 steel

RO FCR2 field cut riser to grade

RS FCR10 field cut riser to grade

SC 12" clear all sides

SCHIER

LIFETIME GUARANTEED
GREASE INTERCEPTORS

schierproducts.com

KEYED NOTES

P01 EXISTING GREASE PIPING BY LANDLORD TO EXTERIOR GREASE TRAP. REFER TO LANDLORD DRAWINGS FOR MORE INFORMATION.

P02 CONNECT NEW SANITARY PIPING TO EXISTING SANITARY PIPING STUB UP PROVIDED BY LANDLORD. EXISTING SANITARY PIPING TO BE EQUAL OR LARGER IN SIZE. VERIFY EXISTING SYSTEM TYPE, PIPE SIZE, PIPE INVERT & PIPE LOCATION PRIOR TO MAKING CONNECTIONS. IF THE CONDITIONS IN THE FIELD ARE DIFFERENT THAN WHAT IS SHOWN ON THE DRAWINGS, NOTIFY ENGINEER OF RECORD IMMEDIATELY.

P03 CONNECT NEW GREASE PIPING TO EXISTING GREASE PIPING STUB UP PROVIDED BY LANDLORD. EXISTING GREASE PIPING TO BE EQUAL OR LARGER IN SIZE. VERIFY EXISTING SYSTEM TYPE, PIPE SIZE, PIPE INVERT & PIPE LOCATION PRIOR TO MAKING CONNECTIONS. IF THE CONDITIONS IN THE FIELD ARE DIFFERENT THAN WHAT IS SHOWN ON THE DRAWINGS, NOTIFY ENGINEER OF RECORD IMMEDIATELY.

P05 CONNECT NEW VENT PIPING TO EXISTING VENT PIPING. EXISTING VENT PIPING TO BE EQUAL OR LARGER IN SIZE. VERIFY EXISTING SYSTEM TYPE, PIPE SIZE & PIPE LOCATION PRIOR TO MAKING CONNECTIONS. IF THE CONDITIONS IN THE FIELD ARE DIFFERENT THAN WHAT IS SHOWN ON THE DRAWINGS, NOTIFY ENGINEER OF RECORD IMMEDIATELY.

P06 REFER TO LANDLORD/ SHELL DRAWINGS FOR CONTINUATION.

P09 EXISTING VTR ABOVE ROOF PROVIDED BY LANDLORD.

P11 ROUTE DRAIN FROM DISHWASHER TO NEARBY FLOOR SINK UNDER THE 3 COMPARTMENT SINK AND DISCHARGE INDIRECTLY ABOVE IT.

GENERAL NOTES

A. ALL PLUMBING LINES TO BE ROUTED SUCH THAT THEY ARE NOT VISIBLE TO CUSTOMERS EXCEPT WHERE FIRST APPROVED BY STARBUCKS AT EXPOSED CEILING AREAS.

B. REFER TO MANUFACTURER SPECIFICATIONS FOR LOCATION OF CONNECTIONS UNLESS OTHERWISE NOTED.

C. COORDINATE WITH ELECTRICAL CONTRACTOR FOR POWER CONNECTION TO ALL PLUMBING EQUIPMENT.

D. DIMENSIONS ARE TO FINISH FACE UNLESS OTHERWISE NOTED.

E. REFER TO DETAIL SHEETS FOR PLUMBING FITTINGS LOCATED IN CASEWORK.

F. WHEN BUNDLING SEVERAL INDIRECT WASTE LINES TO DRAIN INTO A FLOOR SINK, A UNISTRUT IS REQUIRED FOR SECURING AND BRACING ALL LINES ABOVE THE DRAIN.

G. FURNISH & INSTALL ALL NEEDED INDIRECT DRAINS PER CODE (NOT ALL SHOWN). INSTALL DRAINS AT 2% SLOPE WHERE POSSIBLE WITHOUT DIPS OR SAGS. ALL INDIRECT DRAINS SHALL RUN SEPARATELY FROM EACH OTHER TO INDIRECT DRAIN RECEPTOR AND SHALL TERMINATE WITH AN AIR GAP PER CODE.

H. FURNISH & INSTALL WALL CLEANOUTS AT ALL SINKS AND AS NEEDED AND PER CODE (NOT ALL SHOWN).

I. INSULATE ICE BIN DRAINAGE PIPES PER THE REQUIREMENTS ON THE PROJECT MANUAL.

J. FURNISH AND INSTALL CLEANOUTS ON ALL INDIRECT WASTE LINES AT VERTICAL-HORIZONTAL JUNCTIONS.

K. UTILIZE 45 DEGREE ELBOW JOINTS ON WASTE LINES TO REDUCE CLOGS.

PLUMBING PIPING LEGEND

SANITARY WASTE PIPING

GREASE WASTE PIPING

VENT PIPING

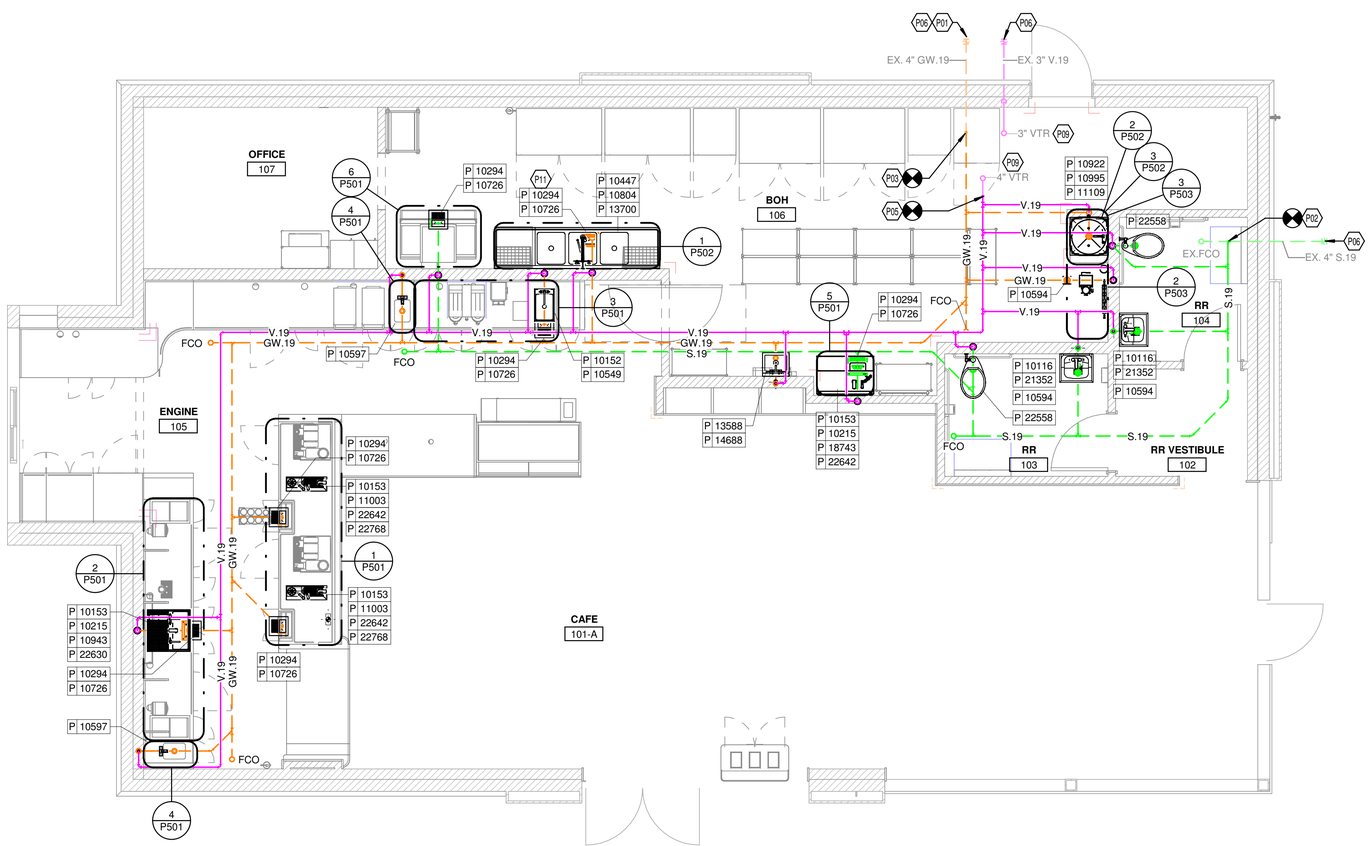

1 PLUMBING WASTE AND VENT PLAN
1/4" = 1'-0"

N

0 2' 4' 8'
Scale: 1/4" = 1'-0"

KLH ENGINEERS

MECHANICAL/ELECTRICAL ENGINEERS

WWW.KLHENGRS.COM

KOHRS LONNEMANN HEIL ENGINEERS, INC.
444 SOUTH FRONT STREET
COLUMBUS, OHIO 43215
800-354-9783 614-228-2180
614-228-2183 FAX

FORT THOMAS, KENTUCKY
LEXINGTON, KENTUCKY
LOUISVILLE, KENTUCKY
NEW YORK, NEW YORK

PERMIT SET - FOR CONSTRUCTION

© 2022 STARBUCKS COFFEE COMPANY

STARBUCKS COFFEE COMPANY
2401 UTAH AVENUE SOUTH
SEATTLE, WASHINGTON 98134
(206) 318-1575

THESE DRAWINGS AND PROJECT MANUAL ARE CONFIDENTIAL AND SHALL REMAIN THE SOLE PROPERTY OF STARBUCKS CORPORATION, WHICH IS THE OWNER OF THE COPYRIGHT IN THIS WORK. THEY SHALL NOT BE REPRODUCED (IN WHOLE OR IN PART), SHARED WITH THIRD PARTIES OR USED IN ANY MANNER ON OTHER PROJECTS OR EXTENSIONS TO THIS PROJECT WITHOUT THE PRIOR WRITTEN CONSENT OF STARBUCKS CORPORATION. THESE DRAWINGS AND SPECIFICATIONS ARE INTENDED TO EXPRESS DESIGN INTENT FOR A PROTOTYPICAL STARBUCKS STORE (WHICH IS SUBJECT TO CHANGE AT ANYTIME) AND DO NOT REFLECT ACTUAL SITE CONDITIONS. NEITHER PARTY SHALL HAVE ANY OBLIGATION NOR LIABILITY TO THE OTHER (EXCEPT STATED ABOVE) UNTIL A WRITTEN AGREEMENT IS FULLY EXECUTED BY BOTH PARTIES.

STARBUCKS TEMPLATE VERSION i2022.10.23

Gensler

MAIN OFFICE
M. ARTHUR GENSLER JR. & ASSOCIATES
FL QUALIFIER'S LIC. NO. AR96486
45 FREMONT ST, SUITE 1500
SAN FRANCISCO, CA 94105 USA
Tel (415) 433.3700
Fax (415) 836.4599

SATELLITE OFFICE
10 NORTH PARK PLACE
SUITE 400
MORRISTOWN, NJ 07960 USA
Tel (973) 290.8500

PROJECT NAME:
ST LUCIE WEST & SW
CASHEMERE BLVD

PROJECT ADDRESS:
920 SW SAINT LUCIE BLVD,
PORT ST.LUCIE, FL 34986

STORE #:	81616
PROJECT #:	101357-001
ISSUE DATE:	06-27-2025
STORE DESIGNER:	ASHLEY SUEIRAS
DESIGN MANAGER:	GENSLER
ENGINEER OF RECORD:	KLH ENGINEERS

Revision Schedule

Rev	Date	By	Description
1	9/4/25		Revision 1

SHEET TITLE:
PLUMBING WASTE AND VENT PLAN
SCALE: AS SHOWN

SHEET NUMBER:
P102

9/17/2025 12:15:18 PM 27472.00-23-MEP-SBX- Port St, St. Lucie, FL_detached.rvt

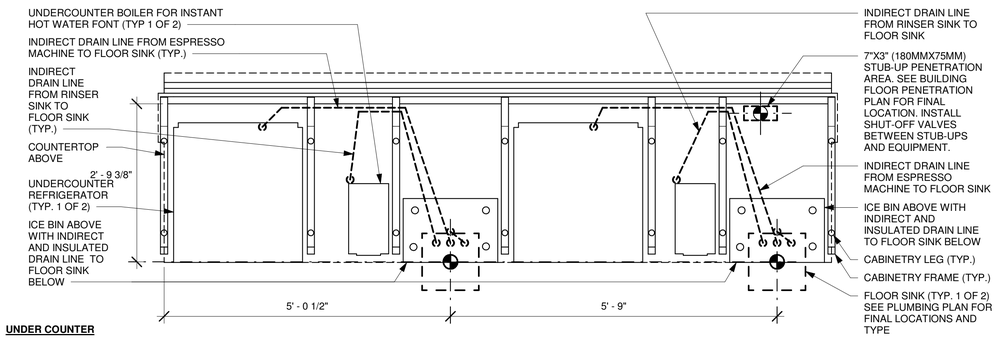

UNDER COUNTER

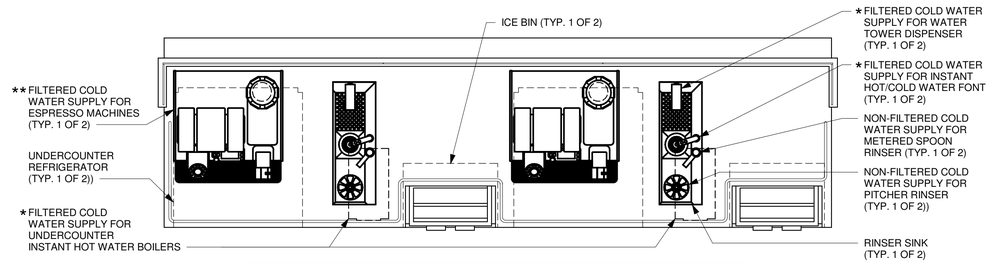

ABOVE COUNTER

ADAPTABLE CASEWORK DETAIL

★PROVIDE WATER HAMMER ARRESTOR PRIOR TO SHUT-OFF VALVE AND FLEX HOSE CONNECTION
★★PROVIDE BACKFLOW PREVENTION DEVICE BEFORE PUMP AND WATER HAMMER ARRESTOR PRIOR TO SHUT-OFF VALVE AND FLEX HOSE

1 ESP 04-02 PLUMBING
3/4" = 1'-0"

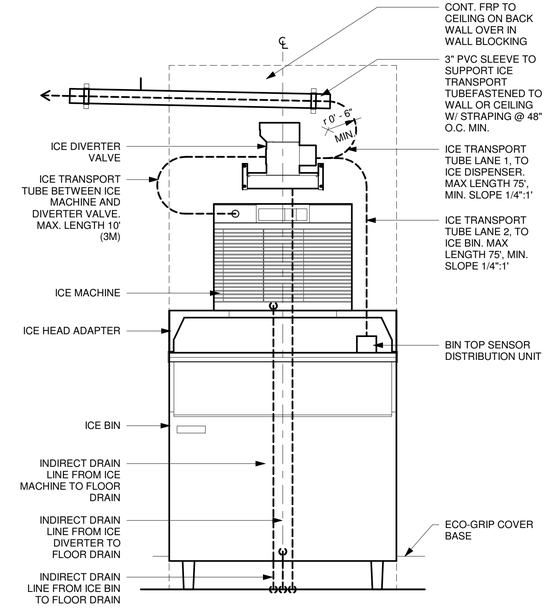

ELEVATION - PLUMBING DIAGRAM

NOTE:
INDIRECT DRAIN MIN. RADIUS = 8"
ICE TRANSPORT TUB MIN. RADIUS = 6"

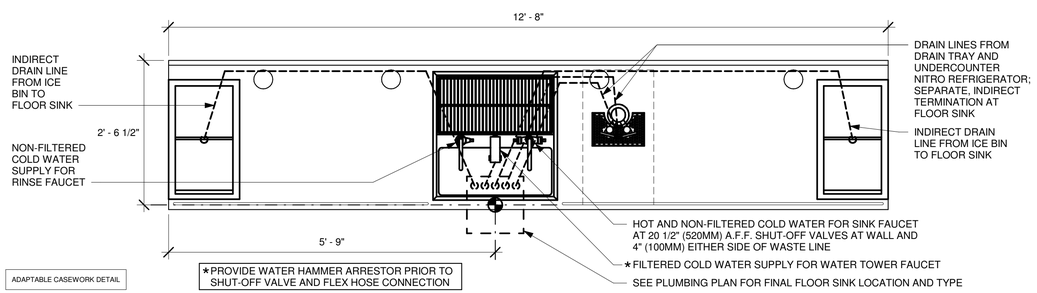

ADAPTABLE CASEWORK DETAIL

★PROVIDE WATER HAMMER ARRESTOR PRIOR TO SHUT-OFF VALVE AND FLEX HOSE CONNECTION

2 CBE 14-02 PLUMBING
3/4" = 1'-0"

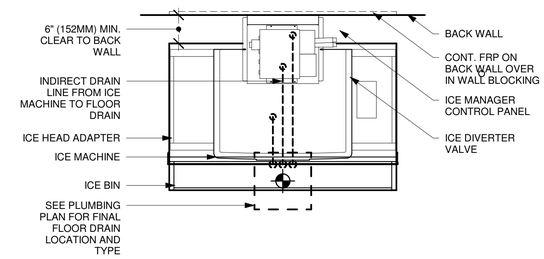

PLAN - PLUMBING DIAGRAM

NOTE:
INDIRECT DRAIN MIN. RADIUS = 8"
ICE TRANSPORT TUB MIN. RADIUS = 6"

6 14_PLUMBING---NUGGET-ICE---PEDESTAL-STACK
3/4" = 1'-0"

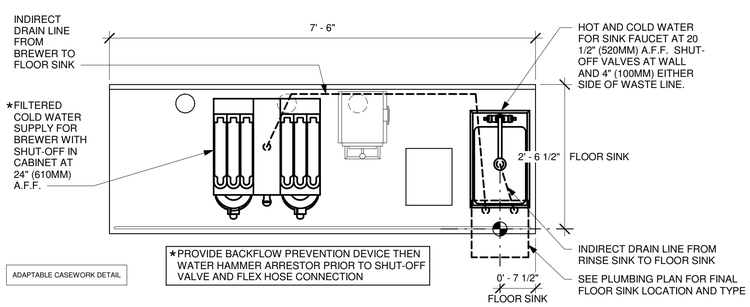

ADAPTABLE CASEWORK DETAIL

★PROVIDE BACKFLOW PREVENTION DEVICE THEN WATER HAMMER ARRESTOR PRIOR TO SHUT-OFF VALVE AND FLEX HOSE CONNECTION

3 BRW 09-01 PLUMBING
3/4" = 1'-0"

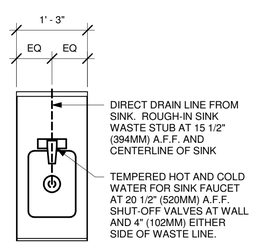

ADAPTABLE CASEWORK DETAIL

4 ADD-ON HAND SINK PLUMBING
3/4" = 1'-0"

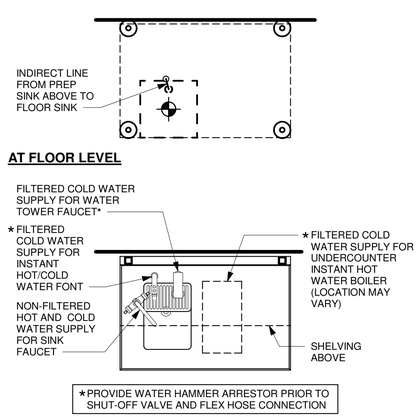

AT FLOOR LEVEL

★PROVIDE WATER HAMMER ARRESTOR PRIOR TO SHUT-OFF VALVE AND FLEX HOSE CONNECTION

ABOVE COUNTERTOP

5 WATER FILLING STATION - PLUMBING
3/4" = 1'-0"

0 1' 2' 3'
Scale: 3/4" = 1'-0"

KLH ENGINEERS
KOHRS LONNEMANN HEIL ENGINEERS, INC.
444 SOUTH FRONT STREET
COLUMBUS, OHIO 43215
800-354-9783 614-228-2180
614-228-2183 FAX

MECHANICAL/ELECTRICAL ENGINEERS
WWW.KLHENGRS.COM

FORT THOMAS, KENTUCKY
LEXINGTON, KENTUCKY
LOUISVILLE, KENTUCKY
NEW YORK, NEW YORK

PERMIT SET - FOR CONSTRUCTION

© 2022 STARBUCKS COFFEE COMPANY

STARBUCKS COFFEE COMPANY
2401 UTAH AVENUE SOUTH
SEATTLE, WASHINGTON 98134
(206) 318-1575

THESE DRAWINGS AND PROJECT MANUAL ARE CONFIDENTIAL AND SHALL REMAIN THE SOLE PROPERTY OF STARBUCKS CORPORATION, WHICH IS THE OWNER OF THE COPYRIGHT IN THIS WORK. THEY SHALL NOT BE REPRODUCED (IN WHOLE OR IN PART), SHARED WITH THIRD PARTIES OR USED IN ANY MANNER ON OTHER PROJECTS OR EXTENSIONS TO THIS PROJECT WITHOUT THE PRIOR WRITTEN CONSENT OF STARBUCKS CORPORATION. THESE DRAWINGS AND SPECIFICATIONS ARE INTENDED TO EXPRESS DESIGN INTENT FOR A PROTOTYPICAL STARBUCKS STORE (WHICH IS SUBJECT TO CHANGE AT ANYTIME) AND DO NOT REFLECT ACTUAL SITE CONDITIONS. NEITHER PARTY SHALL HAVE ANY OBLIGATION NOR LIABILITY TO THE OTHER (EXCEPT STATED ABOVE) UNTIL A WRITTEN AGREEMENT IS FULLY EXECUTED BY BOTH PARTIES.

STARBUCKS TEMPLATE VERSION |2022.10.23

Gensler
MAIN OFFICE
M. ARTHUR GENSLER JR. & ASSOCIATES
FL QUALIFIER'S LIC. NO. AR96486
45 FREMONT ST, SUITE 1500
SAN FRANCISCO, CA 94105 USA
Tel (415) 433.3700
Fax (415) 836.4599
SATELLITE OFFICE
10 NORTH PARK PLACE
SUITE 400
MORRISTOWN, NJ 07960 USA
Tel (973) 290.8500

PROJECT NAME:
ST LUCIE WEST & SW CASHEMERE BLVD

PROJECT ADDRESS:
920 SW SAINT LUCIE BLVD,
PORT ST.LUCIE, FL 34986

STORE #:	81616
PROJECT #:	101357-001
ISSUE DATE:	06-27-2025
STORE DESIGNER:	ASHLEY SUEIRAS
DESIGN MANAGER:	GENSLER
ENGINEER OF RECORD:	KLH ENGINEERS

Revision Schedule

Rev	Date	By	Description

SHEET TITLE:
PLUMBING DETAILS

SCALE: AS SHOWN

SHEET NUMBER:
P501

9/17/2025 12:15:19 PM 27472.00-23-MEP-SBX- Port St, St. Lucie, FL_detached.rvt

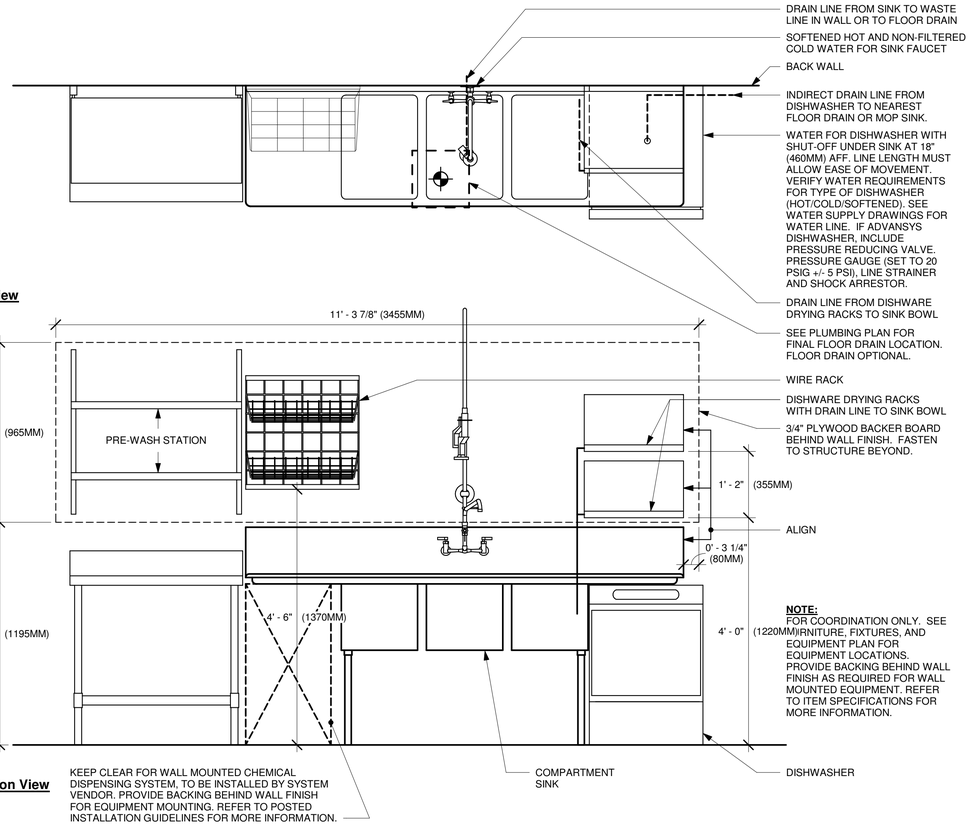

1 SANITIZING (GENERIC) - PLUMBING
3/4" = 1'-0"

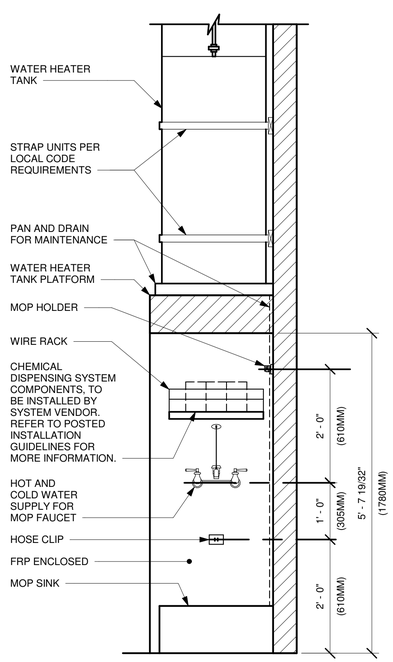

2 MOP SINK (STACKED) - PLUMBING
3/4" = 1'-0"

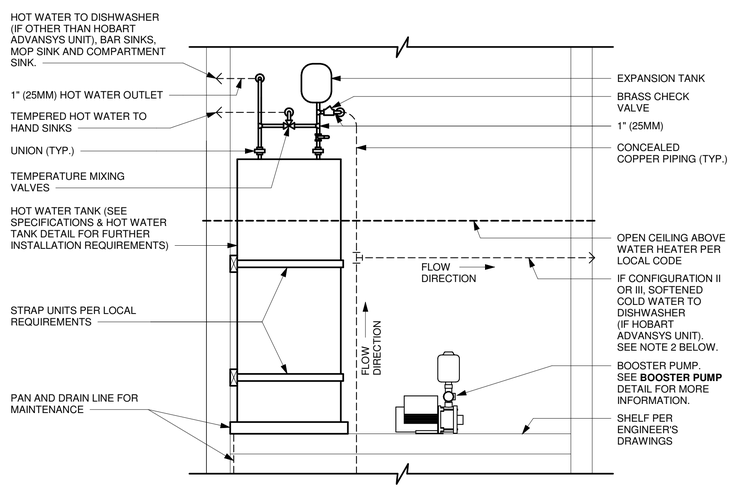

NOTES:
1. ALL COMPONENTS DRAWN IN BOLD ARE GC RESPONSIBILITY.
2. ALL PIPING SHALL BE COPPER EXCEPT PEX TYPE PIPING WHICH IS ACCEPTABLE BETWEEN FILTER SYSTEM COMPONENTS AND ADVANSYS DISHWASHER WHERE ALLOWED BY CODE.
3. COORDINATE WITH ELECTRICAL CONTRACTOR FOR RECEPTACLES.
4.. ENSURE ALL PENETRATIONS THROUGH SURROUNDING WALLS AND CEILING ARE COMPLETELY SEALED..

3 WATER HEATER TANK - PLUMBING
3/4" = 1'-0"

0 1' 2' 3'
Scale: 3/4" = 1'-0"

KLH ENGINEERS
MECHANICAL/ELECTRICAL ENGINEERS
WWW.KLHENGRS.COM
KOHRS LONNEMANN HEIL ENGINEERS, INC.
444 SOUTH FRONT STREET
COLUMBUS, OHIO 43215
800-354-9783 614-228-2180
614-228-2183 FAX
FORT THOMAS, KENTUCKY
LEXINGTON, KENTUCKY
LOUISVILLE, KENTUCKY
NEW YORK, NEW YORK

PERMIT SET - FOR CONSTRUCTION

© 2022 STARBUCKS COFFEE COMPANY

STARBUCKS COFFEE COMPANY
2401 UTAH AVENUE SOUTH
SEATTLE, WASHINGTON 98134
(206) 318-1575

THESE DRAWINGS AND PROJECT MANUAL ARE CONFIDENTIAL AND SHALL REMAIN THE SOLE PROPERTY OF STARBUCKS CORPORATION, WHICH IS THE OWNER OF THE COPYRIGHT IN THIS WORK. THEY SHALL NOT BE REPRODUCED (IN WHOLE OR IN PART), SHARED WITH THIRD PARTIES OR USED IN ANY MANNER ON OTHER PROJECTS OR EXTENSIONS TO THIS PROJECT WITHOUT THE PRIOR WRITTEN CONSENT OF STARBUCKS CORPORATION. THESE DRAWINGS AND SPECIFICATIONS ARE INTENDED TO EXPRESS DESIGN INTENT FOR A PROTOTYPICAL STARBUCKS STORE (WHICH IS SUBJECT TO CHANGE AT ANYTIME) AND DO NOT REFLECT ACTUAL SITE CONDITIONS. NEITHER PARTY SHALL HAVE ANY OBLIGATION NOR LIABILITY TO THE OTHER (EXCEPT STATED ABOVE) UNTIL A WRITTEN AGREEMENT IS FULLY EXECUTED BY BOTH PARTIES.

STARBUCKS TEMPLATE VERSION i2022.10.23

Gensler
MAIN OFFICE
M. ARTHUR GENSLER JR. & ASSOCIATES
PL QUALIFIER'S LIC. NO. AR96486
45 FREMONT ST, SUITE 1500
SAN FRANCISCO, CA 94105 USA
Tel (415) 433.3700
Fax (415) 836.4599
SATELLITE OFFICE
10 NORTH PARK PLACE
SUITE 400
MORRISTOWN, NJ 07960 USA
Tel (973) 290.8500

PROJECT NAME:
ST LUCIE WEST & SW CASHEMERE BLVD

PROJECT ADDRESS:
920 SW SAINT LUCIE BLVD,
PORT ST.LUCIE, FL 34986

STORE #:	81616
PROJECT #:	101357-001
ISSUE DATE:	06-27-2025
STORE DESIGNER:	ASHLEY SUEIRAS
DESIGN MANAGER:	GENSLER
ENGINEER OF RECORD:	KLH ENGINEERS

Revision Schedule

Rev	Date	By	Description

SHEET TITLE:
PLUMBING DETAILS

SCALE: AS SHOWN

SHEET NUMBER:
P502

9/17/2025 12:15:20 PM 27472.00-23-MEP-SBX- Port St. St. Lucie, FL_detached.rvt

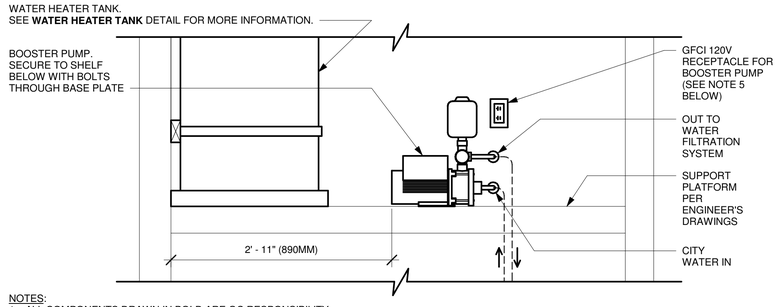

NOTES:
1. ALL COMPONENTS DRAWN IN BOLD ARE GC RESPONSIBILITY.
2. ALL PIPING SHALL BE COPPER EXCEPT PEX TYPE PIPING WHICH IS ACCEPTABLE BETWEEN FILTER SYSTEM COMPONENTS AND ADVANSYS DISHWASHER WHERE ALLOWED BY CODE.
3. POSITION BOOSTER PUMP SO THAT PRESSURE GAUGE IS READABLE AND ACCESSIBLE FOR TROUBLESHOOTING AND MAINTENANCE.
4. BOOSTER PUMP STATIC AND DYNAMIC OUTLET PRESSURE SHALL BE BETWEEN 65 TO 70 PSI. VERIFY PER PUMPS INTEGRAL PRESSURE GAUGE.
5. COORDINATE WITH ELECTRICAL CONTRACTOR FOR RECEPTACLES. SEE ELECTRICAL DETAILS FOR LOCATIONS.
6. ENSURE ALL PENETRATIONS THROUGH SURROUNDING WALLS AND CEILING ARE COMPLETELY SEALED.
7. PROVIDE VIBRATION DAMPENING AT BOOSTER PUMP MOUNT TO PLATFORM.

1 BOOSTER PUMP - PLUMBING
1" = 1'-0"

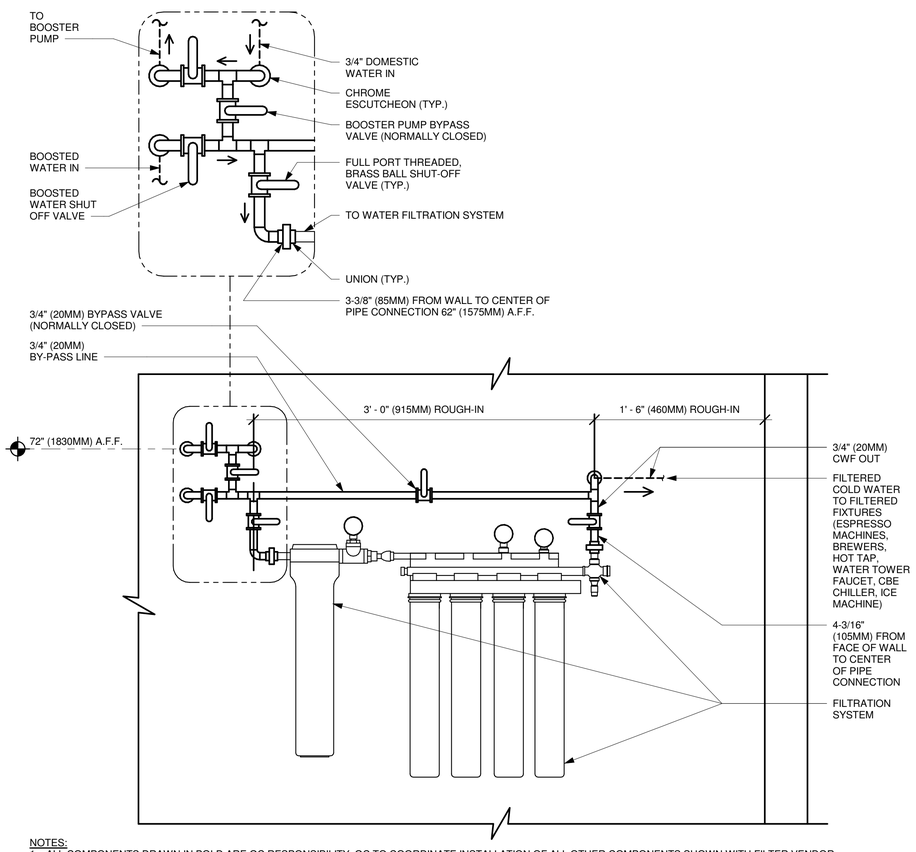

NOTES:
1. ALL COMPONENTS DRAWN IN BOLD ARE GC RESPONSIBILITY. GC TO COORDINATE INSTALLATION OF ALL OTHER COMPONENTS SHOWN WITH FILTER VENDOR.
2. ALL PIPING SHALL BE COPPER EXCEPT PEX TYPE PIPING WHICH IS ACCEPTABLE BETWEEN FILTER SYSTEM COMPONENTS WHERE ALLOWED BY CODE.
3. COMPONENTS ARE TO BE POSITIONED TO MAXIMIZE ACCESS FOR REGULAR SERVICING. PRE-FILTER, BYPASS VALVES, AND SOFTENER TANKS MUST BE INSTALLED 72" (1830MM) A.F.F. OR LOWER.

2 CONFIGURATION I, BASE WATER FILTRATION
1 1/2" = 1'-0"

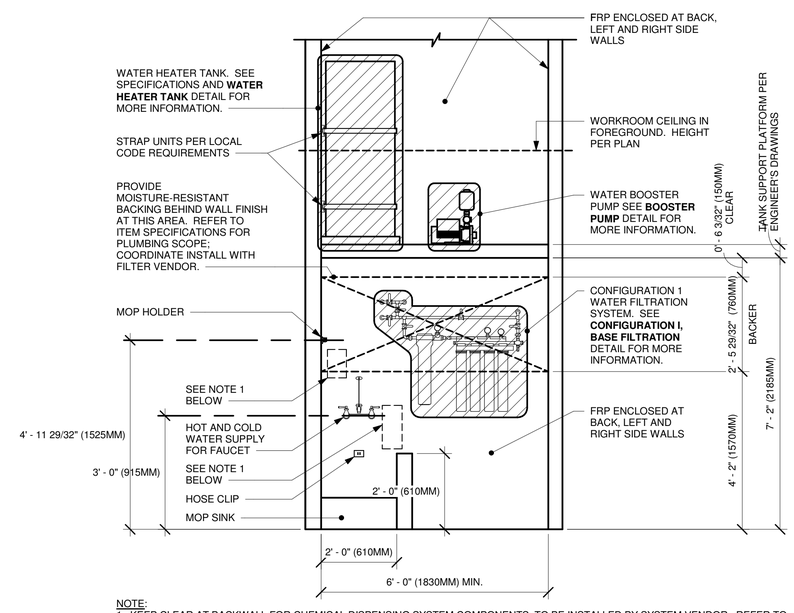

NOTE:
1. KEEP CLEAR AT BACKWALL FOR CHEMICAL DISPENSING SYSTEM COMPONENTS, TO BE INSTALLED BY SYSTEM VENDOR. REFER TO POSTED INSTALLATION GUIDELINES FOR MORE INFORMATION.

3 CONFIGURATION I
1/2" = 1'-0"

KLH ENGINEERS
MECHANICAL/ELECTRICAL ENGINEERS
WWW.KLHENGRS.COM
KOHRS LONNEMANN HEIL ENGINEERS, INC.
444 SOUTH FRONT STREET
COLUMBUS, OHIO 43215
800-354-9783 614-228-2180
614-228-2183 FAX
FORT THOMAS, KENTUCKY
LEXINGTON, KENTUCKY
LOUISVILLE, KENTUCKY
NEW YORK, NEW YORK

PERMIT SET - FOR CONSTRUCTION

© 2022 STARBUCKS COFFEE COMPANY

STARBUCKS COFFEE COMPANY
2401 UTAH AVENUE SOUTH
SEATTLE, WASHINGTON 98134
(206) 318-1575

THESE DRAWINGS AND PROJECT MANUAL ARE CONFIDENTIAL AND SHALL REMAIN THE SOLE PROPERTY OF STARBUCKS CORPORATION, WHICH IS THE OWNER OF THE COPYRIGHT IN THIS WORK. THEY SHALL NOT BE REPRODUCED (IN WHOLE OR IN PART), SHARED WITH THIRD PARTIES OR USED IN ANY MANNER ON OTHER PROJECTS OR EXTENSIONS TO THIS PROJECT WITHOUT THE PRIOR WRITTEN CONSENT OF STARBUCKS CORPORATION. THESE DRAWINGS AND SPECIFICATIONS ARE INTENDED TO EXPRESS DESIGN INTENT FOR A PROTOTYPICAL STARBUCKS STORE (WHICH IS SUBJECT TO CHANGE AT ANYTIME) AND DO NOT REFLECT ACTUAL SITE CONDITIONS. NEITHER PARTY SHALL HAVE ANY OBLIGATION NOR LIABILITY TO THE OTHER (EXCEPT STATED ABOVE) UNTIL A WRITTEN AGREEMENT IS FULLY EXECUTED BY BOTH PARTIES.

STARBUCKS TEMPLATE VERSION i2022.10.23

Gensler
MAIN OFFICE
M. ARTHUR GENSLER JR. & ASSOCIATES
FL QUALIFIER'S LIC. NO. AR96486
45 FREMONT ST, SUITE 1500
SAN FRANCISCO, CA 94105 USA
Tel (415) 433.3700
Fax (415) 836.4599
SATELLITE OFFICE
10 NORTH PARK PLACE
SUITE 400
MORRISTOWN, NJ 07960 USA
Tel (973) 290.8500

PROJECT NAME:
ST LUCIE WEST & SW
CASHEMERE BLVD

PROJECT ADDRESS:
920 SW SAINT LUCIE BLVD,
PORT ST.LUCIE, FL 34986

STORE #:	81616
PROJECT #:	101357-001
ISSUE DATE:	06-27-2025
STORE DESIGNER:	ASHLEY SUEIRAS
DESIGN MANAGER:	GENSLER
ENGINEER OF RECORD:	KLH ENGINEERS

Revision Schedule

Rev	Date	By	Description

SHEET TITLE:
PLUMBING DETAILS

SCALE: AS SHOWN

SHEET NUMBER:
P503

9/17/2025 12:15:21 PM 27472.00-23-MEP-SBX- Port St. St. Lucie, FL_detached.rvt

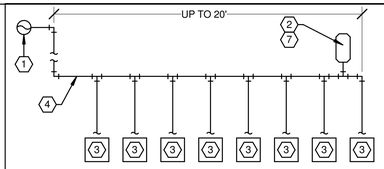

MULTI-PLUMBING FIXTURES BRANCH LINES LESS THAN 20' IN LENGTH

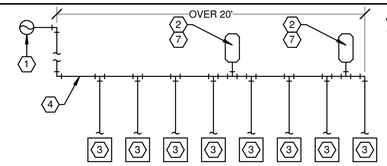

MULTI-PLUMBING FIXTURES BRANCH LINES MORE THAN 20' IN LENGTH

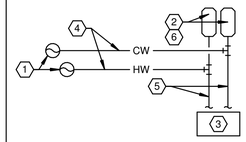

INDIVIDUAL PLUMBING FIXTURE BRANCH LINE

WATER HAMMER ARRESTOR UNIT SIZE CHART

UNIT SIZE	WATER SUPPLY FIXTURE UNITS
A	(1-11) WSFUs
B	(12-32) WSFUs
C	(33-60) WSFUs
D	(61-113) WSFUs
E	(114-154) WSFUs
F	(155-330) WSFUs

FIXTURE	TYPE OF SUPPLY CONTROL	WEIGHT IN WSFUs					
		PUBLIC			PRIVATE		
		TOTAL	CW	HW	TOTAL	CW	HW
WATER CLOSET	FLUSH VALVE	8	8	-	5	5	-
WATER CLOSET	FLUSH TANK	5	5	-	2.5	2.5	-
URINAL	FLUSH VALVE	4	4	-	-	-	-
URINAL	FLUSH TANK	2	2	-	-	-	-
LAVATORY	FAUCET	2	1.5	1.5	1	1	1
BATHTUB	FAUCET	4	2	3	2	1.5	1.5
SHOWER HEAD	MIXING VALVE	4	2	3	2	1	2
BATHROOM GROUP	FLUSH VALVE CLOSET	-	-	-	8	8	3
BATHROOM GROUP	FLUSH TANK CLOSET	-	-	-	6	6	3
SEPARATE SHOWER	MIXING VALVE	-	-	-	2	1	2
SERVICE SINK	FAUCET	3	3	3	-	-	-
LAUNDRY TUBS (1-3)	FAUCET	-	-	-	3	3	3
COMBINATION FIXT.	FAUCET	-	-	-	3	3	3

221319.00-07 - WATER HAMMER ARRESTOR DETAIL

SCALE: NONE

KEYED NOTES:

1. HORIZONTAL OR VERTICAL HOT OR COLD WATER MAIN.
2. WATER HAMMER ARRESTOR.
3. PLUMBING FIXTURE.
4. HORIZONTAL HOT WATER OR COLD WATER BRANCH PIPING.
5. VERTICAL HOT WATER OR COLD WATER BRANCH PIPING.
6. LOCATE AT EACH WATER BRANCH PIPE SERVING A SINGLE PLUMBING FIXTURE OR PLUMBING EQUIPMENT.
7. SUM OF WSFU RATING OF WATER HAMMER ARRESTOR(S) SHALL BE EQUAL TO OR GREATER THAN THE DEMAND OF THE BRANCHES.

GENERAL NOTE:

A. PROVIDED WATER HAMMER ARRESTORS SHALL BE ASSE 1010 RATED OR PDI-WH 201 COMPLIANT.
B. SCOPE OF THIS DETAIL SHALL BE APPLICABLE TO ALL PLUMBING FIXTURES AND EQUIPMENT THAT HAVE QUICK CLOSING VALVES. THIS SHALL INCLUDE BUT NOT BE LIMITED TO FLUSH VALVES, BEVERAGE DISPENSING EQUIPMENT, ICE MAKERS, AND WASHERS.
C. ALL POSSIBLE CONDITIONS AND INSTALLATION SCENARIOS NOT REPRESENTED, WATER HAMMER ARRESTORS SHALL BE INSTALLED IN WATER PIPING IN ACCORDANCE WITH PDI-WH 201 AS THIS DETAIL IS PROVIDED FOR DESIGN INTENT.
D. WHERE SUPPLY BOXES HAVE INTEGRAL WATER HAMMER ARRESTORS, SEPARATE PIPE INSTALLED WATER HAMMER ARRESTORS SHALL NOT BE REQUIRED FOR THE APPLICABLE PIECE OF EQUIPMENT SUPPLIED FROM THE SUPPLY BOX.
E. WHERE REQUIRED BY APPLICABLE PLUMBING CODE, WATER HAMMER ARRESTORS SHALL BE INSTALLED IN ACCESSIBLE LOCATIONS.

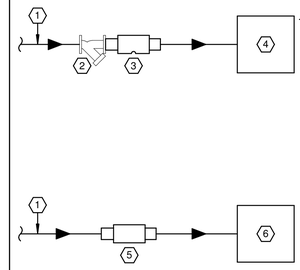

KEYED NOTES:

1. DOMESTIC WATER SUPPLY.
2. STRAINER.
3. ASSE 1022 RATED BACKFLOW PREVENTER FOR BEVERAGE DISPENSING EQUIPMENT EQUAL TO WATTS SD-3. CONNECT WASTE PIPE TO VENT OPENING AND DRAIN INDIRECT TO ADJACENT FLOOR DRAIN/SINK.
4. COFFEE BREWER, ESPRESSO MACHINE, TEA BREWER, JUICE DISPENSER.
5. ASSE 1032 RATED DUAL CHECK BACKFLOW PREVENTER FOR CARBONATED BEVERAGE DISPENSERS, POST MIX TYPE, AND NON-CARBONATED BEVERAGE DISPENSERS EQUAL TO WATTS SD-2.
6. CARBONATED BEVERAGE DISPENSER, NON-CARBONATED BEVERAGE DISPENSER, POST MIX TYPE BEVERAGE DISPENSER.

GENERAL NOTES:

A. DIAGRAM IS SCHEMATIC. BACKFLOW PREVENTERS SHALL BE INSTALLED IN COMPLIANCE WITH MANUFACTURER'S REQUIREMENTS AND ONLY IN INSTALLATION ORIENTATIONS PERMITTED BY MANUFACTURER.
B. BACKFLOW PREVENTERS SHALL BE INSTALLED WITH READY ACCESS. CONCEALMENT IS NOT PERMITTED. WHERE A SUPPLY BOX IS INDICATED, BACKFLOW PREVENTER SHALL BE INSTALLED IN BETWEEN SUPPLY BOX OUTLET AND FINAL EQUIPMENT CONNECTION.

221113.00-04 - BEVERAGE EQUIPMENT BACKFLOW PREVENTER DETAIL

SCALE: NONE

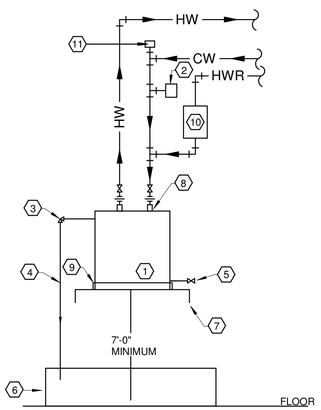

KEYED NOTES:

1. ELECTRIC WATER HEATER.
2. 4.4 GALLON EXPANSION TANK.
3. ASME APPROVED TEMPERATURE AND PRESSURE RELIEF VALVE, 210°F, 100 PSI.
4. RELIEF PIPE, FULL SIZE OF DISCHARGE OPENING.
5. DRAIN VALVE.
6. MOP SINK.
7. MOUNT ON BRACKETS OR SUSPEND FROM JOISTS ABOVE.
8. HEAT TRAP/DIELECTRIC NIPPLE (TYPICAL).
9. GALVANIZED DRIP PAN WITH DRAIN.
10. RECIRCULATION PUMP. REFER TO ADDITIONAL DETAIL.
11. VACUUM RELIEF VALVE.

223300.00-01 - SHELF-MOUNTED ELECTRIC WATER HEATER

SCALE: NONE

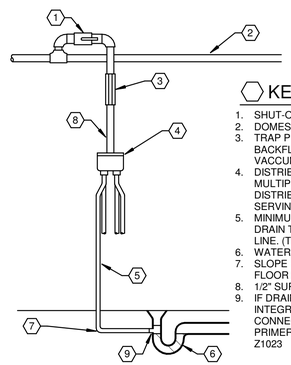

KEYED NOTES:

1. SHUT-OFF VALVE.
2. DOMESTIC COLD WATER LINE.
3. TRAP PRIMER VALVE WITH BACKFLOW PREVENTER AND VACCUM BREAK.
4. DISTRIBUTION UNIT FOR MULTIPLE FLOOR DRAINS. (OMIT DISTRIBUTION UNIT WHEN SERVING SINGLE DRAIN.)
5. MINIMUM 1/2" COPPER FLOOR DRAIN TRAP MAKE-UP WATER LINE. (TYPICAL)
6. WATER SEAL.
7. SLOPE PIPING BELOW SLAB TO FLOOR DRAIN.
8. 1/2" SUPPLY SIZE.
9. IF DRAIN DOES NOT HAVE INTEGRAL TRAP PRIMER CONNECTION, PROVIDE TRAP PRIMER FITTING EQUAL TO ZURN Z1023

NOTE: TRAP PRIMER LINE SHALL NOT EXCEED 20 FT.

221119.00-07 - TRAP PRIMER DETAIL

SCALE: NONE

KEYED NOTES:

1. HANGER ROD.
2. GALVANIZED STEEL PIPE SHIELD AND 360° CALCIUM SILICATE INSULATION HANGER SUPPORT.
3. PIPE INSULATION.
4. PIPE.
5. UNISTRUT CHANNEL.
6. CLEVIS HANGER.
7. TRAPEZE PIPE HANGER.

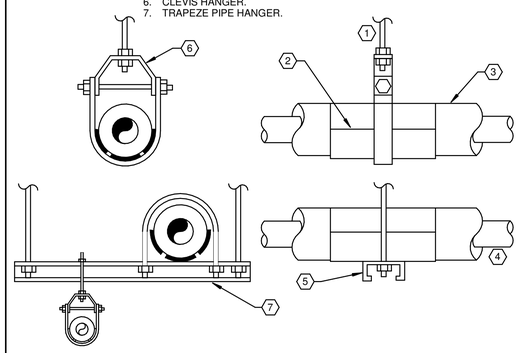

220529.00-01 - PLUMBING PIPE HANGER INSTALLATION

SCALE: NONE

GENERAL NOTES:

A. PROVIDE CARPET MARKER WHERE CARPET OCCURS

KEYED NOTES:

1. CLEANOUT WITH COVER FOR DUTY REQUIRED
2. BUILDING DRAIN OR SEWER MATERIAL AND SIZE AS SPECIFIED
3. FINISHED FLOOR.
4. EXTENSION - SAME SIZE AS SEWER UP TO 4" DIAMETER.
5. COMBINATION WYE & 1/8" BEND (USE REDUCING TYPE WHERE REQUIRED).

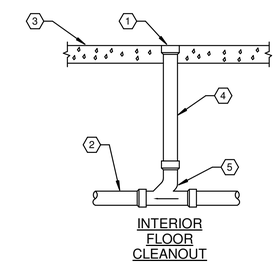

INTERIOR FLOOR CLEANOUT

221316.00-07 - FLOOR CLEANOUTS

SCALE: NONE

KEYED NOTES:

1. DRAIN WATER TEMPERING VALVE.
2. APPROVED BACKFLOW PREVENTION DEVICE.
3. HIGH TEMPERATURE EFFLUENT (> 140 F)
4. COLD WATER SUPPLY LINE.
5. DISHWASHER.
6. FLOOR SINK.

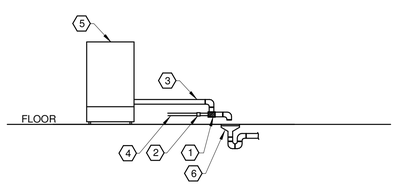

DRAIN WATER TEMPERING VALVE INSTALLATION DETAIL

SCALE: NONE

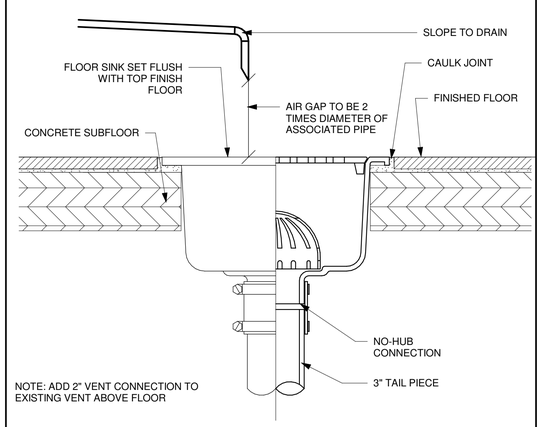

NOTE: ADD 2" VENT CONNECTION TO EXISTING VENT ABOVE FLOOR

FLOOR SINK DETAIL

SCALE: NONE

KEYED NOTES:

1. AQUASTAT WIRED TO START CIRCULATING PUMP WHEN LINE WATER TEMPERATURE DROPS 10°F BELOW DESIRED HOTWATER LOOP TEMPERATURE. AQUASTAT/THERMAL WELL SHALL HAVE ADJUSTABLE TEMPERATURE RANGE OF 50°F-160°F.
2. TEMPERATURE GAUGE AND SNUBBER. **CRITICAL TO INSTALLATION**.
3. BALL VALVE (TYPICAL).
4. WYE STRAINER
5. HOT WATER RECIRCULATION PUMP.
6. PRESSURE GAUGE AND SNUBBER (TYPICAL) **CRITICAL TO INSTALLATION**.
7. UNION (TYPICAL).
8. CHECK VALVE.
9. BALANCING VALVE.
10. RETURN LINE TO HOT WATER SUPPLY SYSTEM.

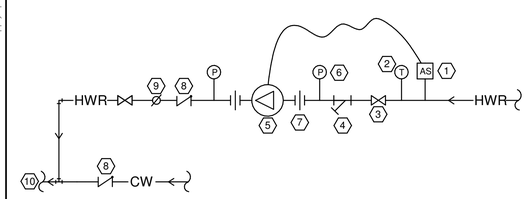

221123.00-01 - HOT WATER RECIRCULATION PUMP

SCALE: NONE

KLH ENGINEERS

MECHANICAL/ELECTRICAL ENGINEERS

WWW.KLHENGRS.COM

KOHRS LONNEMANN HEIL ENGINEERS, INC.

444 SOUTH FRONT STREET
COLUMBUS, OHIO 43215
800-354-9783 614-228-2180
614-228-2183 FAX

FORT THOMAS, KENTUCKY
LEXINGTON, KENTUCKY
LOUISVILLE, KENTUCKY
NEW YORK, NEW YORK

PERMIT SET - FOR CONSTRUCTION

© 2022 STARBUCKS COFFEE COMPANY

STARBUCKS COFFEE COMPANY
2401 UTAH AVENUE SOUTH
SEATTLE, WASHINGTON 98134
(206) 318-1575

THESE DRAWINGS AND PROJECT MANUAL ARE CONFIDENTIAL AND SHALL REMAIN THE SOLE PROPERTY OF STARBUCKS CORPORATION, WHICH IS THE OWNER OF THE COPYRIGHT IN THIS WORK. THEY SHALL NOT BE REPRODUCED (IN WHOLE OR IN PART), SHARED WITH THIRD PARTIES OR USED IN ANY MANNER ON OTHER PROJECTS OR EXTENSIONS TO THIS PROJECT WITHOUT THE PRIOR WRITTEN CONSENT OF STARBUCKS CORPORATION. THESE DRAWINGS AND SPECIFICATIONS ARE INTENDED TO EXPRESS DESIGN INTENT FOR A PROTOTYPICAL STARBUCKS STORE (WHICH IS SUBJECT TO CHANGE AT ANYTIME) AND DO NOT REFLECT ACTUAL SITE CONDITIONS. NEITHER PARTY SHALL HAVE ANY OBLIGATION NOR LIABILITY TO THE OTHER (EXCEPT STATED ABOVE) UNTIL A WRITTEN AGREEMENT IS FULLY EXECUTED BY BOTH PARTIES.

STARBUCKS TEMPLATE VERSION i2022.10.23

Gensler

MAIN OFFICE
M. ARTHUR GENSLER JR. & ASSOCIATES
FL QUALIFIER'S LIC. NO. AR96486
45 FREMONT ST, SUITE 1500
SAN FRANCISCO, CA 94105 USA
Tel (415) 433.3700
Fax (415) 836.4599

SATELLITE OFFICE
10 NORTH PARK PLACE
SUITE 400
MORRISTOWN, NJ 07960 USA
Tel (973) 290.8500

PROJECT NAME:
ST LUCIE WEST & SW CASHEMERE BLVD

PROJECT ADDRESS:
920 SW SAINT LUCIE BLVD,
PORT ST.LUCIE, FL 34986

STORE #: 81616
PROJECT #: 101357-001
ISSUE DATE: 06-27-2025
STORE DESIGNER: ASHLEY SUEIRAS
DESIGN MANAGER: GENSLER
ENGINEER OF RECORD: KLH ENGINEERS

Revision Schedule

Rev	Date	By	Description

SHEET TITLE:
PLUMBING DETAILS

SCALE: AS SHOWN

SHEET NUMBER:
P505

9/17/2025 12:15:24 PM 27472.00-23-MEP-SBX- Port St. St. Lucie, FL_detached.rvt

TANK TYPE ELECTRIC WATER HEATER SCHEDULE

PRODUCT						MISC		GENERAL		ELECTRICAL		DESIGN CONDITIONS		ELECTRICAL																PRODUCT
MARK	DESCRIPTION	MANUFACTURER	MODEL	OPERATING WEIGHT (LBS)	SECTION NUMBER	STORAGE VOLUME (GAL(INP))	ACCESSORIES	LOCATION	STATUS	EFFICIENCY	EWT	LWT	CONNECTION MARK	ELECTRIC CONNECTION SUMMARY	CH TYPE	CH FURNISHED BY	CH INSTALLED BY	CH WIRED BY	MC TYPE	MC FURNISHED BY	MC INSTALLED BY	MC WIRED BY	DC TYPE	DC FURNISHED	DC INSTALLED BY	DC WIRED BY	REQUIRED TO MEET FAULT CURRENT	FAULT CURRENT	EMERGENCY	MARK
22225	TANK TYPE ELECTRIC WATER HEATER	BRADFORD WHITE	E32-505-3	554	22 33 00.00	50	REFER TO DETAILING AND SBX MASTER PRODUCTS FOR MORE INFORMATION. PLUMBING CONTRACTOR TO FURNISH AND INSTALL.	BACK OF HOUSE	NEW	99	40	140	22225	22225 - 208V/3PH, 15KW HTG, 41.6A FLA	INT	MFR	MFR	MFR	--	--	--	--	--	EC	EC	EC	FALSE	22225: 7657	FALSE	22225

PLUMBING CONTRACTOR TO FURNISH AND INSTALL

DOMESTIC WATER BOOSTER PUMP SCHEDULE

PRODUCT						GENERAL					MISC	FLOW INFORMATION		ELECTRICAL																PRODUCT
MARK	DESCRIPTION	MANUFACTURER	MODEL	OPERATING WEIGHT (LBS)	SECTION NUMBER	ENTERING PSIG (PSIG)	LEAVING PSIG (PSIG)	FUEL	LOCATION	STATUS	ACCESSORIES	FLUID FLOW	PUMP HEAD (FEETOFHEAD)	CONNECTION MARK	ELECTRIC CONNECTION SUMMARY	CH TYPE	CH FURNISHED BY	CH INSTALLED BY	CH WIRED BY	MC TYPE	MC FURNISHED BY	MC INSTALLED BY	MC WIRED BY	DC TYPE	DC FURNISHED	DC INSTALLED BY	DC WIRED BY	REQUIRED TO MEET FAULT CURRENT	FAULT CURRENT	EMERGENCY	MARK
23355	DOMESTIC WATER BOOSTER PUMP	GRUNDFOS	CMBE 1-75 I-X-C-B-D-E	39	22 11 23.13	50	74	ELECTRIC	BACK OF HOUSE	NEW	REFER TO SBX MASTER PRODUCTS FOR MORE INFORMATION. PLUMBING CONTRACTOR TO FURNISH AND INSTALL.	5	55	23355	23355 - 120V/1PH, 1.01 HP	INT	MFR	MFR	MFR	VFD	MFR	MFR	MFR	--	EC	EC	EC	FALSE	23355: 4182	FALSE	23355

PLUMBING CONTRACTOR TO FURNISH AND INSTALL

DOMESTIC HOT WATER CIRCULATION PUMP SCHEDULE

PRODUCT						GENERAL				MISC	FLOW INFORMATION		ELECTRICAL																PRODUCT
MARK	DESCRIPTION	MANUFACTURER	MODEL	OPERATING WEIGHT (LBS)	SECTION NUMBER	ENTERING PSIG (PSIG)	LEAVING PSIG (PSIG)	LOCATION	STATUS	ACCESSORIES	FLUID FLOW	PUMP HEAD (FEETOFHEAD)	CONNECTION MARK	ELECTRIC CONNECTION SUMMARY	CH TYPE	CH FURNISHED BY	CH INSTALLED BY	CH WIRED BY	MC TYPE	MC FURNISHED BY	MC INSTALLED BY	MC WIRED BY	DC TYPE	DC FURNISHED	DC INSTALLED BY	DC WIRED BY	REQUIRED TO MEET FAULT CURRENT	FAULT CURRENT	EMERGENCY	MARK
CP1	DOMESTIC HOT WATER CIRCULATION PUMP	TACO	007SF5	4	22 11 23.00	50	54.33	BACK OF HOUSE	NEW	LEAD FREE. CONTROLLED VIA TIMECLOCK AND AQUASTAT. PLUMBING CONTRACTOR TO FURNISH AND INSTALL.	2	10	CP1	CP1 - 120V/1PH, 0.04 HP, 0.76A FLA	LINE	PC	PC	EC	MG	MFR	MFR	MFR	--	EC	EC	EC	FALSE	CP1: 2575	FALSE	CP1

PLUMBING CONTRACTOR TO FURNISH AND INSTALL

POINT-OF-USE THERMOSTATIC MIXING VALVE SCHEDULE

PRODUCT					GENERAL		MISC	DESIGN CONDITIONS
MARK	DESCRIPTION	MANUFACTURER	MODEL	SECTION NUMBER	LOCATION	STATUS	ACCESSORIES	LWT
TMV	POINT-OF-USE THERMOSTATIC MIXING VALVE	POWERS	LFG480	22 00 00.00	REFER TO PLAN	NEW	INSTALL PER MANUFACTURER GUIDELINES. ASSE 1070 CERTIFIED. PLUMBING CONTRACTOR TO FURNISH AND INSTALL.	105

PLUMBING CONTRACTOR TO FURNISH AND INSTALL

DOMESTIC WATER EXPANSION TANK SCHEDULE

PRODUCT					MISC		GENERAL	
MARK	DESCRIPTION	MANUFACTURER	MODEL	SECTION NUMBER	STORAGE VOLUME (GAL(INP))	ACCESSORIES	LOCATION	STATUS
ET1	DOMESTIC WATER EXPANSION TANK	AMTROL	ST-12	22 00 00.00	4.4	INSTALL PER MANUFACTURER GUIDELINES. PLUMBING CONTRACTOR TO FURNISH AND INSTALL.	BACK OF HOUSE	NEW

PLUMBING CONTRACTOR TO FURNISH AND INSTALL

DRAIN TEMPERING VALVE SCHEDULE

PRODUCT					GENERAL		MISC
MARK	DESCRIPTION	MANUFACTURER	MODEL	SECTION NUMBER	LOCATION	STATUS	ACCESSORIES
DTV	DRAIN TEMPERING VALVE	THERMOMEGATECH	326-1000000	22 00 00.00	DISH WASHER	NEW	INSTALL PER MANUFACTURER GUIDELINES. PLUMBING CONTRACTOR TO FURNISH AND INSTALL.

PLUMBING CONTRACTOR TO FURNISH AND INSTALL

PLUMBING FIXTURE SCHEDULE - "P"

DESIGN ID	COUNT	DESCRIPTION	FURN. BY	INST. BY	COMMENTS
DRAIN					
10294	7	DRAIN - FLOOR SINK SQUARE - 12IN 305MM	SB	GC	
10594	3	DRAIN - FLOOR SINK SQUARE - 5IN 125MM	GC	GC	5" FLOOR DRAIN; MANUFACTURER: ZURN; MODEL: Z41B
10726	7	DRAIN - GRATE HALF SQUARE - 12IN 305MM	SB	GC	
X0701	2	DRAIN - FLOOR DRAIN ROUND - 5IN 305MM	GC	GC	
FAUCET					
10152	1	FAUCET - DOUBLE LABORATORY WITH BENT RISER SPOUT	SB	GC	
10153	4	FAUCET - WATER TOWER - 12IN 305MM	SB	GC	
10215	2	FAUCET - DOUBLE LABORATORY WITH SWING SPOUT	SB	GC	
10447	1	FAUCET - PRE RINSE SPRAYER WALL MOUNTED	SB	GC	
10597	2	FAUCET - SINGLE HANDLE	SB	GC	
10804	1	FAUCET - PRE RINSE SWING SPOUT	SB	GC	
10922	1	FAUCET - MOP SINK WALL MOUNTED	SB	GC	
10943	1	FAUCET - SINGLE LABORATORY WITH SWING SPOUT	SB	GC	
11003	2	FAUCET - METERED	SB	GC	
13588	1	FAUCET - HAND SINK WALL MOUNTED	SB	GC	
21352	2	FAUCET - RESTROOM WITH MOTION SENSOR	SB	GC	
22642	3	FAUCET - INSTANTHOT SYSTEM 2 BUTTON WITH BOILER AND BRACKET	SB	GC	KIT INCLUDES FONT, UNDERCOUNTER BOILER AND BOILER BRACKET FOR SIDE PANEL MOUNTING. BRACKET CAN BE FLOOR MOUNTED USING SET OF (4) STAINLESS STEEL LEGS, ORDERED SEPARATELY THROUGH VENDOR.
FILTER					
13076	1	FILTER - PREFILTRATION SYSTEM	SB	SB	GC TO COORDINATE WITH SB VENDOR
13080	1	FILTER - HEAD QUAD	SB	SB	GC TO COORDINATE WITH SB VENDOR
13081	4	FILTER - CARBON FILTER CARTRIDGE	SB	SB	GC TO COORDINATE WITH SB VENDOR
23355	1	FILTER - FILTRATION BOOSTER PUMP	SB	SB	GC TO COORDINATE WITH SB VENDOR
OTHER					
11109	1	WATER HEATER TANK ELECTRIC	GC	GC	
SINK					
10116	2	SINK - RESTROOM WALL MOUNTED	SB	GC	
10549	1	SINK - RINSE DROP IN SST - 12X20IN 305X510MM	SB	GC	
10995	1	SINK - MOP - 24X24IN 610X610MM	SB	GC	
13700	1	SINK - 3 COMP WORK SST - 105IN 2665MM	SB	GC	
14688	1	SINK - HAND WITH SIDE SPLASH WALL MOUNTED SST	SB	GC	
18743	1	SINK - WATER FILLING STATION - 36X24IN 915X610MM	SB	GC	
22630	1	SINK - RINSE DROP IN - 27X26IN 685X670MM	SB	GC	
22768	2	SINK - COUNTERTOP RINSER WITH WATER TOWER - 26X9IN 660X235MM	SB	GC	
TOILET					
22558	2	TOILET - TANKLESS AUTOMATIC SINGLE FLUSH	GC	GC	

RESPONSIBILITY LEGEND

SB-GC	FURNISHED BY STARBUCKS INSTALLED BY GENERAL CONTRACTOR
SB-SB	FURNISHED & INSTALLED BY STARBUCKS
GC-GC	FURNISHED & INSTALLED BY GENERAL CONTRACTOR
LL-LL	FURNISHED & INSTALLED BY LANDLORD

NOTE: ALL RESPONSIBILITIES TO BE CONFIRMED WITH STARBUCKS DESIGN MANAGER PRIOR TO ORDERING/CONSTRUCTION

KLH ENGINEERS

MECHANICAL/ELECTRICAL ENGINEERS

WWW.KLHENGRS.COM

KOHRS LONNEMANN HEIL ENGINEERS, INC.
444 SOUTH FRONT STREET
COLUMBUS, OHIO 43215
800-354-9783 614-228-2180
614-228-2183 FAX

FORT THOMAS, KENTUCKY
LEXINGTON, KENTUCKY
LOUISVILLE, KENTUCKY
NEW YORK, NEW YORK

PERMIT SET - FOR CONSTRUCTION

© 2022 STARBUCKS COFFEE COMPANY

STARBUCKS COFFEE COMPANY
2401 UTAH AVENUE SOUTH
SEATTLE, WASHINGTON 98134
(206) 318-1575

THESE DRAWINGS AND PROJECT MANUAL ARE CONFIDENTIAL AND SHALL REMAIN THE SOLE PROPERTY OF STARBUCKS CORPORATION, WHICH IS THE OWNER OF THE COPYRIGHT IN THIS WORK. THEY SHALL NOT BE REPRODUCED (IN WHOLE OR IN PART), SHARED WITH THIRD PARTIES OR USED IN ANY MANNER ON OTHER PROJECTS OR EXTENSIONS TO THIS PROJECT WITHOUT THE PRIOR WRITTEN CONSENT OF STARBUCKS CORPORATION. THESE DRAWINGS AND SPECIFICATIONS ARE INTENDED TO EXPRESS DESIGN INTENT FOR A PROTOTYPICAL STARBUCKS STORE (WHICH IS SUBJECT TO CHANGE AT ANYTIME) AND DO NOT REFLECT ACTUAL SITE CONDITIONS. NEITHER PARTY SHALL HAVE ANY OBLIGATION NOR LIABILITY TO THE OTHER (EXCEPT STATED ABOVE) UNTIL A WRITTEN AGREEMENT IS FULLY EXECUTED BY BOTH PARTIES.

STARBUCKS TEMPLATE VERSION |2022.10.23

Gensler

MAIN OFFICE
M. ARTHUR GENSLER JR. & ASSOCIATES
FL QUALIFIER'S LIC. NO. AR96486
45 FREMONT ST, SUITE 1500
SAN FRANCISCO, CA 94105 USA
Tel (415) 433.3700
Fax (415) 836.4599

SATELLITE OFFICE
10 NORTH PARK PLACE
SUITE 400
MORRISTOWN, NJ 07960 USA
Tel (973) 290.8500

PROJECT NAME:
ST LUCIE WEST & SW CASHEMERE BLVD

PROJECT ADDRESS:
920 SW SAINT LUCIE BLVD,
PORT ST.LUCIE, FL 34986

STORE #: 81616
PROJECT #: 101357-001
ISSUE DATE: 06-27-2025
STORE DESIGNER: ASHLEY SUEIRAS
DESIGN MANAGER: GENSLER
ENGINEER OF RECORD: KLH ENGINEERS

Revision Schedule

Rev	Date	By	Description

SHEET TITLE:
PLUMBING SCHEDULES

SCALE: AS SHOWN

SHEET NUMBER:
P601

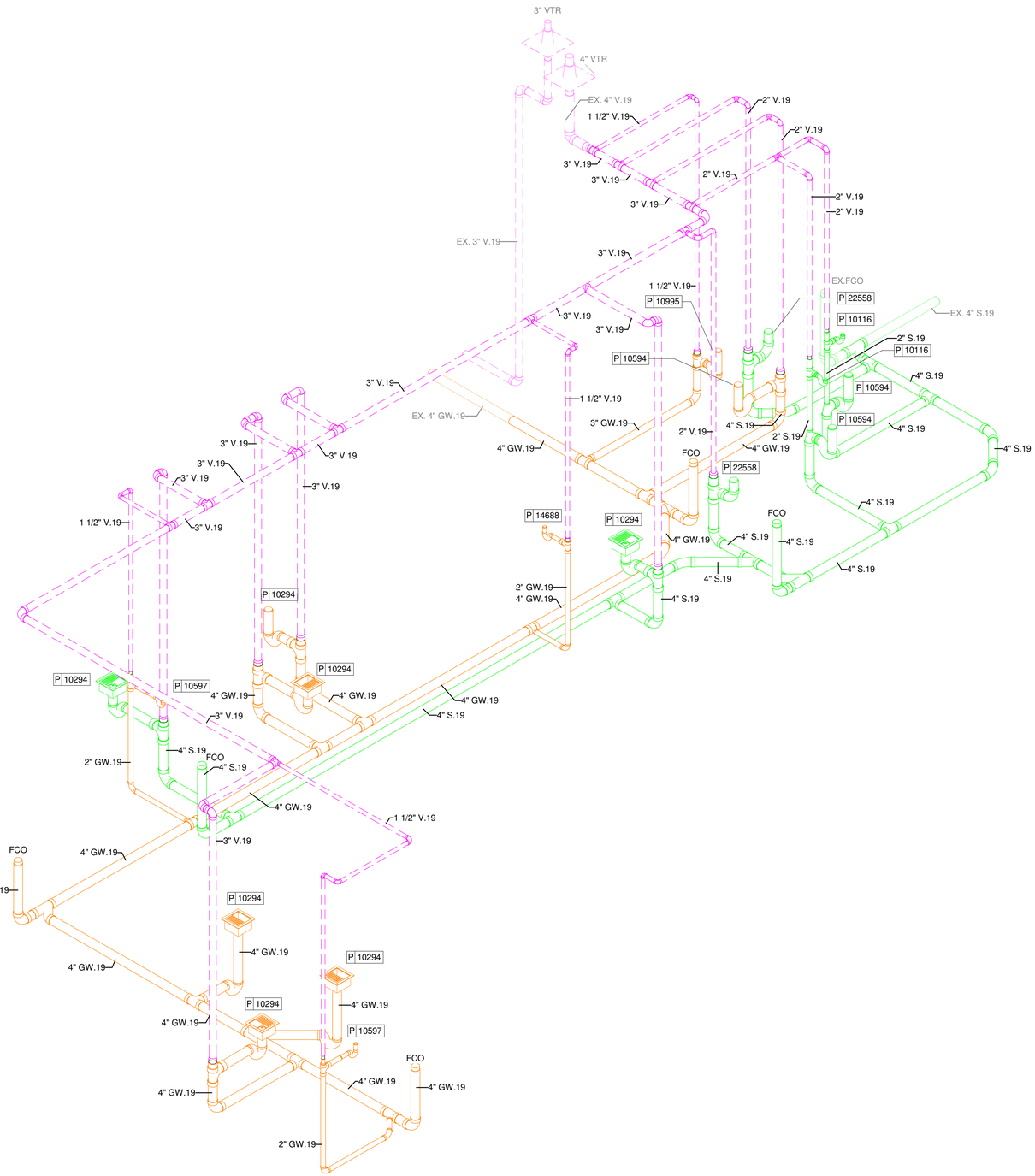

PLUMBING PIPING LEGEND

- SANITARY WASTE PIPING
- GREASE WASTE PIPING
- VENT PIPING

② WASTE AND VENT ISOMETRIC

KLH ENGINEERS

MECHANICAL/ELECTRICAL ENGINEERS

WWW.KLHENGRS.COM

KOHRS LONNEMANN HEIL ENGINEERS, INC.

444 SOUTH FRONT STREET
COLUMBUS, OHIO 43215
800-354-9783 614-228-2180
614-228-2183 FAX

FORT THOMAS, KENTUCKY
LEXINGTON, KENTUCKY
LOUISVILLE, KENTUCKY
NEW YORK, NEW YORK

PERMIT SET - FOR CONSTRUCTION

© 2022 STARBUCKS COFFEE COMPANY

STARBUCKS COFFEE COMPANY
2401 UTAH AVENUE SOUTH
SEATTLE, WASHINGTON 98134
(206) 318-1575

THESE DRAWINGS AND PROJECT MANUAL ARE CONFIDENTIAL AND SHALL REMAIN THE SOLE PROPERTY OF STARBUCKS CORPORATION, WHICH IS THE OWNER OF THE COPYRIGHT IN THIS WORK. THEY SHALL NOT BE REPRODUCED (IN WHOLE OR IN PART), SHARED WITH THIRD PARTIES OR USED IN ANY MANNER ON OTHER PROJECTS OR EXTENSIONS TO THIS PROJECT WITHOUT THE PRIOR WRITTEN CONSENT OF STARBUCKS CORPORATION. THESE DRAWINGS AND SPECIFICATIONS ARE INTENDED TO EXPRESS DESIGN INTENT FOR A PROTOTYPICAL STARBUCKS STORE (WHICH IS SUBJECT TO CHANGE AT ANYTIME) AND DO NOT REFLECT ACTUAL SITE CONDITIONS. NEITHER PARTY SHALL HAVE ANY OBLIGATION NOR LIABILITY TO THE OTHER (EXCEPT STATED ABOVE) UNTIL A WRITTEN AGREEMENT IS FULLY EXECUTED BY BOTH PARTIES.

STARBUCKS TEMPLATE VERSION i2022.10.23

Gensler

MAIN OFFICE
M. ARTHUR GENSLER JR. & ASSOCIATES
FL QUALIFIER'S LIC. NO. AR96486
45 FREMONT ST, SUITE 1500
SAN FRANCISCO, CA 94105 USA
Tel (415) 433.3700
Fax (415) 836.4599

SATELLITE OFFICE
10 NORTH PARK PLACE
SUITE 400
MORRISTOWN, NJ 07960 USA
Tel (973) 290.8500

PROJECT NAME:
ST LUCIE WEST & SW CASHEMERE BLVD

PROJECT ADDRESS:
920 SW SAINT LUCIE BLVD,
PORT ST.LUCIE, FL 34986

STORE #:	81616
PROJECT #:	101357-001
ISSUE DATE:	06-27-2025
STORE DESIGNER:	ASHLEY SUEIRAS
DESIGN MANAGER:	GENSLER
ENGINEER OF RECORD:	KLH ENGINEERS

Revision Schedule

Rev	Date	By	Description
1	9/4/25		Revision 1

SHEET TITLE:
PLUMBING WASTE AND VENT RISER
SCALE: AS SHOWN

SHEET NUMBER:
P901

9/17/2025 12:15:31 PM 27472.00-23-MEP-SBX- Port St. St. Lucie, FL_detached.rvt

STARBUCKS WATER HAMMER ARRESTOR SCHEDULE

Equipment Mark	Manufacturer	Model	Access
WHA1	WATTS	LF15M2-A	PDI WH201 LISTED.
WHA2	WATTS	LF15M2-B	PDI WH201 LISTED.

STARBUCKS BACKFLOW PREVENTER...

Equipment Mark	Manufacturer	Model	Access
BFP1	WATTS	LF7R	ASSE 1024 RATED

PLUMBING PIPING LEGEND

- DOMESTIC COLD WATER PIPING
- DOMESTIC HOT WATER PIPING (140)
- DOMESTIC HOT WATER RETURN PIPING (140)
- FILTERED WATER PIPING

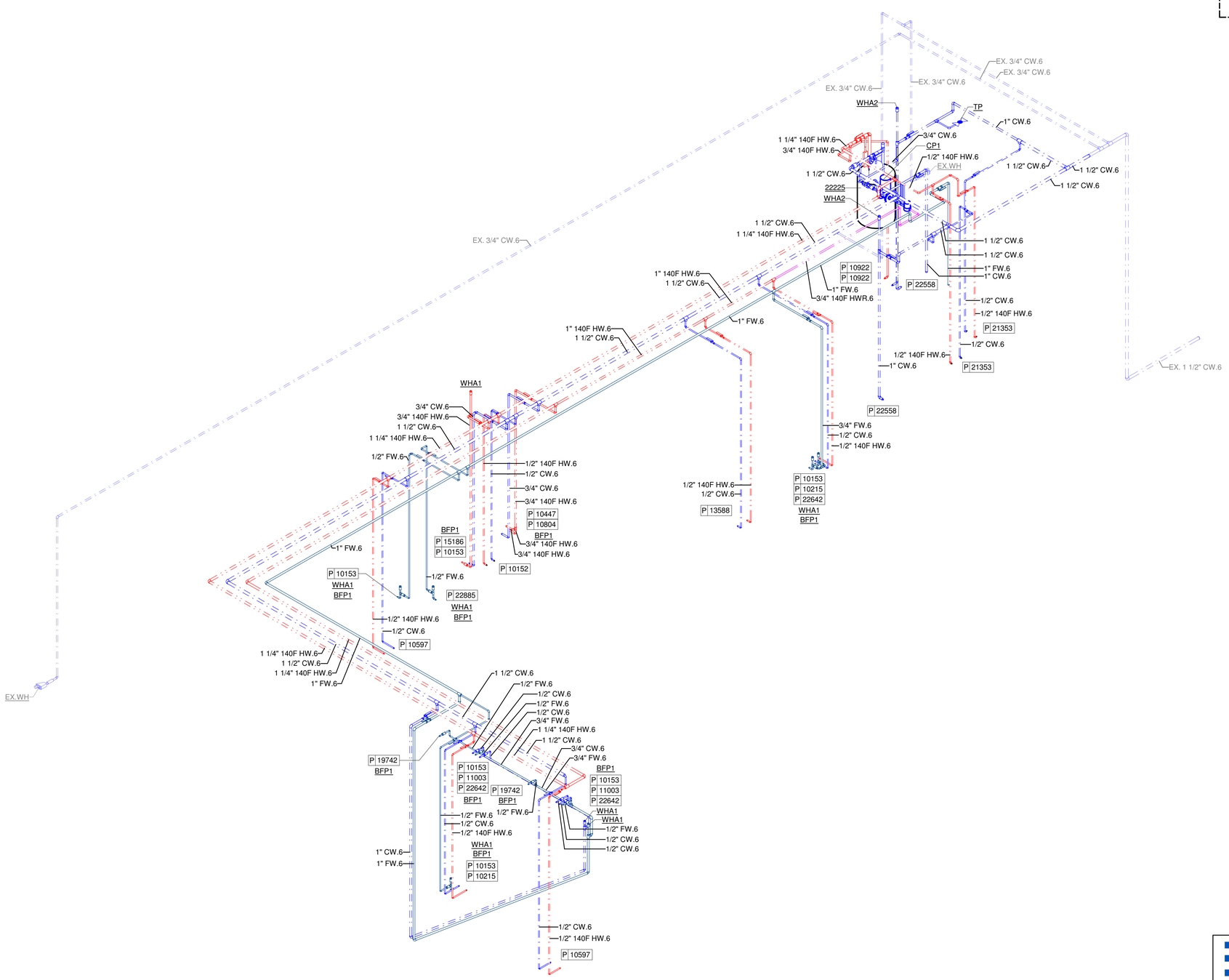

2 WATER ISOMETRIC

PERMIT SET - FOR CONSTRUCTION

© 2022 STARBUCKS COFFEE COMPANY

STARBUCKS COFFEE COMPANY
2401 UTAH AVENUE SOUTH
SEATTLE, WASHINGTON 98134
(206) 318-1575

THESE DRAWINGS AND PROJECT MANUAL ARE CONFIDENTIAL AND SHALL REMAIN THE SOLE PROPERTY OF STARBUCKS CORPORATION, WHICH IS THE OWNER OF THE COPYRIGHT IN THIS WORK. THEY SHALL NOT BE REPRODUCED (IN WHOLE OR IN PART), SHARED WITH THIRD PARTIES OR USED IN ANY MANNER ON OTHER PROJECTS OR EXTENSIONS TO THIS PROJECT WITHOUT THE PRIOR WRITTEN CONSENT OF STARBUCKS CORPORATION. THESE DRAWINGS AND SPECIFICATIONS ARE INTENDED TO EXPRESS DESIGN INTENT FOR A PROTOTYPICAL STARBUCKS STORE (WHICH IS SUBJECT TO CHANGE AT ANYTIME) AND DO NOT REFLECT ACTUAL SITE CONDITIONS. NEITHER PARTY SHALL HAVE ANY OBLIGATION NOR LIABILITY TO THE OTHER (EXCEPT STATED ABOVE) UNTIL A WRITTEN AGREEMENT IS FULLY EXECUTED BY BOTH PARTIES.

STARBUCKS TEMPLATE VERSION i2022.10.23

Gensler
MAIN OFFICE
M. ARTHUR GENSLER JR. & ASSOCIATES
FL QUALIFIER'S LIC. NO. AR96486
45 FREMONT ST, SUITE 1500
SAN FRANCISCO, CA 94105 USA
Tel (415) 433.3700
Fax (415) 836.4599
SATELLITE OFFICE
10 NORTH PARK PLACE
SUITE 400
MORRISTOWN, NJ 07960 USA
Tel (973) 290.8500

PROJECT NAME:
ST LUCIE WEST & SW CASHEMERE BLVD

PROJECT ADDRESS:
920 SW SAINT LUCIE BLVD,
PORT ST.LUCIE, FL 34986

STORE #:	81616
PROJECT #:	101357-001
ISSUE DATE:	06-27-2025
STORE DESIGNER:	ASHLEY SUEIRAS
DESIGN MANAGER:	GENSLER
ENGINEER OF RECORD:	KLH ENGINEERS

Revision Schedule

Rev	Date	By	Description

KLH ENGINEERS
MECHANICAL/ELECTRICAL ENGINEERS
WWW.KLHENGRS.COM
KOHRS LONNEMANN HEIL ENGINEERS, INC.
444 SOUTH FRONT STREET
COLUMBUS, OHIO 43215
800-354-9783 614-228-2180
614-228-2183 FAX
FORT THOMAS, KENTUCKY
LEXINGTON, KENTUCKY
LOUISVILLE, KENTUCKY
NEW YORK, NEW YORK

SHEET TITLE:
PLUMBING SUPPLY RISER
SCALE: AS SHOWN

SHEET NUMBER:
P902

SITE SCHEDULE - "Y"					
DESIGN ID	COUNT	DESCRIPTION	FURN. BY	INST. BY	COMMENTS
EXTERIOR MENU					
22540	1	MENU BOARD - DT 5 PANEL SQUARE FRAME FREESTANDING - 95X62IN 2415X1575MM - BLACK	SB	SB	
22542	1	MENU BOARD - DT PRE MENU SQUARE FRAME FREESTANDING - 29X61IN 735X1550MM - BLACK	SB	SB	
22546	1	MENU BOARD - DT DIGITAL ORDER SCREEN WITH POST - BLACK	SB	SB/GC	
FENCE AND RAILING					
21486	16	FENCE MESH - 54IN 1370MM	EXIST	EXIST	INSTALLED AND FURNISHED BY LL.
OTHER					
14103	4	BOLLARD NONILLUMINATED SQUARE - FLAT BLACK MT0028	SB	SB	
18819	5	LIGHT POLE - 12FT 350CM - FLAT BLACK MT0028	EXIST	EXIST	INSTALLED AND FURNISHED BY LL.
22543	1	DT ORDER POINT CANOPY SQUARE FRAME - BLACK	SB	SB	
23113	1	GROUND GRAPHICS DT ENTRY STENCIL	EXIST	EXIST	REFERENCE PAINT 20511 FOR SPECIFICATIONS
23117	2	GROUND GRAPHICS ARROW STENCIL	EXIST	EXIST	REFERENCE PAINT 20511 FOR SPECIFICATIONS
23119	1	GROUND GRAPHICS STOP STENCIL	EXIST	EXIST	REFERENCE PAINT 20511 FOR SPECIFICATIONS
23123	2	GROUND GRAPHICS LANES MERGE STENCIL	EXIST	EXIST	REFERENCE PAINT 20511 FOR SPECIFICATIONS
TK0016	3	BIKE RACK OLYMPIA	EXIST	EXIST	
X0900	2	VEHICLE DETECTOR LOOP	SB	SB/GC	SUPPLIER: DT AUDIO VENDOR (HME) / INSTALLER: GC; INSTALL PER MFR'S INSTRUCTIONS.
UMBRELLA					
12147	6	UMBRELLA - BASE 95LB 43KG - FLAT BLACK MT0028	SB	GC	
20073	6	UMBRELLA - WITHOUT VALANCE - 6FT 183CM - GREEN CANVAS WITH WORDMARK F0056	SB	GC	

SIGNAGE SCHEDULE - "S"						
DESIGN ID	COUNT	DESCRIPTION	FURN. BY	INST. BY	BULB	COMMENTS
SIGNAGE						
23101	1	SIGN - DRIVE THRU ILLUMINATED FLUSH MOUNT GREEN - 6IN 150MM	SB	GC		WHITE LETTERS
SIGNAGE - DISK						
13163	1	SIGN - DISK SF ILLUMINATED FLUSH MOUNTED EVOLVED - 48IN 1220MM	SB	GC		
SIGNAGE - DRIVE THRU						
23074	1	SIGN - DIRECTIONAL EXIT ONLY ILLUM DS - NEW FOUNDATION - 44IN 1120MM	SB	GC		
23083	1	SIGN - DT DIRECTIONAL ARROW ILLUM DS - NEW FOUNDATION - 44IN 1120MM	SB	GC		
23111	1	SIGN - BREAKAWAY CLEARANCE BAR SQUARE FRAME FREESTANDING - GREEN	SB	GC		
SIGNAGE - OTHER						
21297	4	SIGN - 5 MINUTE PARKING	SB	GC		POST, IF REQUIRED, PROVIDED BY OTHERS
SIGNAGE - WORDMARK						
22616	1	SIGN - WORDMARK STARBUCKS FLUSH MOUNTED - 16IN 405MM - GREEN	SB	GC		GREEN LETTERS

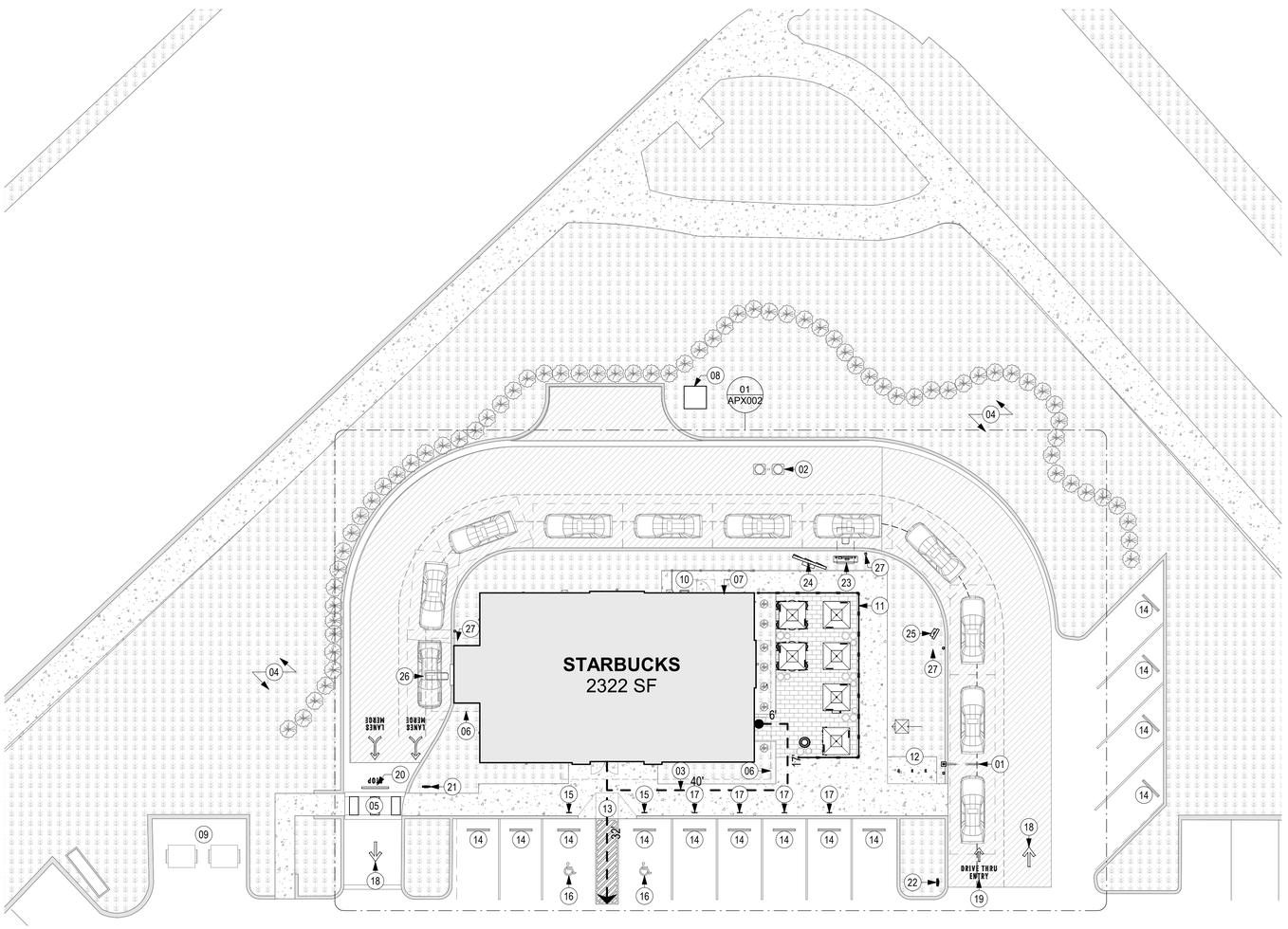

01 SITE PLAN
Scale: 1/16" = 1'-0"

N

KEYED NOTES

01 CLEARANCE BAR BY SB. FOOTING BY LL.
02 GREASE INTERCEPTOR.
03 ACCESSIBLE PATH OF TRAVEL.
04 EXISTING LANDSCAPE AREA BY LL.
05 EXISTING CROSSWALK STRIPING.
06 LINE OF EXISTING CANOPY/ AWNING ABOVE.
07 ELECTRICAL CABINET AND METER LOCATION, BY LL.
08 LOCATION FOR PAD MOUNTED TRANSFORMER. CONFIRM WITH UTILITY COMPANY, BY LL.
09 EXISTING COVERED TRASH ENCLOSURE. CONCRETE APRON TOE XTEND BEYOND DUMPSTER GATES AS INDICATED, BY LL.
10 EXISTING ROOF ACCESS LADDER.
11 PATIO RAILING BY LL.
12 BIKE RACK BY LL.
13 EXISTING ADA RAMP.
14 EXISTING WHEEL STOPS.
15 EXISTING ACCESSIBLE PARKING SIGNAGE, BY LL.
16 EXISTING ADA PARKING AND PARKING SYMBOL.
17 EXISTING "5-MINUTE PARKING" SIGNAGE, INSTALLED BY LL.
18 PAVEMENT WHITE ARROW BY LL.
19 DRIVE-THRU ENTRANCE PAVEMENT SIGN BY LL.
20 DRIVE-THRU "STOP/ DO NOT ENTER" PAVEMENT SIGN BY LL.
21 DT DIRECTIONAL DO NOT ENTER/THANK YOU SIGN BY SB. CONCRETE FOOTING DESIGN BY SIGNAGE VENDOR, FURNISHED AND INSTALL BY LL. CONDUIT AND POWER BY LL. SEE DETAIL: 05/APX503
22 DT DIRECTIONAL FREESTANDING ILLUMINATED SIGNAGE. EXISTING CONCRETE FOOTING AND CONDUIT. SEE DETAIL: 05/APX503
23 DIGITAL ORDER SCREEN AND CONTROL BOX BY SB. CONCRETE FOOTING DESIGN BY SIGNAGE VENDOR, FURNISHED AND INSTALL BY LL. CONDUIT AND POWER BY LL.
24 DT MENU BOARD BY SV. CONCRETE FOOTING DESIGN BY SIGNAGE VENDOR, FURNISHED AND INSTALL BY LL. CONDUIT AND POWER BY LL.
25 DT PRE-MENU BY SV. CONCRETE FOOTING DESIGN BY SIGNAGE VENDOR, FURNISHED AND INSTALL BY LL. CONDUIT AND POWER BY LL.
26 DT VEHICLE DETECTION LOOP BY SV. CONDUIT AND POWER BY LL. GC TO COORDINATE INSTALATION PREVIOUS SITE WORK.
27 NON-ILLUMINATED BOLLARD, INSTALLED BY LL. SEE DETAIL: 10/APX503

GENERAL NOTES

A. REFER TO EXTERIOR ELEVATIONS ON SHEET A201 FOR BUILDING SIGNAGE LOCATION AND DESIGN ID. REFER TO ELECTRICAL PLANS FOR ELECTRICAL REQUIREMENTS.

B. LANDSCAPING TO BE PROVIDED PER ZONING CODE AND SUSTAINABILITY REQUIREMENTS.

C. DRIVE-THRU EQUIPMENT INCLUDING VEHICLE DETECTION LOOP, WIRELESS COMMUNICATION AND MONITORS SHALL BE COORDINATED BY STARBUCKS CONSTRUCTION MANAGER. REFER TO ELECTRICAL DRAWINGS FOR ADDITIONAL REQUIREMENTS.

D. PROVIDE 6" (150MM) THICK CONCRETE PAVING THE LENGTH OF THE DRIVE-THRU LANE, EXTENT TO INCLUDE DRIVE-THRU ENTRY POINT THROUGH WINDOW STANDING PAD.

E. GENERAL CONTRACTOR TO APPLY CONCRETE SEALER TO ALL EXTERIOR CONCRETE PATIO AND WALKWAY SURFACES.

F. GENERAL CONTRACTOR TO VERIFY ALL EXISTING ELEVATIONS AND BUILDING CONDITIONS IN FIELD PRIOR TO START OF CONSTRUCTION.

G. PROVIDE DETECTABLE WARNING (IF APPLICABLE PER LOCAL CODE) AT TRANSITION FROM SIDEWALK TO DRIVE AISLE.

H. ACCESSIBLE PARKING SPACES AND ACCESS AISLES SHALL HAVE SURFACE SLOPE NOT TO EXCEED 2% IN ALL DIRECTIONS.

I. REFER TO ELECTRICAL DRAWINGS FOR SITE RELATED ELECTRICAL WORK.

J. SCRAPE AND REPAINT ALL EXISTING PAINTED SITE FEATURES, INCLUDING, BUT NOT LIMITED TO CURBS, BOLLARDS, RAILINGS AND SITE LIGHTING BASES.

K. SEE SHEET A002 FOR ARCHITECTURAL SITE DETAILS.

LEGEND

EXISTING LANDSCAPE AREA
EXISTING CONCRETE WALKWAY
EXISTING 6" (150MM) CONCRETE CURB
EXISTING ASPHALT
EXISTING CONCRETE WITH INTEGRAL BLACK STAIN
ACCCESSIBLE PATH OF TRAVEL
PROPERTY LINE

RESPONSIBILITY LEGEND

FURNISHED BY	INSTALLED BY
GC - GENERAL CONTRACTOR	GC - GENERAL CONTRACTOR
SB - STARBUCKS WAREHOUSE / 3PL OR VENDOR DIRECT	SB - STARBUCKS WAREHOUSE / 3PL OR VENDOR DIRECT
	CV - VENDOR
LL - LANDLORD	LL - LANDLORD

FOR REFERENCE ONLY

© 2022 STARBUCKS COFFEE COMPANY

STARBUCKS®
2401 UTAH AVENUE SOUTH
SEATTLE, WASHINGTON 98134
(206) 318-1575

THESE DRAWINGS AND THE PROJECT MANUAL ARE CONFIDENTIAL AND SHALL REMAIN THE SOLE PROPERTY OF STARBUCKS CORPORATION, WHICH IS THE OWNER OF THE COPYRIGHT IN THIS WORK. THEY SHALL NOT BE REPRODUCED (IN WHOLE OR IN PART), SHARED WITH THIRD PARTIES OR USED IN ANY MANNER ON OTHER PROJECTS OR EXTENSIONS TO THIS PROJECT WITHOUT THE PRIOR WRITTEN CONSENT OF STARBUCKS CORPORATION. THESE DRAWINGS AND SPECIFICATIONS ARE INTENDED TO EXPRESS DESIGN INTENT FOR A PROTOTYPICAL STARBUCKS STORE (WHICH IS SUBJECT TO CHANGE AT ANYTIME) AND DO NOT REFLECT ACTUAL SITE CONDITIONS. NEITHER PARTY SHALL HAVE ANY OBLIGATION NOR LIABILITY TO THE OTHER (EXCEPT STATED ABOVE) UNTIL A WRITTEN AGREEMENT IS FULLY EXECUTED BY BOTH PARTIES.

STARBUCKS TEMPLATE VERSION: i2023.04.24

Gensler
MAIN OFFICE
M. ARTHUR GENSLER JR. & ASSOCIATES
220 MONTGOMERY STREET, SUITE 200
SAN FRANCISCO, CA 94104 USA
Tel (415) 433.3700
Fax (415) 836.4599

SATELLITE OFFICE
M. ARTHUR GENSLER JR. & ASSOCIATES
FL QUALIFIER'S LIC. NO. AR96486
545 NW 26TH ST
SUITE 250
MIAMI, FL 33127 USA
Tel (305) 350.7070
Fax (305) 350.7071

PROJECT NAME:
ST LUCIE WEST & SW CASHEMERE BLVD

PROJECT ADDRESS:
920 SW SAINT LUCIE BLVD, PORT ST.LUCIE, FL 34986

STORE #:	81616
PROJECT #:	101357-001
ISSUE DATE:	07-08-2025
DESIGN MANAGER:	ASHLEY SUEIRAS
PRODUCTION DESIGNER:	GENSLER
CHECKED BY:	GENSLER

Revision Schedule

Rev	Date	By	Description
1	Date 1		Revision 1

SHEET TITLE:
ARCHITECTURAL SITE PLAN
SCALE: AS SHOWN

SHEET NUMBER:
APX001

RESPONSIBILITY LEGEND

FURNISHED BY	INSTALLED BY
GC - GENERAL CONTRACTOR	GC - GENERAL CONTRACTOR
SB - STARBUCKS WAREHOUSE / 3PL OR VENDOR DIRECT	SB - STARBUCKS WAREHOUSE / 3PL OR VENDOR DIRECT
	CV - VENDOR
LL - LANDLORD	LL - LANDLORD

LEGEND

- EXISTING LANDSCAPE AREA
- EXISTING CONCRETE WALKWAY
- EXISTING 6" (150MM) CONCRETE CURB
- EXISTING ASPHALT
- EXISTING CONCRETE WITH INTEGRAL BLACK STAIN
- ACCCESSIBLE PATH OF TRAVEL
- PROPERTY LINE

GENERAL NOTES

A. REFER TO EXTERIOR ELEVATIONS ON SHEET A201 FOR BUILDING SIGNAGE LOCATION AND DESIGN ID. REFER TO ELECTRICAL PLANS FOR ELECTRICAL REQUIREMENTS.

B. LANDSCAPING TO BE PROVIDED PER ZONING CODE AND SUSTAINABILITY REQUIREMENTS.

C. DRIVE-THRU EQUIPMENT INCLUDING VEHICLE DETECTION LOOP, WIRELESS COMMUNICATION AND MONITORS SHALL BE COORDINATED BY STARBUCKS CONSTRUCTION MANAGER. REFER TO ELECTRICAL DRAWINGS FOR ADDITIONAL REQUIREMENTS.

D. PROVIDE 6" (150MM) THICK CONCRETE PAVING THE LENGTH OF THE DRIVE-THRU LANE, EXTENT TO INCLUDE DRIVE-THRU ENTRY POINT THROUGH WINDOW STANDING PAD.

E. GENERAL CONTRACTOR TO APPLY CONCRETE SEALER TO ALL EXTERIOR CONCRETE PATIO AND WALKWAY SURFACES.

F. GENERAL CONTRACTOR TO VERIFY ALL EXISTING ELEVATIONS AND BUILDING CONDITIONS IN FIELD PRIOR TO START OF CONSTRUCTION.

G. PROVIDE DETECTABLE WARNING (IF APPLICABLE PER LOCAL CODE) AT TRANSITION FROM SIDEWALK TO DRIVE AISLE.

H. ACCESSIBLE PARKING SPACES AND ACCESS AISLES SHALL HAVE SURFACE SLOPE NOT TO EXCEED 2% IN ALL DIRECTIONS.

I. REFER TO ELECTRICAL DRAWINGS FOR SITE RELATED ELECTRICAL WORK.

J. SCRAPE AND REPAINT ALL EXISTING PAINTED SITE FEATURES, INCLUDING, BUT NOT LIMITED TO CURBS, BOLLARDS, RAILINGS AND SITE LIGHTING BASES.

K. SEE SHEET A002 FOR ARCHITECTURAL SITE DETAILS.

KEYED NOTES

01 CLEARANCE BAR BY SB. FOOTING BY LL.
02 GREASE INTERCEPTOR.
03 ACCESSIBLE PATH OF TRAVEL.
04 EXISTING LANDSCAPE AREA BY LL.
05 EXISTING CROSSWALK STRIPING.
06 LINE OF EXISTING CANOPY/ AWNING ABOVE.
10 EXISTING ROOF ACCESS LADDER.
11 PATIO RAILING BY LL.
12 BIKE RACK BY LL.
13 EXISTING ADA RAMP.
14 EXISTING WHEEL STOPS.
15 EXISTING ACCESSIBLE PARKING SIGNAGE, BY LL.
16 EXISTING ADA PARKING AND PARKING SYMBOL.
17 EXISTING "5-MINUTE PARKING" SIGNAGE, INSTALLED BY LL.
18 PAVEMENT WHITE ARROW BY LL.
19 DRIVE-THRU ENTRANCE PAVEMENT SIGN BY LL.
20 DRIVE-THRU "STOP/ DO NOT ENTER" PAVEMENT SIGN BY LL.
21 DT DIRECTIONAL DO NOT ENTER/THANK YOU SIGN BY SB. CONCRETE FOOTING DESIGN BY SIGNAGE VENDOR, FURNISHED AND INSTALL BY LL. CONDUIT AND POWER BY LL. SEE DETAIL: 05/APX503
22 DT DIRECTIONAL FREESTANDING ILLUMINATED SIGNAGE. EXISTING CONCRETE FOOTING AND CONDUIT. SEE DETAIL: 05/APX503
23 DIGITAL ORDER SCREEN AND CONTROL BOX BY SB. CONCRETE FOOTING DESIGN BY SIGNAGE VENDOR, FURNISHED AND INSTALL BY LL. CONDUIT AND POWER BY LL.
24 DT MENU BOARD BY SV. CONCRETE FOOTING DESIGN BY SIGNAGE VENDOR, FURNISHED AND INSTALL BY LL. CONDUIT AND POWER BY LL.
25 DT PRE-MENU BY SV. CONCRETE FOOTING DESIGN BY SIGNAGE VENDOR, FURNISHED AND INSTALL BY LL. CONDUIT AND POWER BY LL.
26 DT VEHICLE DETECTION LOOP BY SV. CONDUIT AND POWER BY LL. GC TO COORDINATE INSTALATION PREVIOUS SITE WORK.
27 NON-ILLUMINATED BOLLARD, INSTALLED BY LL. SEE DETAIL: 10/APX503

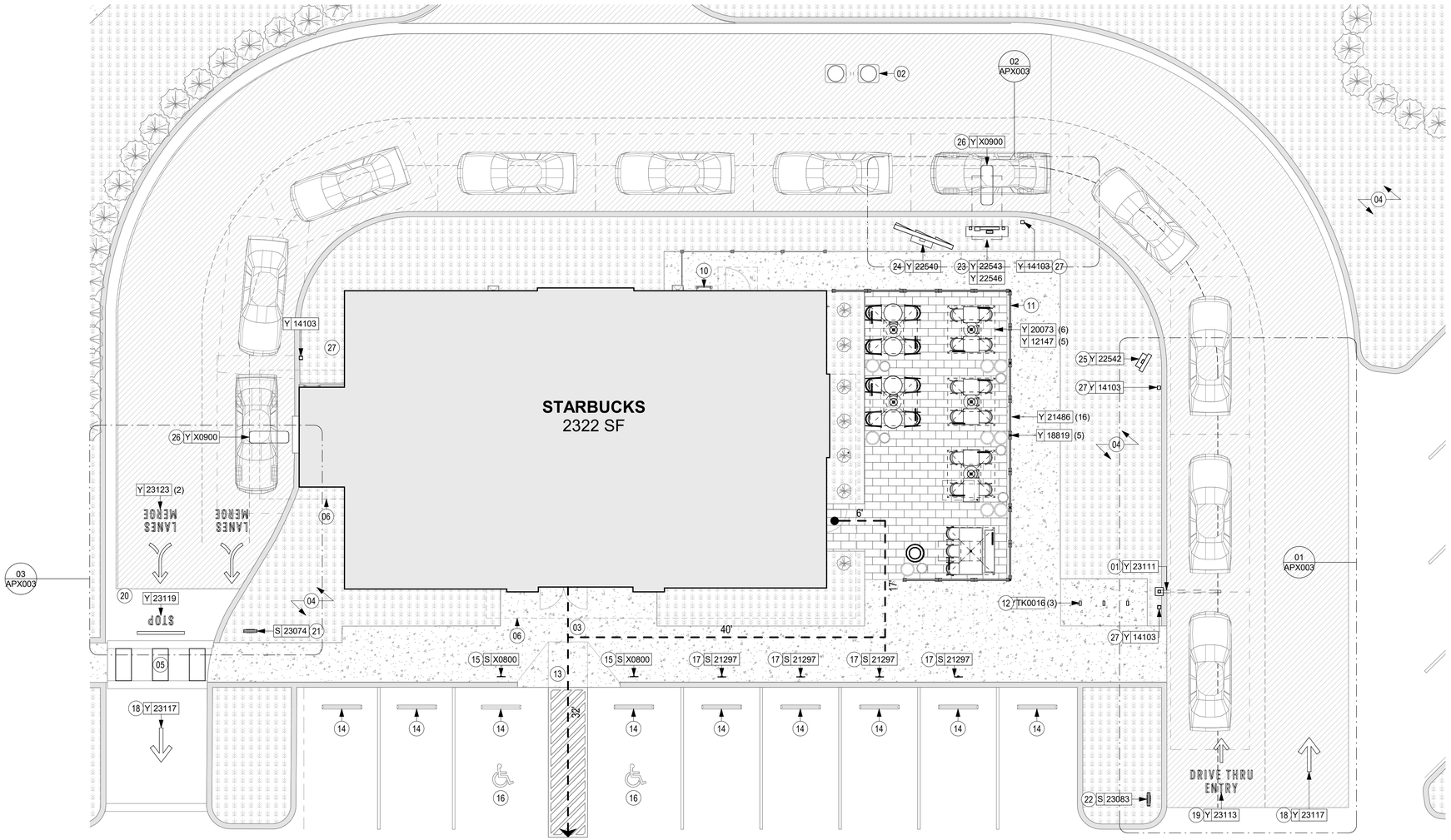

01 ENLARGED SITE PLAN
Scale: 1/8" = 1'-0"

N

FOR REFERENCE ONLY

© 2022 STARBUCKS COFFEE COMPANY

STARBUCKS®
2401 UTAH AVENUE SOUTH
SEATTLE, WASHINGTON 98134
(206) 318-1575

THESE DRAWINGS AND THE PROJECT MANUAL ARE CONFIDENTIAL AND SHALL REMAIN THE SOLE PROPERTY OF STARBUCKS CORPORATION, WHICH IS THE OWNER OF THE COPYRIGHT IN THIS WORK. THEY SHALL NOT BE REPRODUCED (IN WHOLE OR IN PART), SHARED WITH THIRD PARTIES OR USED IN ANY MANNER ON OTHER PROJECTS OR EXTENSIONS TO THIS PROJECT WITHOUT THE PRIOR WRITTEN CONSENT OF STARBUCKS CORPORATION. THESE DRAWINGS AND SPECIFICATIONS ARE INTENDED TO EXPRESS DESIGN INTENT FOR A PROTOTYPICAL STARBUCKS STORE (WHICH IS SUBJECT TO CHANGE AT ANYTIME) AND DO NOT REFLECT ACTUAL SITE CONDITIONS. NEITHER PARTY SHALL HAVE ANY OBLIGATION NOR LIABILITY TO THE OTHER (EXCEPT STATED ABOVE) UNTIL A WRITTEN AGREEMENT IS FULLY EXECUTED BY BOTH PARTIES.

STARBUCKS TEMPLATE VERSION: i2023.04.24

Gensler
MAIN OFFICE
M. ARTHUR GENSLER JR. & ASSOCIATES
220 MONTGOMERY STREET, SUITE 200
SAN FRANCISCO, CA 94104 USA
Tel (415) 433.3700
Fax (415) 836.4599

SATELLITE OFFICE
M. ARTHUR GENSLER JR. & ASSOCIATES
FL QUALIFIER'S LIC. NO. AR96486
545 NW 26TH ST
SUITE 250
MIAMI, FL 33127 USA
Tel (305) 350.7070
Fax (305) 350.7071

PROJECT NAME:
ST LUCIE WEST & SW CASHEMERE BLVD

PROJECT ADDRESS:
920 SW SAINT LUCIE BLVD, PORT ST.LUCIE, FL 34986

STORE #:	81616
PROJECT #:	101357-001
ISSUE DATE:	07-08-2025
DESIGN MANAGER:	ASHLEY SUEIRAS
PRODUCTION DESIGNER:	GENSLER
CHECKED BY:	GENSLER

Revision Schedule

Rev	Date	By	Description

SHEET TITLE:
ENLARGED SITE PLANS

SCALE: AS SHOWN

SHEET NUMBER:
APX002

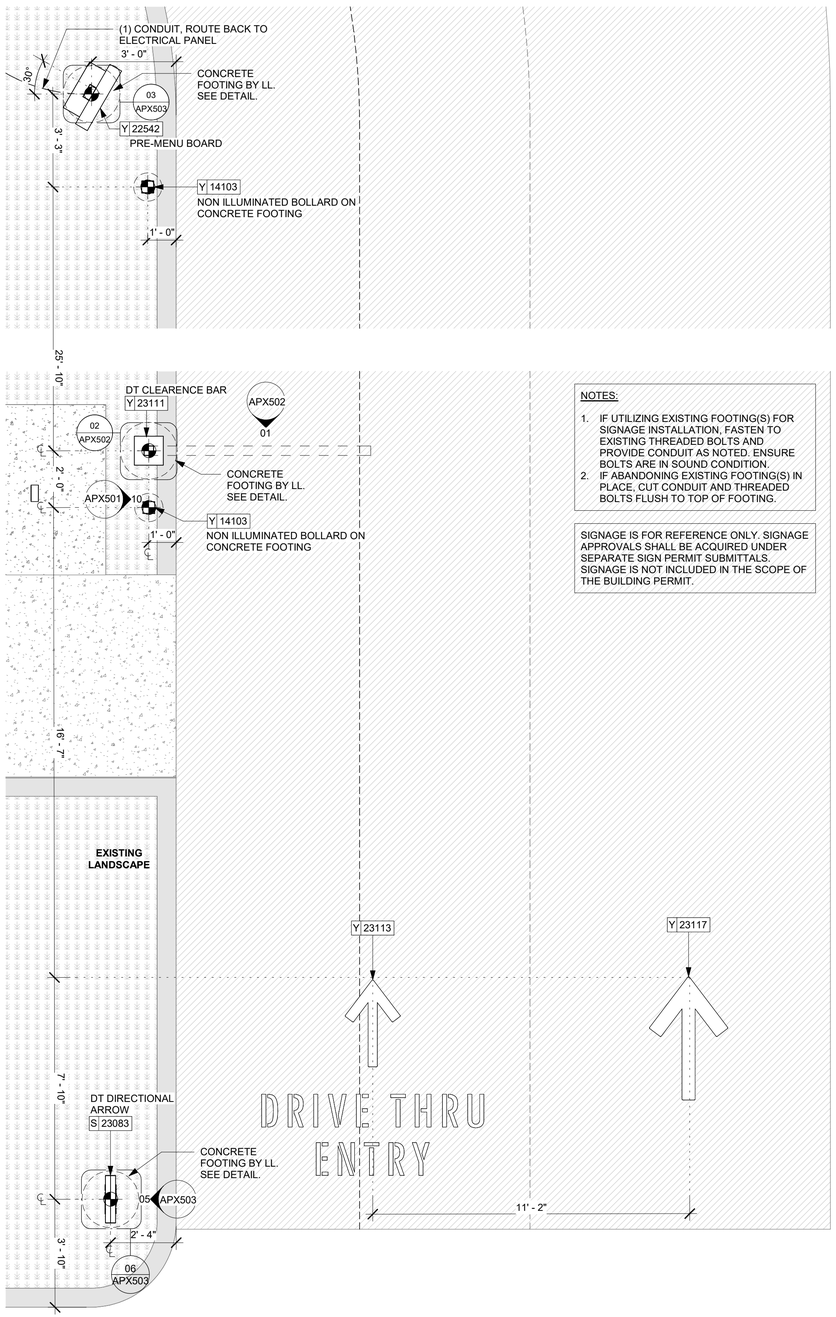

NOTES:

1. IF UTILIZING EXISTING FOOTING(S) FOR SIGNAGE INSTALLATION, FASTEN TO EXISTING THREADED BOLTS AND PROVIDE CONDUIT AS NOTED. ENSURE BOLTS ARE IN SOUND CONDITION.
2. IF ABANDONING EXISTING FOOTING(S) IN PLACE, CUT CONDUIT AND THREADED BOLTS FLUSH TO TOP OF FOOTING.

SIGNAGE IS FOR REFERENCE ONLY. SIGNAGE APPROVALS SHALL BE ACQUIRED UNDER SEPARATE SIGN PERMIT SUBMITTALS. SIGNAGE IS NOT INCLUDED IN THE SCOPE OF THE BUILDING PERMIT.

01 PRE-MENU BOARD, CLEARANCE BAR AND DIRECTIONAL LOCATION

Scale: 3/8" = 1'-0"

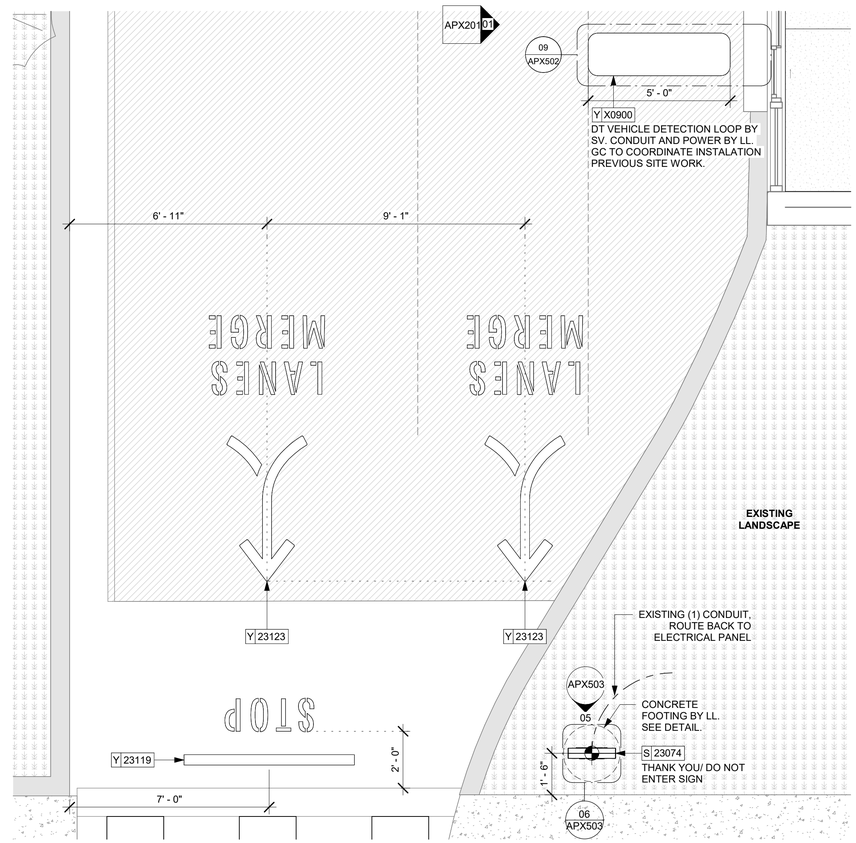

03 ILLUMINATED DIRECTIONAL SIGNAGE LOCATION- EXIT ONLY

Scale: 3/8" = 1'-0"

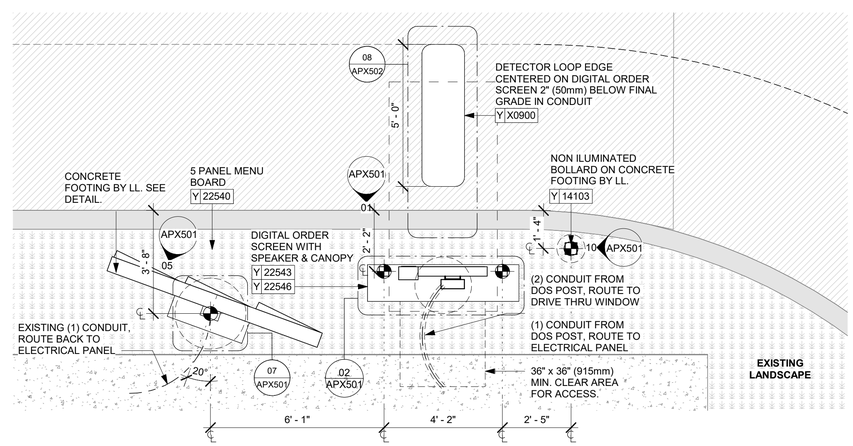

02 5-PANEL MENU BOARD AND DIGITAL ORDER SCREEN LOCATION

Scale: 3/8" = 1'-0"

GENERAL NOTES

A. REFER TO EXTERIOR ELEVATIONS ON SHEET A201 FOR BUILDING SIGNAGE LOCATION AND DESIGN ID. REFER TO ELECTRICAL PLANS FOR ELECTRICAL REQUIREMENTS.

B. LANDSCAPING TO BE PROVIDED PER ZONING CODE AND SUSTAINABILITY REQUIREMENTS.

C. DRIVE-THRU EQUIPMENT INCLUDING VEHICLE DETECTION LOOP, WIRELESS COMMUNICATION AND MONITORS SHALL BE COORDINATED BY STARBUCKS CONSTRUCTION MANAGER. REFER TO ELECTRICAL DRAWINGS FOR ADDITIONAL REQUIREMENTS.

D. PROVIDE 6" (150MM) THICK CONCRETE PAVING THE LENGTH OF THE DRIVE-THRU LANE, EXTENT TO INCLUDE DRIVE-THRU ENTRY POINT THROUGH WINDOW STANDING PAD.

E. GENERAL CONTRACTOR TO APPLY CONCRETE SEALER TO ALL EXTERIOR CONCRETE PATIO AND WALKWAY SURFACES.

F. GENERAL CONTRACTOR TO VERIFY ALL EXISTING ELEVATIONS AND BUILDING CONDITIONS IN FIELD PRIOR TO START OF CONSTRUCTION.

G. PROVIDE DETECTABLE WARNING (IF APPLICABLE PER LOCAL CODE) AT TRANSITION FROM SIDEWALK TO DRIVE AISLE.

H. ACCESSIBLE PARKING SPACES AND ACCESS AISLES SHALL HAVE SURFACE SLOPE NOT TO EXCEED 2% IN ALL DIRECTIONS.

I. REFER TO ELECTRICAL DRAWINGS FOR SITE RELATED ELECTRICAL WORK.

J. SCRAPE AND REPAINT ALL EXISTING PAINTED SITE FEATURES, INCLUDING, BUT NOT LIMITED TO CURBS, BOLLARDS, RAILINGS AND SITE LIGHTING BASES.

K. SEE SHEET A002 FOR ARCHITECTURAL SITE DETAILS.

LEGEND

- EXISTING LANDSCAPE AREA
- EXISTING CONCRETE WALKWAY
- EXISTING 6" (150MM) CONCRETE CURB
- EXISTING ASPHALT
- EXISTING CONCRETE WITH INTEGRAL BLACK STAIN
- ACCCESSIBLE PATH OF TRAVEL
- PROPERTY LINE

RESPONSIBILITY LEGEND

FURNISHED BY	INSTALLED BY
GC - GENERAL CONTRACTOR	GC - GENERAL CONTRACTOR
SB - STARBUCKS WAREHOUSE / 3PL OR VENDOR DIRECT	SB - STARBUCKS WAREHOUSE / 3PL OR VENDOR DIRECT
	CV - VENDOR
LL - LANDLORD	LL - LANDLORD

FOR REFERENCE ONLY

© 2022 STARBUCKS COFFEE COMPANY

STARBUCKS®
2401 UTAH AVENUE SOUTH
SEATTLE, WASHINGTON 98134
(206) 318-1575

THESE DRAWINGS AND THE PROJECT MANUAL ARE CONFIDENTIAL AND SHALL REMAIN THE SOLE PROPERTY OF STARBUCKS CORPORATION, WHICH IS THE OWNER OF THE COPYRIGHT IN THIS WORK. THEY SHALL NOT BE REPRODUCED (IN WHOLE OR IN PART), SHARED WITH THIRD PARTIES OR USED IN ANY MANNER ON OTHER PROJECTS OR EXTENSIONS TO THIS PROJECT WITHOUT THE PRIOR WRITTEN CONSENT OF STARBUCKS CORPORATION. THESE DRAWINGS AND SPECIFICATIONS ARE INTENDED TO EXPRESS DESIGN INTENT FOR A PROTOTYPICAL STARBUCKS STORE (WHICH IS SUBJECT TO CHANGE AT ANYTIME) AND DO NOT REFLECT ACTUAL SITE CONDITIONS. NEITHER PARTY SHALL HAVE ANY OBLIGATION NOR LIABILITY TO THE OTHER (EXCEPT STATED ABOVE) UNTIL A WRITTEN AGREEMENT IS FULLY EXECUTED BY BOTH PARTIES.

STARBUCKS TEMPLATE VERSION: i2023.04.24

Gensler

MAIN OFFICE
M. ARTHUR GENSLER JR. & ASSOCIATES
220 MONTGOMERY STREET, SUITE 200
SAN FRANCISCO, CA 94104 USA
Tel (415) 433.3700
Fax (415) 836.4599

SATELLITE OFFICE
M. ARTHUR GENSLER JR. & ASSOCIATES
FL QUALIFIER'S LIC. NO. AR96486
545 NW 26TH ST
SUITE 250
MIAMI, FL 33127 USA
Tel (305) 350.7070
Fax (305) 350.7071

PROJECT NAME:
ST LUCIE WEST & SW CASHEMERE BLVD

PROJECT ADDRESS:
920 SW SAINT LUCIE BLVD, PORT ST.LUCIE, FL 34986

STORE #:	81616
PROJECT #:	101357-001
ISSUE DATE:	07-08-2025
DESIGN MANAGER:	ASHLEY SUEIRAS
PRODUCTION DESIGNER:	GENSLER
CHECKED BY:	GENSLER

Revision Schedule

Rev	Date	By	Description

SHEET TITLE:
ENLARGED SITE PLANS

SCALE: AS SHOWN

SHEET NUMBER:
APX003

KEYED NOTES

01 EXISTING RTU 1, PROVIDED BY LANDLORD:
- 12.5 TON. 5000 CFM
- MANUFATURER: TRANE
- MODEL: THJ150
- ELECTRIC HEAT

02 EXISTING RTU 2, PROVIDED BY LANDLORD:
- 12.5 TON. 5000 CFM
- MANUFATURER: TRANE
- MODEL: THJ150
- ELECTRIC HEAT

03 REMOTE ICE MACHINE CONDENSER ROOF MOUNTED:
- MANUFACTURER: FOLLET
- MODEL: HORIZON ELITE 2110 SERIES

04 EXISTING RESTROOM EXHAUST FAN EF-1, PROVIDED BY LANDLORD:
- 300 CFM
- MANUFACTURER: GREENHECK
- MODEL: GB-081-VG

05 EXISTING THRU-WALL SPOUT.

06 EXISTING THRU-WALL OVERFLOW SCUPPER.

07 EXISTING ROOF ACCESS LADDER.

09 EXISTING PRE -FINISHED METAL COPING (TYP.).

10 OUTLINE OF EXISTING AWNING BELOW. SEE ELEVATIONS.

11 EXISTING ROOF CRICKET SLOPE AT 1/4" PER 12".

GENERAL NOTES

A. GENERAL CONTRACTOR TO VERIFY ALL DIMENSIONS AND NOTIFY STARBUCKS CONSTRUCTION MANAGER OF ANY DISCREPANCIES PRIOR TO CONSTRUCTION. ALL DIMENSIONS TO BE TAKEN FROM DESIGNATED DATUM POINT.

B. IN FREEZE THAW CLIMATES ONLY: INSTALL SELF-REGULATING HEAT TAPE IN ALL DOWNSPOUTS. SEE ELECTRICAL FOR FURTHER INFORMATION.

C. ROOF TOP PLUMBING VENTS ARE NOT SHOWN FOR CLARITY. REFER TO PLUMBING DRAWINGS FOR VTR LOCATIONS AND FURTHER INFORMATION.

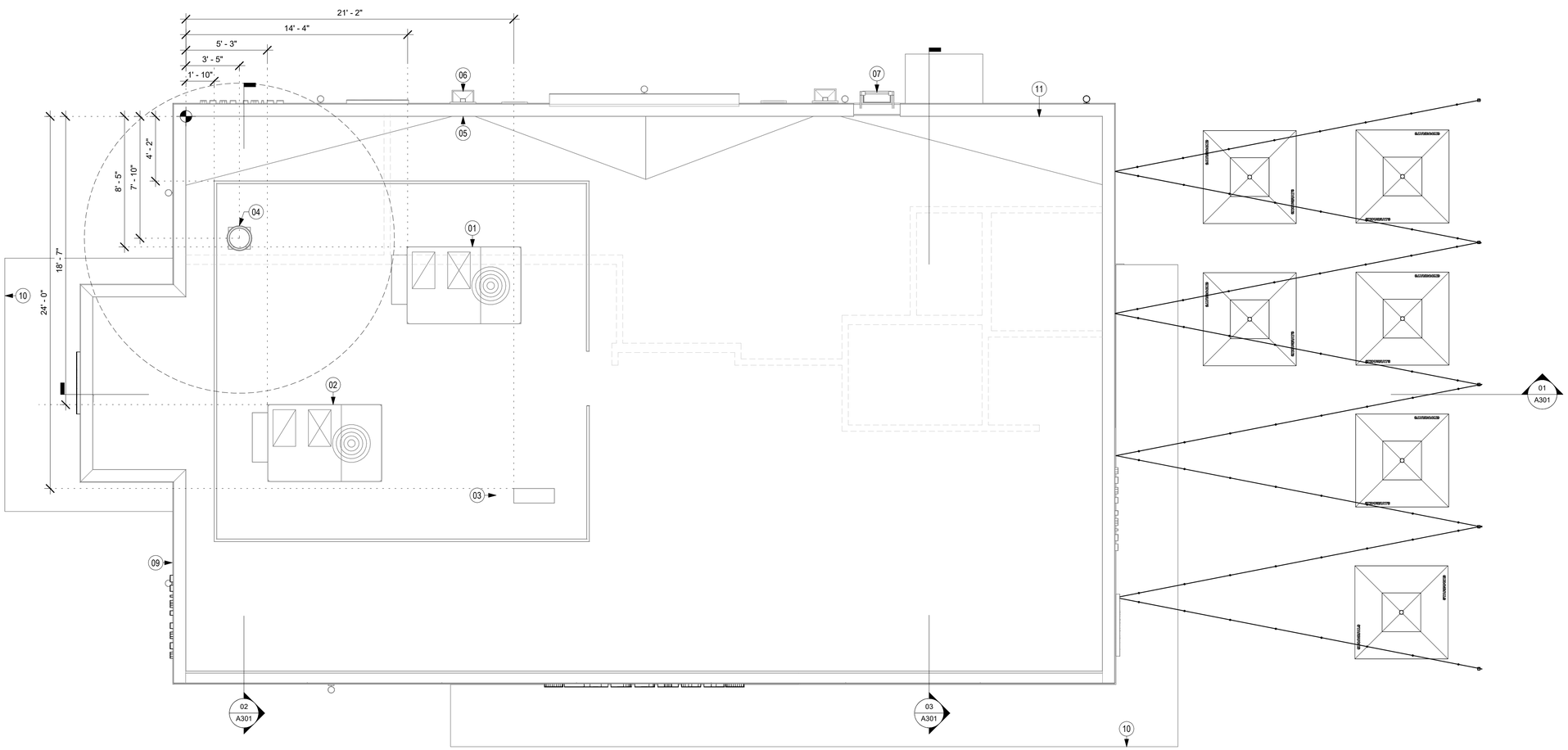

01 ROOF PLAN
Scale: 1/4" = 1'-0"

FOR REFERENCE ONLY

© 2022 STARBUCKS COFFEE COMPANY

STARBUCKS®
2401 UTAH AVENUE SOUTH
SEATTLE, WASHINGTON 98134
(206) 318-1575

THESE DRAWINGS AND THE PROJECT MANUAL ARE CONFIDENTIAL AND SHALL REMAIN THE SOLE PROPERTY OF STARBUCKS CORPORATION, WHICH IS THE OWNER OF THE COPYRIGHT IN THIS WORK. THEY SHALL NOT BE REPRODUCED (IN WHOLE OR IN PART), SHARED WITH THIRD PARTIES OR USED IN ANY MANNER ON OTHER PROJECTS OR EXTENSIONS TO THIS PROJECT WITHOUT THE PRIOR WRITTEN CONSENT OF STARBUCKS CORPORATION. THESE DRAWINGS AND SPECIFICATIONS ARE INTENDED TO EXPRESS DESIGN INTENT FOR A PROTOTYPICAL STARBUCKS STORE (WHICH IS SUBJECT TO CHANGE AT ANYTIME) AND DO NOT REFLECT ACTUAL SITE CONDITIONS. NEITHER PARTY SHALL HAVE ANY OBLIGATION NOR LIABILITY TO THE OTHER (EXCEPT STATED ABOVE) UNTIL A WRITTEN AGREEMENT IS FULLY EXECUTED BY BOTH PARTIES.

STARBUCKS TEMPLATE VERSION: i2023.04.24

Gensler
MAIN OFFICE
M. ARTHUR GENSLER JR. & ASSOCIATES
220 MONTGOMERY STREET, SUITE 200
SAN FRANCISCO, CA 94104 USA
Tel (415) 433.3700
Fax (415) 836.4599

SATELLITE OFFICE
M. ARTHUR GENSLER JR. & ASSOCIATES
FL QUALIFIER'S LIC. NO. AR96486
545 NW 26TH ST
SUITE 250
MIAMI, FL 33127 USA
Tel (305) 350.7070
Fax (305) 350.7071

PROJECT NAME:
ST LUCIE WEST & SW
CASHEMERE BLVD

PROJECT ADDRESS:
920 SW SAINT LUCIE BLVD, PORT
ST.LUCIE, FL 34986

STORE #:	81616
PROJECT #:	101357-001
ISSUE DATE:	07-08-2025
DESIGN MANAGER:	ASHLEY SUEIRAS
PRODUCTION DESIGNER:	GENSLER
CHECKED BY:	GENSLER

Revision Schedule

Rev	Date	By	Description
1	Date 1		Revision 1

SHEET TITLE:
BUILDING ROOF PLAN

SCALE: AS SHOWN

SHEET NUMBER:
APX103

SIGNAGE SCHEDULE - "S"						
DESIGN ID	COUNT	DESCRIPTION	FURN. BY	INST. BY	BULB	COMMENTS
SIGNAGE						
23101	1	SIGN - DRIVE THRU ILLUMINATED FLUSH MOUNT GREEN - 6IN 150MM	SB	GC		WHITE LETTERS
SIGNAGE - DISK						
13163	1	SIGN - DISK SF ILLUMINATED FLUSH MOUNTED EVOLVED - 48IN 1220MM	SB	GC		
SIGNAGE - DRIVE THRU						
23074	1	SIGN - DIRECTIONAL EXIT ONLY ILLUM DS - NEW FOUNDATION - 44IN 1120MM	SB	GC		
23083	1	SIGN - DT DIRECTIONAL ARROW ILLUM DS - NEW FOUNDATION - 44IN 1120MM	SB	GC		
23111	1	SIGN - BREAKAWAY CLEARANCE BAR SQUARE FRAME FREESTANDING - GREEN	SB	GC		
SIGNAGE - OTHER						
21297	4	SIGN - 5 MINUTE PARKING	SB	GC		POST, IF REQUIRED, PROVIDED BY OTHERS
SIGNAGE - WORDMARK						
22616	1	SIGN - WORDMARK STARBUCKS FLUSH MOUNTED - 16IN 405MM - GREEN	SB	GC		GREEN LETTERS

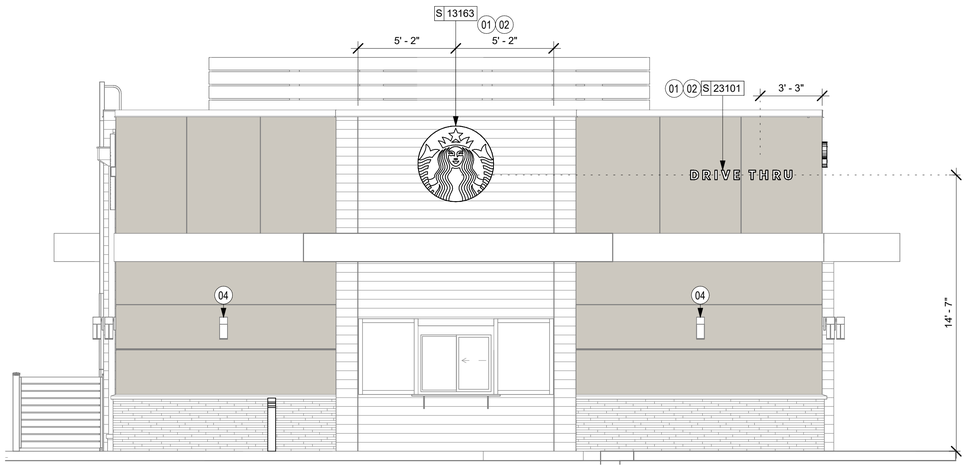

01 DT BUMP ELEVATION
Scale: 1/4" = 1'-0"

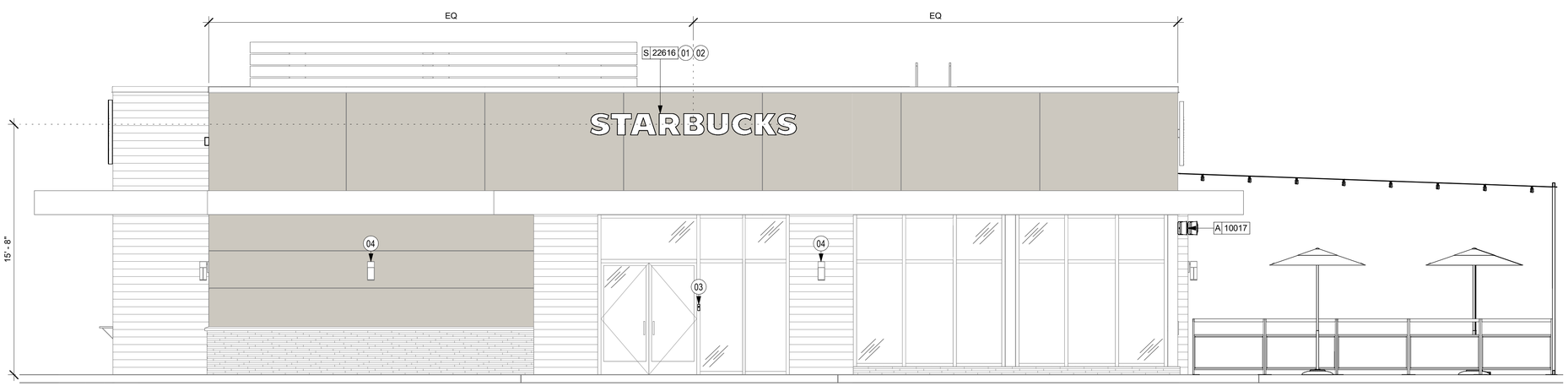

02 MAIN ENTRANCE ELEVATION
Scale: 1/4" = 1'-0"

KEYED NOTES

01 PROVIDE J-BOX FOR BUILDING SIGNAGE. COORDINATE LOCATION WITH SIGNAGE VENDOR SHOP DRAWINGS. PROVIDE SIGNAGE DISCONNECT ON INSIDE FACE OF WALL.

02 3/4" MARINE GRADE PLYWOOD BLOCKING FOR EXTERIOR SIGNAGE. EXTEND BLOCKING 8" (205MM) MIN. BEYOND EDGE OF SIGNAGE.EXISTING STOREFRONT DOOR AND/ OR WINDOW SYSTEM.

03 NEW BARRIER FREE HARDWARE ACTUATOR. REFER TO A601..

04 EXISTING EXTERIOR SCONCE.

GENERAL NOTES

A. GENERAL CONTRACTOR TO COORDINATE AND SCHEDULE SIGNAGE INSTALLATION WITH THE SIGNAGE CONTRACTOR PROVIDING A MINIMUM SCHEDULING NOTICE OF 4 WEEKS AND 1 WEEK PRIOR TO SCHEDULED DATE OF INSTALLATION. CONSTRUCTION MANAGER TO PROVIDE GENERAL CONTRACTOR WITH SIGNAGE CONTRACTOR CONTACT INFORMATION.

B. GENERAL CONTRACTOR SHALL COORDINATE WITH ELECTRICAL CONTRACTOR TO FURNISH AND INSTALL ELECTRICAL CIRCUITS INCLUDING ALL CONDUIT, WIRE, CONNECTIONS AND BREAKER AT PANEL BOARD NECESSARY TO SERVE SIGNAGE.

C. GENERAL CONTRACTOR TO PROVIDE FIRE TREATED 2X WOOD BLOCKING OR EQUIVALENT FOR COMPLETE AND SECURE SUPPORT OF ANY WALL-MOUNTED EQUIPMENT, CABINETRY, FURNISHINGS, ARTWORK AND/OR SIGNAGE.

D. SIGNAGE CONTRACTOR SHALL VERIFY SIZE AND LOCATION OF ANY AND ALL ALLOWABLE MONUMENT OR POLE SIGNAGE AND PROVIDE SHOP DRAWING(S) PRIOR TO FABRICATION TO THE STARBUCKS DESIGNER FOR APPROVAL.

E. SIGNAGE CONTRACTOR TO INSTALL SIGNAGE IN COMPLIANCE WITH LOCAL CODES AND OBTAIN PERMIT.

F. SIGNAGE CONTRACTOR TO SUPPLY SHOP DRAWINGS TO CONSTRUCTION MANAGER AND TO THE GENERAL CONTRACTOR AS NEEDED. GENERAL CONTRACTOR TO NOTIFY CONSTRUCTION MANAGER IMMEDIATELY IF SHOP DRAWINGS OR INSTALLATION IS IN DISCREPANCY WITH ARCHITECTURAL DRAWINGS.

G. GENERAL CONTRACTOR TO CLEAN, PATCH AND REPAIR EXISTING EXTERIOR AS REQUIRED.

FOR REFERENCE ONLY

© 2022 STARBUCKS COFFEE COMPANY

STARBUCKS®
2401 UTAH AVENUE SOUTH
SEATTLE, WASHINGTON 98134
(206) 318-1575

THESE DRAWINGS AND THE PROJECT MANUAL ARE CONFIDENTIAL AND SHALL REMAIN THE SOLE PROPERTY OF STARBUCKS CORPORATION, WHICH IS THE OWNER OF THE COPYRIGHT IN THIS WORK. THEY SHALL NOT BE REPRODUCED (IN WHOLE OR IN PART), SHARED WITH THIRD PARTIES OR USED IN ANY MANNER ON OTHER PROJECTS OR EXTENSIONS TO THIS PROJECT WITHOUT THE PRIOR WRITTEN CONSENT OF STARBUCKS CORPORATION. THESE DRAWINGS AND SPECIFICATIONS ARE INTENDED TO EXPRESS DESIGN INTENT FOR A PROTOTYPICAL STARBUCKS STORE (WHICH IS SUBJECT TO CHANGE AT ANYTIME) AND DO NOT REFLECT ACTUAL SITE CONDITIONS. NEITHER PARTY SHALL HAVE ANY OBLIGATION NOR LIABILITY TO THE OTHER (EXCEPT STATED ABOVE) UNTIL A WRITTEN AGREEMENT IS FULLY EXECUTED BY BOTH PARTIES.

STARBUCKS TEMPLATE VERSION: i2023.04.24

Gensler
MAIN OFFICE
M. ARTHUR GENSLER JR. & ASSOCIATES
220 MONTGOMERY STREET, SUITE 200
SAN FRANCISCO, CA 94104 USA
Tel (415) 433.3700
Fax (415) 836.4599

SATELLITE OFFICE
M. ARTHUR GENSLER JR. & ASSOCIATES
FL QUALIFIER'S LIC. NO. AR96486
545 NW 26TH ST
SUITE 250
MIAMI, FL 33127 USA
Tel (305) 350.7070
Fax (305) 350.7071

PROJECT NAME:
ST LUCIE WEST & SW CASHEMERE BLVD

PROJECT ADDRESS:
920 SW SAINT LUCIE BLVD, PORT ST.LUCIE, FL 34986

STORE #:	81616
PROJECT #:	101357-001
ISSUE DATE:	07-08-2025
DESIGN MANAGER:	ASHLEY SUEIRAS
PRODUCTION DESIGNER:	GENSLER
CHECKED BY:	GENSLER

Revision Schedule

Rev	Date	By	Description
1	Date 1		Revision 1

SHEET TITLE:
BUILDING EXTERIOR ELEVATIONS
SCALE: AS SHOWN

SHEET NUMBER:
APX201

SIGNAGE SCHEDULE - "S"						
DESIGN ID	COUNT	DESCRIPTION	FURN. BY	INST. BY	BULB	COMMENTS
SIGNAGE						
23101	1	SIGN - DRIVE THRU ILLUMINATED FLUSH MOUNT GREEN - 6IN 150MM	SB	GC		WHITE LETTERS
SIGNAGE - DISK						
13163	1	SIGN - DISK SF ILLUMINATED FLUSH MOUNTED EVOLVED - 48IN 1220MM	SB	GC		
SIGNAGE - DRIVE THRU						
23074	1	SIGN - DIRECTIONAL EXIT ONLY ILLUM DS - NEW FOUNDATION - 44IN 1120MM	SB	GC		
23083	1	SIGN - DT DIRECTIONAL ARROW ILLUM DS - NEW FOUNDATION - 44IN 1120MM	SB	GC		
23111	1	SIGN - BREAKAWAY CLEARANCE BAR SQUARE FRAME FREESTANDING - GREEN	SB	GC		
SIGNAGE - OTHER						
21297	4	SIGN - 5 MINUTE PARKING	SB	GC		POST, IF REQUIRED, PROVIDED BY OTHERS
SIGNAGE - WORDMARK						
22616	1	SIGN - WORDMARK STARBUCKS FLUSH MOUNTED - 16IN 405MM - GREEN	SB	GC		GREEN LETTERS

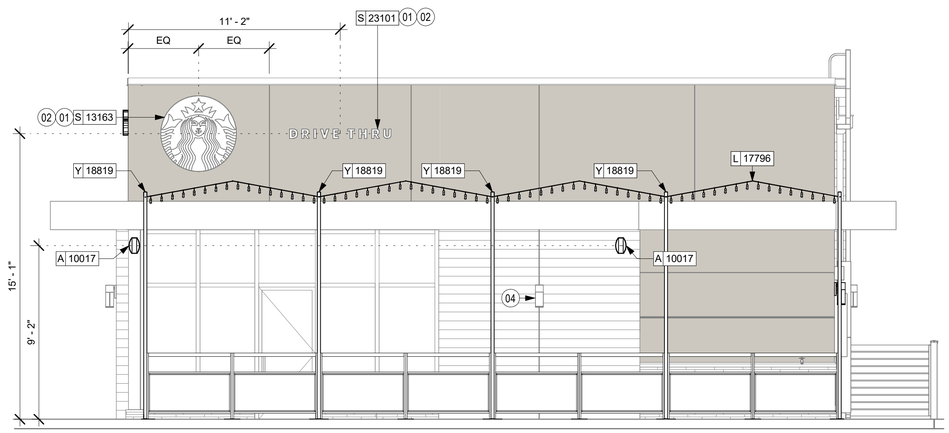

01 PATIO ELEVATION
Scale: 1/4" = 1'-0"

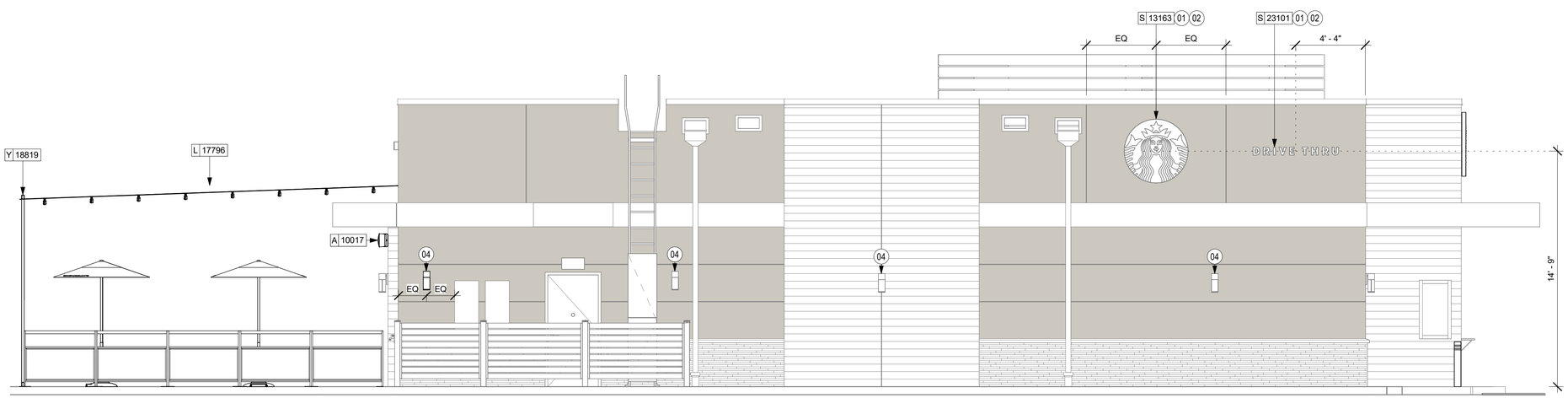

02 REAR DOOR ELEVATION
Scale: 1/4" = 1'-0"

KEYED NOTES

01 PROVIDE J-BOX FOR BUILDING SIGNAGE. COORDINATE LOCATION WITH SIGNAGE VENDOR SHOP DRAWINGS. PROVIDE SIGNAGE DISCONNECT ON INSIDE FACE OF WALL.

02 3/4" MARINE GRADE PLYWOOD BLOCKING FOR EXTERIOR SIGNAGE. EXTEND BLOCKING 8" (205MM) MIN. BEYOND EDGE OF SIGNAGE.EXISTING STOREFRONT DOOR AND/ OR WINDOW SYSTEM.

04 EXISTING EXTERIOR SCONCE.

GENERAL NOTES

A. GENERAL CONTRACTOR TO COORDINATE AND SCHEDULE SIGNAGE INSTALLATION WITH THE SIGNAGE CONTRACTOR PROVIDING A MINIMUM SCHEDULING NOTICE OF 4 WEEKS AND 1 WEEK PRIOR TO SCHEDULED DATE OF INSTALLATION. CONSTRUCTION MANAGER TO PROVIDE GENERAL CONTRACTOR WITH SIGNAGE CONTRACTOR CONTACT INFORMATION.

B. GENERAL CONTRACTOR SHALL COORDINATE WITH ELECTRICAL CONTRACTOR TO FURNISH AND INSTALL ELECTRICAL CIRCUITS INCLUDING ALL CONDUIT, WIRE, CONNECTIONS AND BREAKER AT PANEL BOARD NECESSARY TO SERVE SIGNAGE.

C. GENERAL CONTRACTOR TO PROVIDE FIRE TREATED 2X WOOD BLOCKING OR EQUIVALENT FOR COMPLETE AND SECURE SUPPORT OF ANY WALL-MOUNTED EQUIPMENT, CABINETRY, FURNISHINGS, ARTWORK AND/OR SIGNAGE.

D. SIGNAGE CONTRACTOR SHALL VERIFY SIZE AND LOCATION OF ANY AND ALL ALLOWABLE MONUMENT OR POLE SIGNAGE AND PROVIDE SHOP DRAWING(S) PRIOR TO FABRICATION TO THE STARBUCKS DESIGNER FOR APPROVAL.

E. SIGNAGE CONTRACTOR TO INSTALL SIGNAGE IN COMPLIANCE WITH LOCAL CODES AND OBTAIN PERMIT.

F. SIGNAGE CONTRACTOR TO SUPPLY SHOP DRAWINGS TO CONSTRUCTION MANAGER AND TO THE GENERAL CONTRACTOR AS NEEDED. GENERAL CONTRACTOR TO NOTIFY CONSTRUCTION MANAGER IMMEDIATELY IF SHOP DRAWINGS OR INSTALLATION IS IN DISCREPANCY WITH ARCHITECTURAL DRAWINGS.

G. GENERAL CONTRACTOR TO CLEAN, PATCH AND REPAIR EXISTING EXTERIOR AS REQUIRED.

FOR REFERENCE ONLY

© 2022 STARBUCKS COFFEE COMPANY

STARBUCKS®
2401 UTAH AVENUE SOUTH
SEATTLE, WASHINGTON 98134
(206) 318-1575

THESE DRAWINGS AND THE PROJECT MANUAL ARE CONFIDENTIAL AND SHALL REMAIN THE SOLE PROPERTY OF STARBUCKS CORPORATION, WHICH IS THE OWNER OF THE COPYRIGHT IN THIS WORK. THEY SHALL NOT BE REPRODUCED (IN WHOLE OR IN PART), SHARED WITH THIRD PARTIES OR USED IN ANY MANNER ON OTHER PROJECTS OR EXTENSIONS TO THIS PROJECT WITHOUT THE PRIOR WRITTEN CONSENT OF STARBUCKS CORPORATION. THESE DRAWINGS AND SPECIFICATIONS ARE INTENDED TO EXPRESS DESIGN INTENT FOR A PROTOTYPICAL STARBUCKS STORE (WHICH IS SUBJECT TO CHANGE AT ANYTIME) AND DO NOT REFLECT ACTUAL SITE CONDITIONS. NEITHER PARTY SHALL HAVE ANY OBLIGATION NOR LIABILITY TO THE OTHER (EXCEPT STATED ABOVE) UNTIL A WRITTEN AGREEMENT IS FULLY EXECUTED BY BOTH PARTIES.

STARBUCKS TEMPLATE VERSION: i2023.04.24

Gensler
MAIN OFFICE
M. ARTHUR GENSLER JR. & ASSOCIATES
220 MONTGOMERY STREET, SUITE 200
SAN FRANCISCO, CA 94104 USA
Tel (415) 433.3700
Fax (415) 836.4599

SATELLITE OFFICE
M. ARTHUR GENSLER JR. & ASSOCIATES
FL QUALIFIER'S LIC. NO. AR96486
545 NW 26TH ST
SUITE 250
MIAMI, FL 33127 USA
Tel (305) 350.7070
Fax (305) 350.7071

PROJECT NAME:
ST LUCIE WEST & SW CASHEMERE BLVD

PROJECT ADDRESS:
920 SW SAINT LUCIE BLVD, PORT ST.LUCIE, FL 34986

STORE #:	81616
PROJECT #:	101357-001
ISSUE DATE:	07-08-2025
DESIGN MANAGER:	ASHLEY SUEIRAS
PRODUCTION DESIGNER:	GENSLER
CHECKED BY:	GENSLER

Revision Schedule

Rev	Date	By	Description
1	Date 1		Revision 1

SHEET TITLE:
BUILDING EXTERIOR ELEVATIONS
SCALE: AS SHOWN

SHEET NUMBER:
APX202

NOTE:
THIS SHEET IS FOR REFERENCE ONLY.
WORK PERFORMED UNDER A SEPARATE PERMIT,
REFER TO LL SITE DRAWINGS.

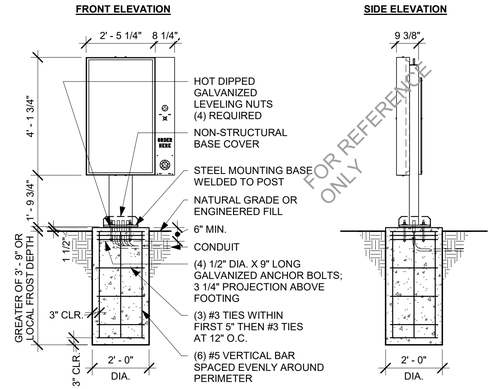

G.C. RESPONSIBLE FOR FOUNDATIONS AND FOOTINGS ON ALL MENU BOARD AND DRIVE THRU ELEMENTS. SIGNAGE VENDOR TO SUPPLY TEMPLATES AND INSTALL MENU BOARDS ONLY.

SITE-SPECIFIC FOOTING ENGINEERING REQUIRED BY LICENSED ENGINEER

01 DTE DOS POST GROUND FOOTING
Scale: 3/8" = 1'-0"

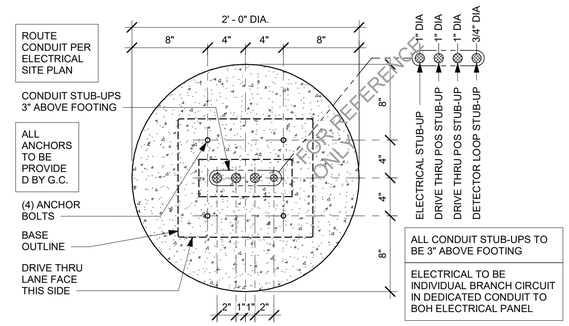

SITE-SPECIFIC FOOTING ENGINEERING REQUIRED BY LICENSED ENGINEER

02 DTE DOS POST BOLT PATTERN (TOP VIEW)
Scale: 1 1/2" = 1'-0"

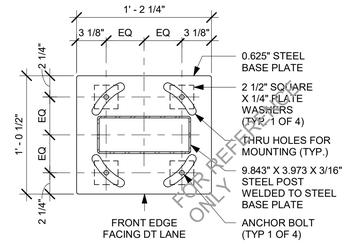

03 DTE DOS POST BASE PLATE
Scale: 1 1/2" = 1'-0"

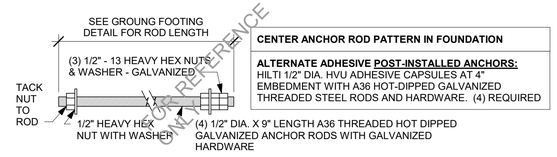

SITE-SPECIFIC FOOTING ENGINEERING REQUIRED BY LICENSED ENGINEER

04 DTE DOS POST ANCHOR ROD
Scale: 3" = 1'-0"

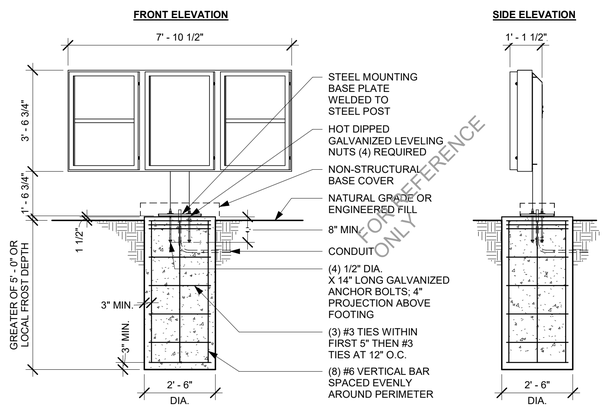

G.C. RESPONSIBLE FOR FOUNDATIONS AND FOOTINGS ON ALL MENU BOARD AND DRIVE THRU ELEMENTS. SIGNAGE VENDOR TO SUPPLY TEMPLATES AND INSTALL MENU BOARDS ONLY.

SITE-SPECIFIC FOOTING ENGINEERING REQUIRED BY LICENSED ENGINEER

05 DT 5-PANEL MENU BOARD GROUND FOOTING
Scale: 3/8" = 1'-0"

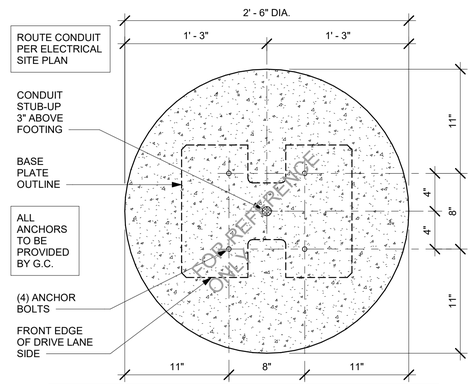

SITE-SPECIFIC FOOTING ENGINEERING REQUIRED BY LICENSED ENGINEER

06 DTE 5-PANEL MENU BOARD BOLT PATTERN (TOP VIEW)
Scale: 1 1/2" = 1'-0"

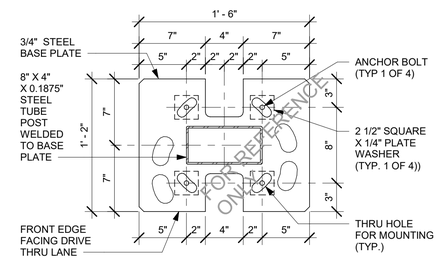

07 DTE 5-PANEL MENU BOARD BASE PLATE
Scale: 1 1/2" = 1'-0"

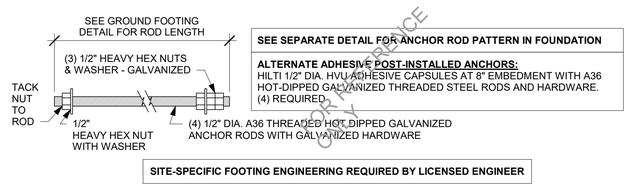

SITE-SPECIFIC FOOTING ENGINEERING REQUIRED BY LICENSED ENGINEER

08 DTE 5-PANEL MENU BOARD ANCHOR ROD
Scale: 3" = 1'-0"

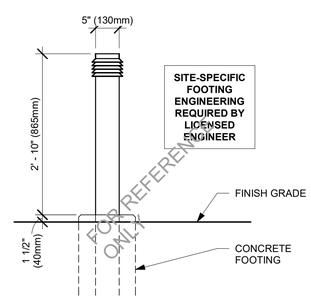

09 DTE - ILLUMINATED BOLLARD
Scale: 3/4" = 1'-0"

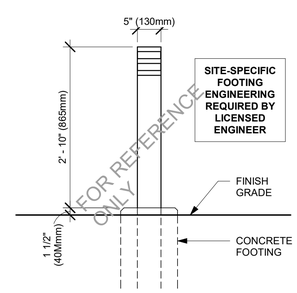

10 DTE - NON-ILLUMINATED BOLLARD
Scale: 3/4" = 1'-0"

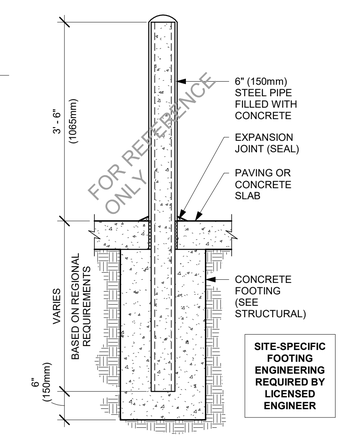

11 SITE - GENERAL BOLLARD DETAIL
Scale: 3/4" = 1'-0"

FOR REFERENCE ONLY

© 2022 STARBUCKS COFFEE COMPANY

STARBUCKS®
2401 UTAH AVENUE SOUTH
SEATTLE, WASHINGTON 98134
(206) 318-1575

THESE DRAWINGS AND THE PROJECT MANUAL ARE CONFIDENTIAL AND SHALL REMAIN THE SOLE PROPERTY OF STARBUCKS CORPORATION, WHICH IS THE OWNER OF THE COPYRIGHT IN THIS WORK. THEY SHALL NOT BE REPRODUCED (IN WHOLE OR IN PART), SHARED WITH THIRD PARTIES OR USED IN ANY MANNER ON OTHER PROJECTS OR EXTENSIONS TO THIS PROJECT WITHOUT THE PRIOR WRITTEN CONSENT OF STARBUCKS CORPORATION. THESE DRAWINGS AND SPECIFICATIONS ARE INTENDED TO EXPRESS DESIGN INTENT FOR A PROTOTYPICAL STARBUCKS STORE (WHICH IS SUBJECT TO CHANGE AT ANYTIME) AND DO NOT REFLECT ACTUAL SITE CONDITIONS. NEITHER PARTY SHALL HAVE ANY OBLIGATION NOR LIABILITY TO THE OTHER (EXCEPT STATED ABOVE) UNTIL A WRITTEN AGREEMENT IS FULLY EXECUTED BY BOTH PARTIES.

STARBUCKS TEMPLATE VERSION: i2023.04.24

Gensler

MAIN OFFICE
M. ARTHUR GENSLER JR. & ASSOCIATES
220 MONTGOMERY STREET, SUITE 200
SAN FRANCISCO, CA 94104 USA
Tel (415) 433.3700
Fax (415) 836.4599

SATELLITE OFFICE
M. ARTHUR GENSLER JR. & ASSOCIATES
FL QUALIFIER'S LIC. NO. AR96486
545 NW 26TH ST
SUITE 250
MIAMI, FL 33127 USA
Tel (305) 350.7070
Fax (305) 350.7071

PROJECT NAME:
ST LUCIE WEST & SW CASHEMERE BLVD

PROJECT ADDRESS:
920 SW SAINT LUCIE BLVD, PORT ST.LUCIE, FL 34986

STORE #:	81616
PROJECT #:	101357-001
ISSUE DATE:	07-08-2025
DESIGN MANAGER:	ASHLEY SUEIRAS
PRODUCTION DESIGNER:	GENSLER
CHECKED BY:	GENSLER

Revision Schedule

Rev	Date	By	Description
1	Date 1		Revision 1

SHEET TITLE:
ARCHITECTURAL SITE DETAILS
SCALE: AS SHOWN

SHEET NUMBER:
APX501

NOTE:
THIS SHEET IS FOR REFERENCE ONLY.
WORK PERFORMED UNDER A SEPARATE PERMIT,
REFER TO LL SITE DRAWINGS.

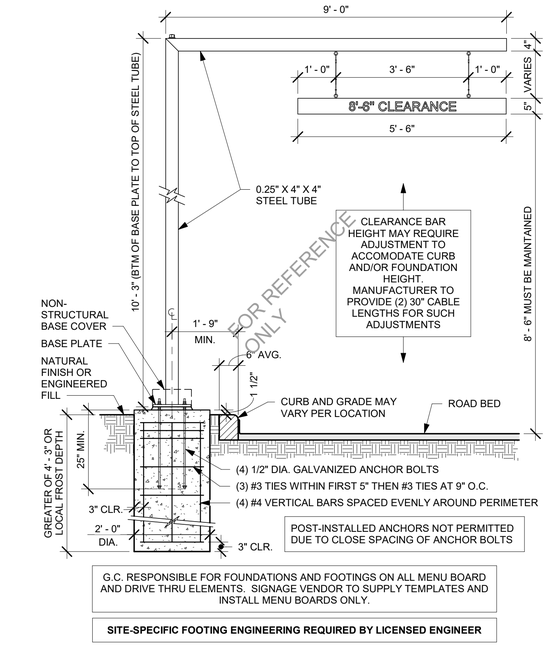

01 DTE CLEARANCE BAR GROUND FOOTING
Scale: 1/2" = 1'-0"

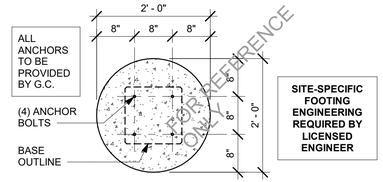

02 DTE CLEARANCE BAR BOLT PATTERN (TOP VIEW)
Scale: 3/4" = 1'-0"

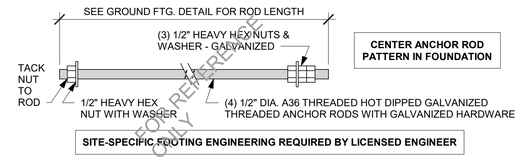

03 DTE CLEARANCE BAR ANCHOR ROD
Scale: 3" = 1'-0"

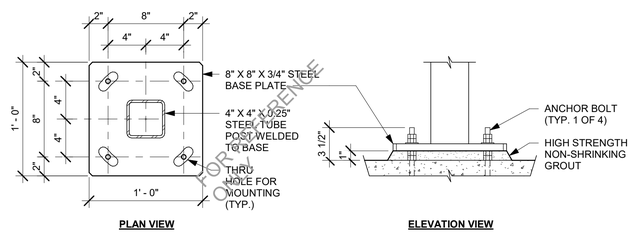

04 DTE CLEARANCE BAR BASE PLATE
Scale: 1 1/2" = 1'-0"

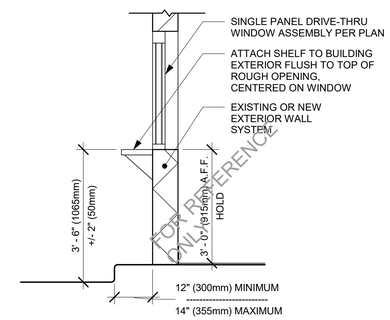

05 DRIVE THRU WINDOW
Scale: 1/2" = 1'-0"

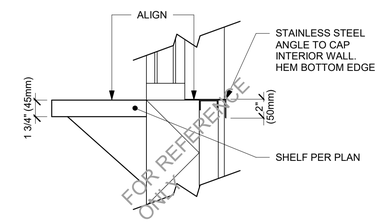

06 DRIVE THRU SHELF
Scale: 1 1/2" = 1'-0"

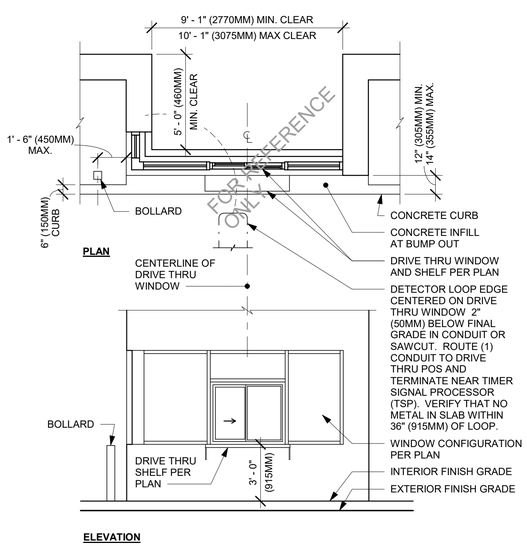

07 DTE - DRIVE THRU WINDOW BUMP-OUT
Scale: 1/4" = 1'-0"

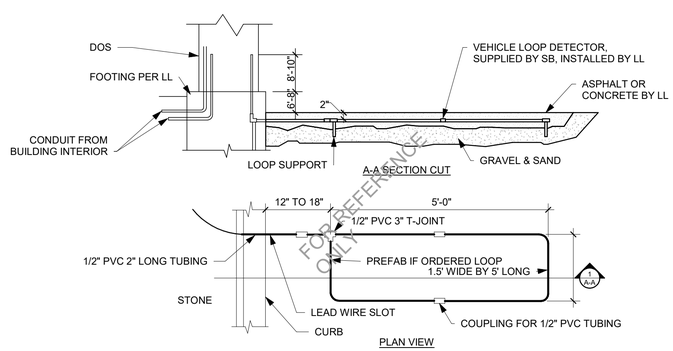

08 DT - SENSOR LOOP AT ORDER POINT - BY LL
Scale: 3/8" = 1'-0"

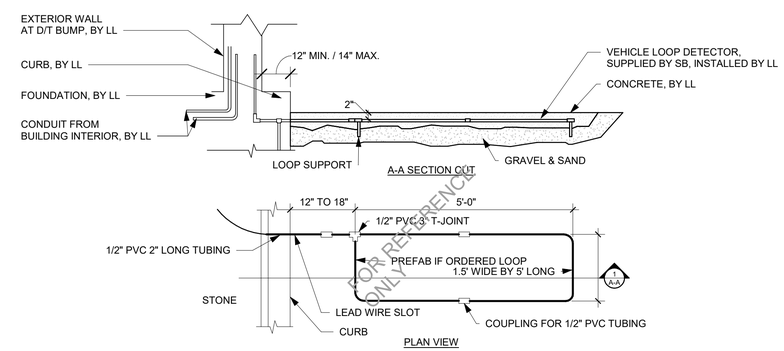

09 DT - SENSOR LOOP AT DT BUMP - BY LL
Scale: 3/8" = 1'-0"

FOR REFERENCE ONLY

© 2022 STARBUCKS COFFEE COMPANY

STARBUCKS®
2401 UTAH AVENUE SOUTH
SEATTLE, WASHINGTON 98134
(206) 318-1575

THESE DRAWINGS AND THE PROJECT MANUAL ARE CONFIDENTIAL AND SHALL REMAIN THE SOLE PROPERTY OF STARBUCKS CORPORATION, WHICH IS THE OWNER OF THE COPYRIGHT IN THIS WORK. THEY SHALL NOT BE REPRODUCED (IN WHOLE OR IN PART), SHARED WITH THIRD PARTIES OR USED IN ANY MANNER ON OTHER PROJECTS OR EXTENSIONS TO THIS PROJECT WITHOUT THE PRIOR WRITTEN CONSENT OF STARBUCKS CORPORATION. THESE DRAWINGS AND SPECIFICATIONS ARE INTENDED TO EXPRESS DESIGN INTENT FOR A PROTOTYPICAL STARBUCKS STORE (WHICH IS SUBJECT TO CHANGE AT ANYTIME) AND DO NOT REFLECT ACTUAL SITE CONDITIONS. NEITHER PARTY SHALL HAVE ANY OBLIGATION NOR LIABILITY TO THE OTHER (EXCEPT STATED ABOVE) UNTIL A WRITTEN AGREEMENT IS FULLY EXECUTED BY BOTH PARTIES.

STARBUCKS TEMPLATE VERSION: i2023.04.24

FOR REFERENCE ONLY

Gensler
MAIN OFFICE
M. ARTHUR GENSLER JR. & ASSOCIATES
220 MONTGOMERY STREET, SUITE 200
SAN FRANCISCO, CA 94104 USA
Tel (415) 433.3700
Fax (415) 836.4599

SATELLITE OFFICE
M. ARTHUR GENSLER JR. & ASSOCIATES
FL QUALIFIER'S LIC. NO. AR96486
545 NW 26TH ST
SUITE 250
MIAMI, FL 33127 USA
Tel (305) 350.7070
Fax (305) 350.7071

PROJECT NAME:
ST LUCIE WEST & SW CASHEMERE BLVD

PROJECT ADDRESS:
920 SW SAINT LUCIE BLVD, PORT ST.LUCIE, FL 34986

STORE #:	81616
PROJECT #:	101357-001
ISSUE DATE:	07-08-2025
DESIGN MANAGER:	ASHLEY SUEIRAS
PRODUCTION DESIGNER:	GENSLER
CHECKED BY:	GENSLER

Revision Schedule

Rev	Date	By	Description

SHEET TITLE:
ARCHITECTURAL SITE DETAILS
SCALE: AS SHOWN

SHEET NUMBER:
APX502

NOTE:
THIS SHEET IS FOR REFERENCE ONLY.
WORK PERFORMED UNDER A SEPARATE PERMIT,
REFER TO LL SITE DRAWINGS.

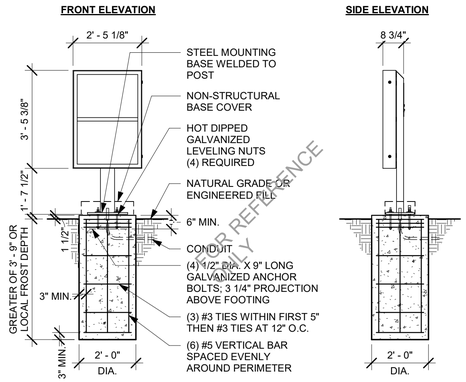

G.C. RESPONSIBLE FOR FOUNDATIONS AND FOOTINGS ON ALL MENU BOARD AND DRIVE THRU ELEMENTS. SIGNAGE VENDOR TO SUPPLY TEMPLATES AND INSTALL MENU BOARDS ONLY.

SITE-SPECIFIC FOOTING ENGINEERING REQUIRED BY LICENSED ENGINEER

01 DTE PRE-MENU GROUND FOOTING

Scale: 3/8" = 1'-0"

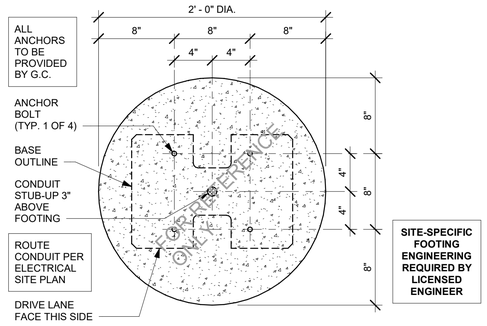

02 DTE PRE-MENU BOLT PATTERN (TOP VIEW)

Scale: 1 1/2" = 1'-0"

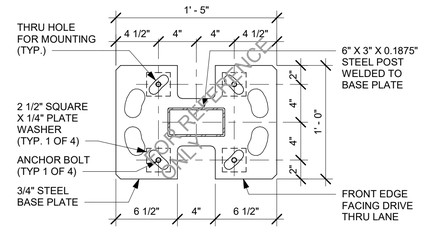

03 DTE PRE-MENU BASE PLATE

Scale: 1 1/2" = 1'-0"

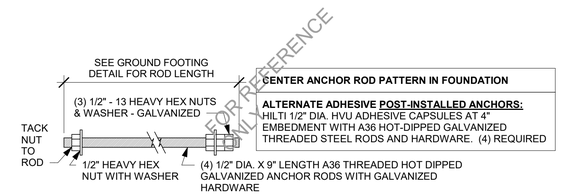

SITE-SPECIFIC FOOTING ENGINEERING REQUIRED BY LICENSED ENGINEER

04 DTE PRE-MENU ANCHOR ROD

Scale: 3" = 1'-0"

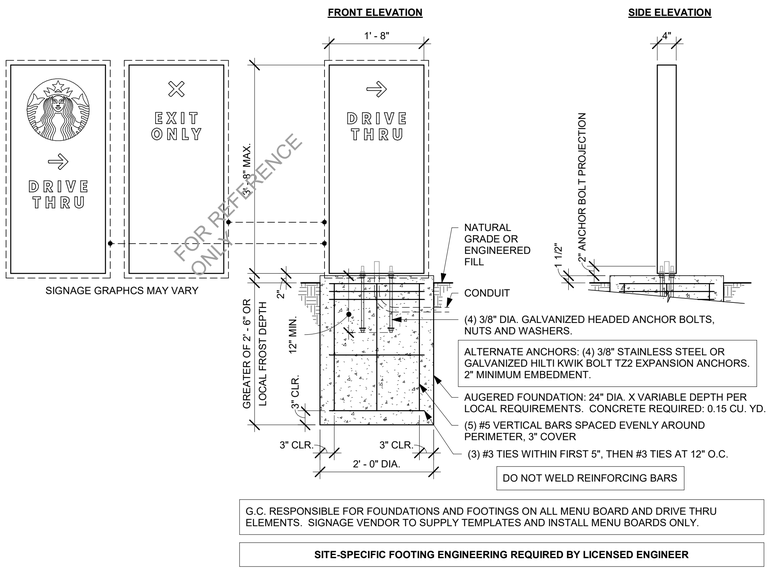

G.C. RESPONSIBLE FOR FOUNDATIONS AND FOOTINGS ON ALL MENU BOARD AND DRIVE THRU ELEMENTS. SIGNAGE VENDOR TO SUPPLY TEMPLATES AND INSTALL MENU BOARDS ONLY.

SITE-SPECIFIC FOOTING ENGINEERING REQUIRED BY LICENSED ENGINEER

05 DTE DIRECTIONAL SIGNAGE GROUND FOOTING

Scale: 3/4" = 1'-0"

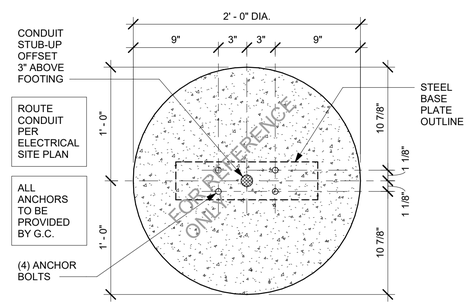

SITE-SPECIFIC FOOTING ENGINEERING REQUIRED BY LICENSED ENGINEER

06 DTE DIRECTIONAL SIGNAGE BOLT PATTERN (TOP VIEW)

Scale: 1 1/2" = 1'-0"

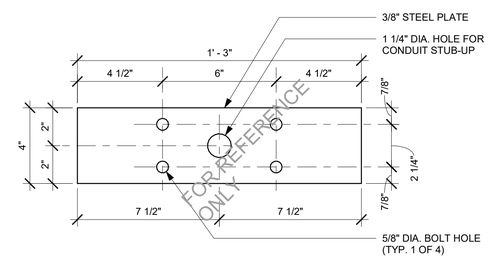

07 DTE DIRECTIONAL SIGNAGE BASE PLATE

Scale: 3" = 1'-0"

FOR REFERENCE ONLY

© 2022 STARBUCKS COFFEE COMPANY

STARBUCKS®
2401 UTAH AVENUE SOUTH
SEATTLE, WASHINGTON 98134
(206) 318-1575

THESE DRAWINGS AND THE PROJECT MANUAL ARE CONFIDENTIAL AND SHALL REMAIN THE SOLE PROPERTY OF STARBUCKS CORPORATION, WHICH IS THE OWNER OF THE COPYRIGHT IN THIS WORK. THEY SHALL NOT BE REPRODUCED (IN WHOLE OR IN PART), SHARED WITH THIRD PARTIES OR USED IN ANY MANNER ON OTHER PROJECTS OR EXTENSIONS TO THIS PROJECT WITHOUT THE PRIOR WRITTEN CONSENT OF STARBUCKS CORPORATION. THESE DRAWINGS AND SPECIFICATIONS ARE INTENDED TO EXPRESS DESIGN INTENT FOR A PROTOTYPICAL STARBUCKS STORE (WHICH IS SUBJECT TO CHANGE AT ANYTIME) AND DO NOT REFLECT ACTUAL SITE CONDITIONS. NEITHER PARTY SHALL HAVE ANY OBLIGATION NOR LIABILITY TO THE OTHER (EXCEPT STATED ABOVE) UNTIL A WRITTEN AGREEMENT IS FULLY EXECUTED BY BOTH PARTIES.

STARBUCKS TEMPLATE VERSION: i2023.04.24

Gensler

MAIN OFFICE
M. ARTHUR GENSLER JR. & ASSOCIATES
220 MONTGOMERY STREET, SUITE 200
SAN FRANCISCO, CA 94104 USA
Tel (415) 433.3700
Fax (415) 836.4599

SATELLITE OFFICE
M. ARTHUR GENSLER JR. & ASSOCIATES
FL QUALIFIER'S LIC. NO. AR96486
545 NW 26TH ST
SUITE 250
MIAMI, FL 33127 USA
Tel (305) 350.7070
Fax (305) 350.7071

PROJECT NAME:
ST LUCIE WEST & SW CASHEMERE BLVD

PROJECT ADDRESS:
920 SW SAINT LUCIE BLVD, PORT ST.LUCIE, FL 34986

STORE #:	81616
PROJECT #:	101357-001
ISSUE DATE:	07-08-2025
DESIGN MANAGER:	ASHLEY SUEIRAS
PRODUCTION DESIGNER:	GENSLER
CHECKED BY:	GENSLER

Revision Schedule

Rev	Date	By	Description
1	Date 1		Revision 1

SHEET TITLE:
ARCHITECTURAL SITE DETAILS
SCALE: AS SHOWN

SHEET NUMBER:
APX503